PG&E PROJECT # 31471119
COUNTY OF SAN MATEO
INSTALLATION OF ELECTRIC VEHICLE LEVEL 2 CHARGING EQUIPMENT
555 COUNTY CENTER, REDWOOD CITY, CA 94063

SITE INFORMATION

EV SITE ADDRESS:
555 COUNTY CENTER,
REDWOOD CITY, CA 94063

PROPERTY OWNER:
COUNTY OF SAN MATEO
555 COUNTY CENTER,
REDWOOD CITY, CA 94063
(650) 363-4343

POWER COMPANY:
PG&E

COUNTY:
SAN MATEO

LATITUDE (NAD83):
37° 29' 20.3928" N
37.48899800°

LONGITUDE (NAD83):
122° 13' 47.607" W
-122.22989120°

APPLICABLE CODES

ALL WORK SHALL COMPLY WITH THE FOLLOWING APPLICABLE CODES:

2019 CALIFORNIA BUILDING CODE
2019 CALIFORNIA ELECTRICAL CODE
2017 NATIONAL ELECTRICAL CODE

IN THE EVENT OF CONFLICT, THE MOST RESTRICTIVE CODE SHALL PREVAIL

PROJECT TEAM

LEAD CIVIL ENGINEER:
DAVID MOWRY
(559) 326-1400
DMOWRY@BCF-ENGR.COM

LEAD ELECTRICAL ENGINEER:
BRIAN DUFFY
(559) 326-1400
BDUFFY@BCF-ENGR.COM

PG&E PROJECT MANAGER
JUSTIN CHEUNG
(408) 482-7231
JW1V@PGE.COM

CEI PROJECT MANAGER
OMAR GONZALEZ
(408) 799-4065
OMAR_GONZALEZ@CEI.COM

FLOOD HAZARD AREA NOTE

1. PROJECT SITE LOCATED WITHIN FLOOD HAZARD ZONE X (0.2 PCT ANNUAL CHANCE FLOOD HAZARD) AND 'ZONE AE' (WITH BASE FLOOD ELEVATION OF 10')
2. FIRM PANEL: 06081C0301F
3. MAP EFFECTIVE DATE: APRIL 5, 2019
4. MAP IS COUNTYWIDE, PANEL PRINTED
5. UTILITY METER INSTALLED INSIDE OF THE PARKING GARAGE AND WITHIN FLOOD ZONE X.
6. LEVEL 2 EV CHARGES INSTALLED ON THE 2ND, 3RD, AND 4TH LEVEL OF THE PARKING GARAGE ABOVE THE BASE FLOOD ELEVATION OF 10'.
7. SEE SHEET C1.1 FOR FLOOD ZONE BOUNDARIES.

CONTRACTOR NOTE

CONTRACTOR SHALL COMPLETE INSTALL PER THE SIGNED AND THE SEALED SET OF DRAWINGS. ANY NECESSARY DEVIATIONS FROM THE DRAWINGS MUST BE SUBMITTED THROUGH AN RFI REQUEST PROCESS WITH ENGINEERING FOR AN APPROVAL PRIOR TO CONTRACTOR PROCEEDING WITH A DEVIATION OF THE SIGNED AND SEALED SET OF DRAWINGS.

AREA MAP

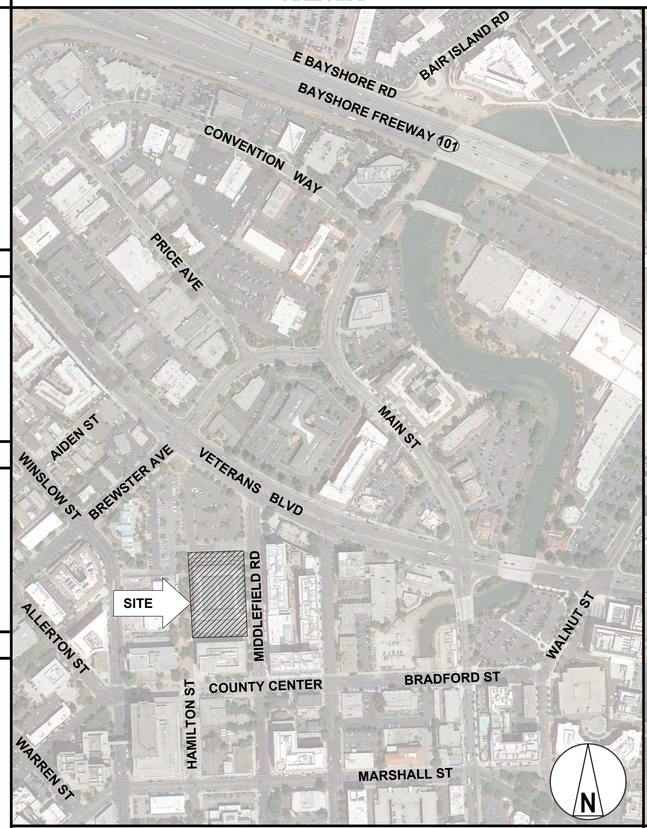

LOCATION MAP

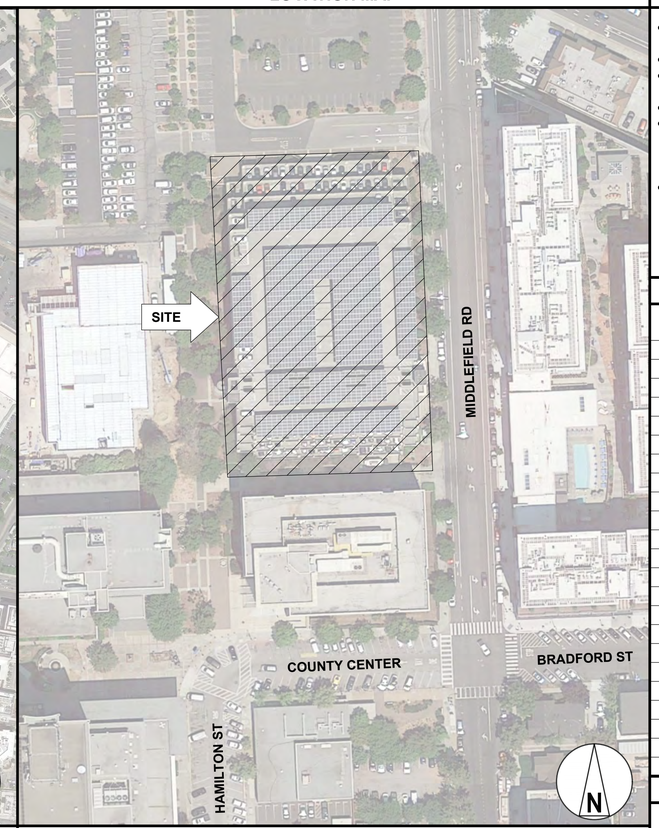

PROJECT DESCRIPTION

- INSTALL (60) LEVEL 2 CHARGING PORTS FOR USE BY FLEET VEHICLES ONLY
- INSTALL (1) UTILITY METER
- IMPACTED EXISTING PARKING = 60 TOTAL SPACES; 60 STANDARD SPACES
- PROPOSED CHARGING = 60 TOTAL SPACES; 60 STANDARD EVSE
- CBC 11B-228.3.2 EXCEPTION #1: EVCS NOT AVAILABLE TO THE GENERAL PUBLIC AND INTENDED FOR USE BY A DESIGNATED VEHICLE OR DRIVER SHALL NOT BE REQUIRED TO COMPLY WITH CBC SECTION 11B-228.3.2
- NO POWER RESTORE FUNCTIONALITY AND NO HAZMAT CONCERNS.

DRAWING INDEX

SHEET NO:	SHEET TITLE	REV NO:
T1.0	TITLE SHEET & PROJECT DATA	0
T2.0	GENERAL NOTES	0
T2.1	GENERAL NOTES	0
C1.0	OVERALL SITE PLAN	0
C1.1	ENLARGED SITE PLAN - GROUND LEVEL	0
C1.2	ENLARGED SITE PLAN - SECOND LEVEL	0
C1.3	ENLARGED SITE PLAN - THIRD LEVEL	0
C1.4	ENLARGED SITE PLAN - FOURTH LEVEL	0
E1.0	ELECTRICAL PLAN - GROUND LEVEL	0
E1.1	ELECTRICAL PLAN - SECOND LEVEL	0
E1.2	ELECTRICAL PLAN - THIRD LEVEL	0
E1.3	ELECTRICAL PLAN - FOURTH LEVEL	0
E1.4	SINGLE LINE DIAGRAM	0
E2.0	ELECTRICAL DETAILS - PANEL A	0
E2.1	ELECTRICAL DETAILS - PANEL B	0
E2.2	ELECTRICAL DETAILS - PANEL C	0
E2.3	ELECTRICAL DETAILS - PANEL D	0
E2.4	ELECTRICAL DETAILS	0
S1.0	EQUIPMENT DETAILS	0
S1.1	EQUIPMENT DETAILS	0
R1.0	REFERENCE DRAWINGS	0
R1.1	REFERENCE DRAWINGS	0
R2.0	TITLE 24 DOCUMENT	0

ZONING INFORMATION

PERMITTING JURISDICTION: CITY OF REDWOOD CITY

ZONING DISTRICT: P (PLANNED COMMUNITY DISTRICT)

ENGINEER OF RECORD

CIVIL
DAVID MOWRY
PE # 54,414
BLAIR CHURCH & FLYNN
CONSULTING ENGINEERS

ELECTRICAL
BRIAN DUFFY
PE # E 22220
BLAIR CHURCH & FLYNN
CONSULTING ENGINEERS

CALL BEFORE YOU DIG

UNDERGROUND SERVICE ALERT
UTILITY NOTIFICATION CENTER OF CALIFORNIA
811 OR 1-800-227-2600

3 WORKING DAYS UTILITY NOTIFICATION PRIOR TO CONSTRUCTION

DO NOT SCALE DRAWINGS

CONTRACTOR SHALL VERIFY ALL PLANS, EXISTING DIMENSIONS & CONDITIONS ON THE JOB SITE & SHALL IMMEDIATELY NOTIFY THE ENGINEER IN WRITING OF ANY DISCREPANCIES BEFORE PROCEEDING WITH THE WORK.

PACIFIC GAS AND ELECTRIC COMPANY
P.O. BOX 997300
SACRAMENTO, CA 95899-7300

CUPERTINO ELECTRIC
1132 NORTH 7TH STREET
SAN JOSE, CA 95112
(408)808-8000
C-10 LIC.NO. 174637

CONSULTANT
Blair, Church & Flynn
Consulting Engineers
4561 Clovis Avenue,
Suite 200
Clovis, California 93612
Tel (559) 326-1400
Fax (559) 326-1500

PROJECT NO:	19-1-22141-00
DRAWN BY:	ERIK OROZCO
CHECKED BY:	ROBERT FRANCIS

REV	DATE	DESCRIPTION
0	04/27/2020	ISSUED FOR 100% REVIEW

REGISTERED PROFESSIONAL ENGINEER
DAVID A. MOWRY
No. 54,414
CIVIL
STATE OF CALIFORNIA
Date Signed:

REGISTERED PROFESSIONAL ENGINEER
BRIAN M. DUFFY
No. E22220
ELECTRICAL
STATE OF CALIFORNIA
Date Signed:

NOT TO BE USED FOR CONSTRUCTION

IT IS A VIOLATION OF LAW FOR ANY PERSON, UNLESS THEY ARE ACTING UNDER THE DIRECTION OF A LICENSED PROFESSIONAL ENGINEER, TO ALTER THIS DOCUMENT.

PG&E ACCEPTANCE STAMP

PG&E PROJECT # 31471119
COUNTY OF SAN MATEO
555 COUNTY CENTER,
REDWOOD CITY, CA 94063

SHEET TITLE
TITLE SHEET & PROJECT DATA

SHEET NUMBER
T1.0

ABBREVIATIONS

1P	ONE POLE (2,3,4 APPLICABLE)
A	AMPERE
AC	ALTERNATING CURRENT
AT	AMPERE TRIP (RATING)
ATS	AUTOMATIC TRANSFER SWITCH
AWG	AMERICAN WIRE GAUGE
BIL	BASIC IMPULSE LEVEL
C	CONDUIT
CBC	CALIFORNIA BUILDING CODE
CEC	CALIFORNIA ELECTRICAL CODE OR CALIFORNIA ENERGY COMMISSION
CMIL	CIRCULAR MIL
CT	CURRENT TRANSFORMER
DC	DIRECT CURRENT
EGC	EQUIPMENT GROUNDING CONDUCTOR
EMT	ELECTRICAL METALLIC TUBING
EPR	ETHYLENE PROPYLENE RUBBER
EVCS	ELECTRIC VEHICLE CHARGING STATION
FBO	FURNISHED BY OTHERS
FLA	FULL LOAD AMPS
FO	FIBER OPTIC
FT	FEET
FWE	FURNISHED WITH EQUIPMENT
GEC	GROUND ELECTRODE CONDUCTOR
GFCI	GROUND FAULT CIRCUIT INTERRUPTER
G, GND	GROUND
IMC	INTERMEDIATE METAL CONDUIT
ISC	SHORT CIRCUIT CURRENT
kAIC	KILOAMPERE INTERRUPTING CAPACITY
KV	KILO VOLT
KVA	KILOVOLTAMPERE
KW	KILO WATTS
KWH	KILOWATTHOUR
LB	POUND
LSIG	ELECTRONIC TRIP DEVICE
L	LONG TIME TRIP
S	SHORT TIME TRIP
I	INSTANTANEOUS
G	GROUND FAULT TRIP
A	GROUND FAULT ALARM
L-G	LINE TO GROUND VOLTAGE
L-L	LINE TO LINE VOLTAGE
L-N	LINE TO NEUTRAL VOLTAGE
M	METER
MBJ	MAIN BONDING JUMPER
MCB	MAIN CIRCUIT BREAKER
MLO	MAIN LUG ONLY
MVA	MEGA VOLT AMPERE
N	NEUTRAL
NEC	NATIONAL ELECTRICAL CODE
NTS	NOT TO SCALE
OH	OVERHEAD
PB	PULLBOX
PT	POTENTIAL TRANSFORMER
PVC	POLYVINYL CHLORIDE (FOR CONDUIT)
R	RELAY
RGS	RIGID STEEL CONDUIT
SCCR	SHORT-CIRCUIT CURRENT RATING
SCH	SCHEDULE (FOR CONDUIT)
SLD	SINGLE LINE DIAGRAM
SSBJ	SUPPLY SIDE BONDING JUMPER
SPD	SURGE PROTECTIVE DEVICE
SW	SWITCH
SWGR	SWITCHGEAR
TYP	TYPICAL
UG	UNDERGROUND
V	VOLT

LINETYPES

	BUS (PHASE, NEUTRAL, OR GROUND) "N" INDICATES NEUTRAL BUS, "G" INDICATES GROUND BUS
	CONDUIT CAP
	CONTINUATION
P	PRIMARY LINE (P)
S	SECONDARY LINE (P)
FO	FIBER OPTIC LINE (P)
C	COMMUNICATION LINE (P)
LV	LOW VOLTAGE LINE (P)
CS	CAT5 CABLE LINE (P)
U	UTILITY LINE
S&C	SECONDARY (P) AND COMMUNICATION (P)
	FLOOD ZONE BOUNDARY LINE

SYMBOLS

- STEP DOWN TRANSFORMER
- FIXED MOUNT CIRCUIT BREAKER
- DISCONNECT SWITCH
- FUSED DISCONNECT SWITCH
- FUSE
- METER
- LIGHT POLE
- ELECTRIC METER
- ELECTRIC BOX
- GUYWIRE
- UTILITY POLE
- TVL — TELEPHONE VAULT
- TELEPHONE PEDESTAL
- GAS METER
- SIGN
- FIRE HYDRANT
- BOLLARD
- SS — SANITARY MANHOLE
- CO — CLEANOUT
- STORM MANHOLE
- STORM INLET
- WATER VALVE
- ICV — IRRIGATION CONTROL VALVE
- WATER METER
- TELEPHONE MANHOLE
- CVL — CABLE TV VAULT
- TRAFFIC SIGNAL CONTROL BOX
- TRAFFIC DELINEATOR
- EXISTING TREE (CONIFEROUS)
- EXISTING TREE (DECIDUOUS)
- EXISTING BUSH

GENERAL CONSTRUCTION NOTES

1. FOR THE PURPOSE OF CONSTRUCTION DRAWINGS, THE FOLLOWING DEFINITIONS SHALL APPLY
   GENERAL CONTRACTOR.
   CONTRACTOR: (CONSTRUCTION)
   SPONSOR: PACIFIC GAS & ELECTRIC CO.
2. THE GENERAL CONTRACTOR SHALL VISIT THE SITE AND SHALL FAMILIARIZE THEMSELVES WITH ALL CONDITIONS AFFECTING THE PROPOSED WORK AND SHALL MAKE PROVISIONS. GENERAL CONTRACTOR SHALL BE RESPONSIBLE FOR FAMILIARIZING THEMSELVES WITH ALL CONTRACT DOCUMENTS, FIELD CONDITIONS, DIMENSIONS, AND CONFIRMING THAT THE WORK MAY BE ACCOMPLISHED AS SHOWN PRIOR TO PROCEEDING WITH CONSTRUCTION. ANY DISCREPANCIES SHALL BE BROUGHT TO THE ATTENTION OF THE ENGINEER PRIOR TO THE COMMENCEMENT OF WORK.
3. ALL MATERIALS FURNISHED AND INSTALLED SHALL BE IN STRICT ACCORDANCE WITH ALL APPLICABLE CODES, REGULATIONS, AND ORDINANCES. GENERAL CONTRACTOR SHALL ISSUE ALL APPROPRIATE NOTICES AND COMPLY WITH ALL LAWS, ORDINANCES, RULES, REGULATIONS, AND LAWFUL ORDERS OF ANY PUBLIC AUTHORITY REGARDING THE PERFORMANCE OF WORK.
4. ALL WORK CARRIED OUT SHALL COMPLY WITH ALL APPLICABLE MUNICIPAL AND UTILITY COMPANY SPECIFICATIONS AND LOCAL JURISDICTIONAL CODES, ORDINANCES, AND APPLICABLE REGULATIONS.
5. UNLESS NOTED OTHERWISE, THE WORK SHALL INCLUDE FURNISHING MATERIALS, EQUIPMENT, APPURTENANCES, AND LABOR NECESSARY TO COMPLETE ALL INSTALLATIONS AS INDICATED ON THE DRAWINGS.
6. PLANS ARE NOT TO BE SCALED. THESE PLANS ARE INTENDED TO BE A DIAGRAMMATIC OUTLINE ONLY UNLESS OTHERWISE NOTED. DIMENSIONS SHOWN ARE TO FINISH SURFACES UNLESS OTHERWISE NOTED. SPACING BETWEEN EQUIPMENT IS THE MINIMUM REQUIRED CLEARANCE. THEREFORE, IT IS CRITICAL TO FIELD VERIFY DIMENSIONS, SHOULD THERE BE ANY QUESTIONS REGARDING THE CONTRACT DOCUMENTS, THE CONTRACTOR SHALL BE RESPONSIBLE FOR OBTAINING A CLARIFICATION FROM THE ENGINEER PRIOR TO PROCEEDING WITH THE WORK. DETAILS ARE INTENDED TO SHOW DESIGN INTENT. MODIFICATIONS MAY BE REQUIRED TO SUIT JOB DIMENSIONS OR CONDITIONS AND SUCH MODIFICATIONS SHALL BE INCLUDED AS PART OF WORK AND PREPARED BY THE ENGINEER PRIOR TO PROCEEDING WITH WORK.
7. THE CONTRACTOR SHALL INSTALL ALL EQUIPMENT AND MATERIALS IN ACCORDANCE WITH MANUFACTURER'S RECOMMENDATIONS UNLESS SPECIFICALLY STATED OTHERWISE.
8. IF THE SPECIFIED EQUIPMENT CANNOT BE INSTALLED AS SHOWN ON THESE DRAWINGS, THE CONTRACTOR SHALL PROPOSE AN ALTERNATIVE INSTALLATION SPACE FOR APPROVAL BY THE ENGINEER PRIOR TO PROCEEDING.
9. THE GENERAL CONTRACTOR SHALL BE RESPONSIBLE FOR THE SAFETY OF WORK AREA, ADJACENT AREAS AND BUILDING OCCUPANTS THAT ARE LIKELY TO BE AFFECTED BY THE WORK UNDER THIS CONTRACT. WORK SHALL CONFORM TO ALL OSHA REQUIREMENTS AND THE LOCAL JURISDICTION.
10. THE GENERAL CONTRACTOR SHALL COORDINATE WORK AND SCHEDULE WORK ACTIVITIES WITH OTHER DISCIPLINES.
11. WORK PREVIOUSLY COMPLETED IS REPRESENTED BY LIGHT SHADED LINES AND NOTES. THE SCOPE OF WORK FOR THIS PROJECT IS REPRESENTED BY DARK SHADED LINES AND NOTES. CONTRACTOR SHALL NOTIFY THE GENERAL CONTRACTOR OF ANY EXISTING CONDITIONS THAT DEVIATE FROM THE DRAWINGS PRIOR TO BEGINNING CONSTRUCTION.
12. THE CONTRACTOR SHALL PROVIDE WRITTEN NOTICE TO THE CONSTRUCTION MANAGER 48 HOURS PRIOR TO COMMENCEMENT OF WORK.
13. THE CONTRACTOR SHALL PROTECT EXISTING IMPROVEMENTS, PAVEMENTS, CURBS, LANDSCAPING AND STRUCTURES.
14. THE CONTRACTOR SHALL CONTACT UTILITY LOCATING SERVICES PRIOR TO THE START OF CONSTRUCTION.
15. THE GENERAL CONTRACTOR SHALL COORDINATE AND MAINTAIN ACCESS FOR ALL TRADES AND CONTRACTORS TO THE SITE AND/OR BUILDING.
16. THE GENERAL CONTRACTOR SHALL BE RESPONSIBLE FOR SECURITY OF THE SITE FOR THE DURATION OF CONSTRUCTION UNTIL JOB COMPLETION.
17. THE GENERAL CONTRACTOR SHALL MAINTAIN IN GOOD CONDITION ONE COMPLETE SET OF PLANS WITH ALL REVISIONS, ADDENDA, AND CHANGE ORDERS ON THE PREMISES AT ALL TIMES.
18. THE CONTRACTOR SHALL PROVIDE PORTABLE FIRE EXTINGUISHERS WITH A RATING OF NOT LESS THAN 2-A:10-B:C AND SHALL BE WITHIN 25 FEET OF TRAVEL DISTANCE TO ALL PORTIONS OF WHERE THE WORK IS BEING COMPLETED DURING CONSTRUCTION.
19. ALL EXISTING ACTIVE SEWER, WATER, GAS, ELECTRIC, AND OTHER UTILITIES SHALL BE PROTECTED AT ALL TIMES, AND WHERE REQUIRED FOR THE PROPER EXECUTION OF THE WORK, SHALL BE RELOCATED AS DIRECTED BY THE ENGINEER. EXTREME CAUTION SHOULD BE USED BY THE CONTRACTOR WHEN EXCAVATING OR DRILLING PIERS AROUND OR NEAR UTILITIES. THE CONTRACTOR SHALL PROVIDE SAFETY TRAINING FOR THE WORKING CREW. THIS SHALL INCLUDE BUT NOT BE LIMITED TO A) FALL PROTECTION, B) CONFINED SPACE, C) ELECTRICAL SAFETY, AND D) TRENCHING & EXCAVATION.
20. ALL EXISTING INACTIVE SEWER, WATER, GAS, ELECTRIC, AND OTHER UTILITIES, WHICH INTERFERE WITH THE EXECUTION OF THE WORK, SHALL BE REMOVED, CAPPED, PLUGGED OR OTHERWISE DISCONNECTED AT POINTS WHICH WILL NOT INTERFERE WITH THE EXECUTION OF THE WORK, AS DIRECTED BY THE ENGINEER, AND SUBJECT TO THE APPROVAL OF THE OWNER AND/OR LOCAL UTILITIES.
21. THE AREAS OF THE OWNER'S PROPERTY DISTURBED BY THE WORK AND NOT COVERED BY THE EQUIPMENT OR DRIVEWAY, SHALL BE GRADED TO A UNIFORM SLOPE, AND STABILIZED TO PREVENT EROSION.
22. CONTRACTOR SHALL MINIMIZE DISTURBANCE TO THE EXISTING SITE DURING CONSTRUCTION. EROSION CONTROL MEASURES, IF REQUIRED DURING CONSTRUCTION, SHALL BE IN CONFORMANCE WITH THE FEDERAL AND LOCAL JURISDICTION FOR EROSION AND SEDIMENT CONTROL.
23. NO FILL OR EMBANKMENT MATERIAL SHALL BE PLACED ON FROZEN GROUND. FROZEN MATERIALS, SNOW OR ICE SHALL NOT BE PLACED IN ANY FILL OR EMBANKMENT.
24. THE SUBGRADE SHALL BE BROUGHT TO A SMOOTH UNIFORM GRADE AND COMPACTED TO 95 PERCENT STANDARD PROCTOR DENSITY UNDER PAVEMENT AND STRUCTURES AND 80 PERCENT STANDARD PROCTOR DENSITY IN OPEN SPACE. ALL TRENCHES IN PUBLIC RIGHT OF WAY SHALL BE BACKFILLED WITH FLOWABLE FILL OR OTHER MATERIAL PRE-APPROVED BY THE LOCAL JURISDICTION.
25. ALL NECESSARY RUBBISH, STUMPS, DEBRIS, STICKS, STONES, AND OTHER REFUSE SHALL BE REMOVED FROM THE SITE AND DISPOSED OF IN A LAWFUL MANNER.
26. ALL BROCHURES, OPERATING AND MAINTENANCE MANUALS, CATALOGS, SHOP DRAWINGS, AND OTHER DOCUMENTS SHALL BE TURNED OVER TO THE GENERAL CONTRACTOR AT COMPLETION OF CONSTRUCTION AND PRIOR TO PAYMENT.
27. THE CONTRACTOR SHALL SUBMIT A COMPLETE SET OF AS-BUILT REDLINES TO THE GENERAL CONTRACTOR UPON COMPLETION OF PROJECT AND PRIOR TO FINAL PAYMENT. SERIAL NUMBER SHALL BE INCLUDED FOR SPONSOR SITES.
28. THE CONTRACTOR SHALL LEAVE PREMISES IN A CLEAN CONDITION.
29. THE PROPOSED FACILITY WILL BE UNMANNED AND DOES NOT REQUIRE POTABLE WATER OR SEWER SERVICE, AND IS NOT FOR HUMAN HABITATION (NO HANDICAP ACCESS REQUIRED).
30. CONTRACTORS SHALL BE RESPONSIBLE FOR OBTAINING ALL PERMITS AND INSPECTIONS REQUIRED FOR CONSTRUCTION. IF CONTRACTOR CANNOT OBTAIN A PERMIT, THEY MUST NOTIFY THE GENERAL CONTRACTOR IMMEDIATELY.
31. THE CONTRACTOR SHALL REMOVE ALL TRASH AND DEBRIS FROM THE SITE ON A DAILY BASIS.
32. INFORMATION SHOWN ON THESE DRAWINGS WAS OBTAINED FROM SITE VISITS AND/OR DRAWINGS PROVIDED BY THE SITE OWNER. CONTRACTORS SHALL NOTIFY THE ENGINEER OF ANY DISCREPANCIES PRIOR TO ORDERING MATERIAL OR PROCEEDING WITH CONSTRUCTION.

ELECTRICAL NOTES

1. THE ELECTRICAL CONTRACTOR SHALL SUPPLY AND INSTALL ANY/ALL ELECTRICAL WORK INDICATED. ANY/ALL CONSTRUCTION SHALL BE IN ACCORDANCE WITH DRAWINGS AND ANY/ALL APPLICABLE SPECIFICATIONS. IF ANY PROBLEMS ARE ENCOUNTERED BY COMPLYING WITH THESE REQUIREMENTS, CONTRACTOR SHALL NOTIFY 'CONSTRUCTION MANAGER' AS SOON AS POSSIBLE, AFTER THE DISCOVERY OF THE PROBLEMS, AND SHALL NOT PROCEED WITH THAT PORTION OF WORK, UNTIL THE 'CONSTRUCTION MANAGER' HAS DIRECTED THE CORRECTIVE ACTIONS TO BE TAKEN.
2. THE ELECTRICAL CONTRACTOR SHALL VISIT THE JOB SITE AND FAMILIARIZE THEMSELVES WITH ANY/ALL CONDITIONS AFFECTING ELECTRICAL AND COMMUNICATION INSTALLATION AND MAKE PROVISIONS AS TO THE COST THEREOF. THE CONDITION OF EXISTING ELECTRICAL EQUIP., LIGHT FIXTURES, ETC., THAT ARE PART OF THE FINAL SYSTEM, SHALL BE VERIFIED BY THE CONTRACTOR, PRIOR TO THE SUBMITTAL OF HIS BID. FAILURE TO COMPLY WITH THIS PARAGRAPH WILL IN NO WAY RELIEVE CONTRACTOR OF PERFORMING ALL WORK NECESSARY FOR A COMPLETE AND WORKING SYSTEM.
3. ALL WORK SHALL BE PERFORMED IN ACCORDANCE WITH THE ADOPTED EDITION OF THE NEC/CEC AND ALL CODES AND LOCAL ORDINANCES OF THE LOCAL POWER COMPANIES HAVING JURISDICTION AND SHALL INCLUDE BUT NOT BE LIMITED TO:

A. UL - UNDERWRITERS LABORATORIES
B. NEC - NATIONAL ELECTRICAL CODE
C. CEC - CALIFORNIA ELECTRICAL CODE
D. NEMA - NATIONAL ELECTRICAL MANUFACTURERS ASSOC.
E. OSHA - OCCUPATIONAL SAFETY AND HEALTH ACT
F. SBC - STANDARD BUILDING CODE
G. NFPA - NATIONAL FIRE PROTECTION ASSOCIATION

4. DO NOT SCALE ELECTRICAL DRAWINGS, REFER TO SITE PLANS AND ELEVATIONS FOR EXACT LOCATIONS OF ALL EQUIPMENT, BUT CONFIRM WITH 'CONSTRUCTION MANAGER' ANY SIZES AND LOCATIONS WHEN NEEDED.
5. EXISTING SERVICES: THE CONTRACTOR SHALL NOT INTERRUPT EXISTING SERVICES WITHOUT WRITTEN PERMISSION OF THE OWNER.
6. THE CONTRACTOR SHALL PAY FOR ANY/ALL PERMITS, FEES, INSPECTIONS AND TESTING. THE CONTRACTOR IS TO OBTAIN PERMITS AND APPROVED SUBMITTALS PRIOR TO THE WORK BEGINNING OR ORDERING THE EQUIPMENT.
7. THE TERM "PROVIDE" USED IN CONSTRUCTION DOCUMENTS AND SPECIFICATIONS, INDICATES THAT THE CONTRACTOR SHALL FURNISH AND INSTALL.
8. THE CONTRACTOR SHALL CONFIRM WITH LOCAL UTILITY COMPANY ANY/ALL REQUIREMENTS SUCH AS THE: LUG SIZE RESTRICTIONS, CONDUIT ENTRY, SIZE OF TRANSFORMERS, SCHEDULED DOWNTIME FOR THE OWNERS' CONFIRMATION, ETC. ANY/ALL CONFLICTS SHALL BE BROUGHT TO THE ATTENTION OF THE CONSTRUCTION MANAGER, PRIOR TO BEGINNING ANY WORK.
9. CONDUCTORS: CONTRACTOR SHALL USE 98% CONDUCTIVITY COPPER OR ALUMINUM WITH TYPE (THWN-2) INSULATION, 600 VOLT, COLOR CODED UNLESS SPECIFIED DIFFERENTLY ON DRAWINGS WHERE COLOR CODED WIRE INSULATION IS UNAVAILABLE, PROVIDE PHASE TAPE TO IDENTIFY CONDUCTORS.
10. ALL (THWN-2) WIRING INSTALLATIONS TO FOLLOW MANUFACTURER'S INSTRUCTIONS AND RECOMMENDATIONS.
11. OUTLET BOXES SHALL BE PRESSED STEEL IN DRY LOCATIONS, CAST ALLOY WITH THREADED HUBS IN WET/DAMP LOCATIONS AND SPECIAL ENCLOSURES FOR OTHER CLASSIFIED AREAS.
12. IT IS NOT THE INTENT OF THESE PLANS TO SHOW EVERY MINOR DETAIL OF THE CONSTRUCTION. CONTRACTOR IS EXPECTED TO FURNISH AND INSTALL ALL ITEMS FOR A COMPLETE ELECTRICAL SYSTEM AND PROVIDE ALL REQUIREMENTS FOR THE EQUIPMENT TO BE PLACED IN PROPER WORKING ORDER. CONTRACTOR IS TO PROVIDE ALL ELECTRICAL EQUIPMENT UNLESS OTHERWISE DIRECTED.
13. ALL WORK SHALL BE PERFORMED BY A LICENSED ELECTRICAL CONTRACTOR IN A FIRST CLASS, WORKMANLIKE MANNER. THE COMPLETED SYSTEM SHALL BE FULLY OPERATIONAL AND SUBJECT TO REGULATORY INSPECTION AND APPROVAL BY CONSTRUCTION MANAGER.
14. ALL WORK SHALL BE COORDINATED WITH OTHER TRADES TO AVOID INTERFERENCE WITH THE PROGRESS OF CONSTRUCTION.

PACIFIC GAS AND ELECTRIC COMPANY
P.O. BOX 997300
SACRAMENTO, CA 95899-7300

CUPERTINO ELECTRIC
1132 NORTH 7TH STREET
SAN JOSE, CA 95112
(408)808-8000
C-10 LIC.NO. 174637

CONSULTANT
Blair, Church & Flynn
CONSULTING ENGINEERS
Blair, Church & Flynn Consulting Engineers
450 Clovis Avenue, Suite 200
Clovis, California 93612
Tel (559) 326-1400
Fax (559) 326-1500

PROJECT NO:	19-1-22141-00
DRAWN BY:	ERIK OROZCO
CHECKED BY:	ROBERT FRANCIS

REV	DATE	DESCRIPTION
0	04/27/2020	ISSUED FOR 100% REVIEW

REGISTERED PROFESSIONAL ENGINEER DAVID A. MONRY No. 54,414 CIVIL STATE OF CALIFORNIA Date Signed:

REGISTERED PROFESSIONAL ENGINEER BRIAN M. DUFFY No. E22220 ELECTRICAL STATE OF CALIFORNIA Date Signed:

NOT TO BE USED FOR CONSTRUCTION

IT IS A VIOLATION OF LAW FOR ANY PERSON, UNLESS THEY ARE ACTING UNDER THE DIRECTION OF A LICENSED PROFESSIONAL ENGINEER, TO ALTER THIS DOCUMENT.

PG&E ACCEPTANCE STAMP

PG&E PROJECT # 31471119
COUNTY OF SAN MATEO
555 COUNTY CENTER,
REDWOOD CITY, CA 94063

SHEET TITLE
GENERAL NOTES

SHEET NUMBER
T2.0

ELECTRICAL NOTES CONT.

15. CONTRACTOR SHALL GUARANTEE ANY/ALL MATERIALS AND WORK FREE FROM DEFECTS FOR A PERIOD OF NOT LESS THAN ONE YEAR FROM DATE OF ACCEPTANCE.

16. THE CORRECTION OF ANY DEFECTS SHALL BE COMPLETED WITHOUT ANY ADDITIONAL CHARGE AND SHALL INCLUDE THE REPLACEMENT OR THE REPAIR OF ANY OTHER PHASE OF THE INSTALLATION, WHICH MAY HAVE BEEN DAMAGED THEREIN.

17. ADEQUATE AND REQUIRED LIABILITY INSURANCE SHALL BE PROVIDED FOR PROTECTION AGAINST PUBLIC LOSS AND ANY/ALL PROPERTY DAMAGE FOR THE DURATION OF WORK.

18. PROVIDE AND INSTALL CONDUIT, CONDUCTORS, PULL WIRES, BOXES, COVER PLATES AND DEVICES FOR ALL OUTLETS AS INDICATED.

19. TRENCHING AND BACKFILL: THE CONTRACTOR SHALL PROVIDE FOR ALL UNDERGROUND INSTALLED CONDUIT AND/OR CABLES INCLUDING EXCAVATION AND BACKFILLING AND COMPACTION. REFER TO GENERAL SITE WORK NOTES.

20. MATERIALS, PRODUCTS AND EQUIPMENT, INCLUDING ALL COMPONENTS THEREOF, SHALL BE NEW AND SHALL APPEAR ON THE LIST OF U.L. APPROVED ITEMS AND SHALL MEET OR EXCEED THE REQUIREMENTS OF THE NEC/CEC, NEMA AND IEEE.

21. CONTRACTOR SHALL SUBMIT SHOP DRAWINGS OR MANUFACTURES CATALOG INFORMATION OF ANY/ALL LIGHTING FIXTURES, SWITCHES AND ALL OTHER ELECTRICAL ITEMS FOR APPROVAL BY THE CONSTRUCTION MANAGER PRIOR TO INSTALLATION.

22. ANY CUTTING OR PATCHING DEEMED NECESSARY FOR ELECTRICAL WORK IS THE ELECTRICAL CONTRACTORS RESPONSIBILITY AND SHALL BE INCLUDED IN THE COST FOR WORK AND PERFORMED TO THE SATISFACTION OF THE 'CONSTRUCTION MANAGER' UPON FINAL ACCEPTANCE.

23. THE ELECTRICAL CONTRACTOR SHALL LABEL ALL PANELS WITH ONLY TYPEWRITTEN DIRECTORIES.

24. DISCONNECT SWITCHES SHALL BE H.P. RATED HEAVY-DUTY, QUICK-MAKE AND QUICK-BREAK ENCLOSURES, AS REQUIRED BY EXPOSURE TYPE.

25. ALL CONNECTIONS EXCEPT THE EV CHARGE CABLE TERMINATION IN THE CHARGE POST SHALL BE MADE WITH A PROTECTIVE COATING OF AN ANTI-OXIDE COMPOUND SUCH AS "NOALOX" BY IDEAL INDUSTRIAL INC., COAT ALL WIRE SURFACES BEFORE CONNECTING. EXPOSED ALUMINUM & COPPER SURFACES, INCLUDING GROUND BARS, SHALL BE TREATED - NO SUBSTITUTIONS.

26. ALL EXTERIOR AND INTERIOR ABOVE GROUND CONDUIT SHALL BE RIGID UNLESS SPECIFIED OTHERWISE. ALL BURIED CONDUITS SHALL BE SCH 40 PVC UNLESS SPECIFIED OTHERWISE.

27. RACEWAYS: CONDUIT SHALL BE SCHEDULE 40 PVC, MEETING OR EXCEEDING NEMA TC2 - 1990. THE CONTRACTOR SHALL PLUG AND CAP EACH END OF SPARE AND EMPTY CONDUITS AND PROVIDE TWO SEPARATE PULL STRINGS - 200 LBS TEST POLYETHYLENE CORD. ALL CONDUIT BENDS SHALL BE A MINIMUM OF 3 FT. RADIUS. RGS CONDUITS WHEN SPECIFIED, SHALL MEET UL-6 FOR GALVANIZED STEEL. ALL FITTINGS SHALL BE SUITABLE FOR USE WITH THREADED RIGID CONDUIT. COAT ALL THREADS WITH 'BRITE ZINC' OR 'GOLD GALV'.

28. SUPPORT OF ALL ELECTRICAL WORK SHALL BE AS REQUIRED BY NEC/CEC.

29. CONNECTORS FOR POWER CONDUCTORS: CONTRACTOR SHALL USE PRESSURE TYPE INSULATED TWIST-ON CONNECTORS FOR NO. 10 AWG AND SMALLER. USE SOLDERLESS MECHANICAL TERMINAL LUGS FOR NO. 8 AWG AND LARGER.

30. THE CONTRACTOR SHALL PLACE TWO LENGTHS OF WARNING TAPE AT A DEPTH OF 12" BELOW GROUND AND DIRECTLY ABOVE ELECTRICAL SERVICE CONDUITS. CAUTION TAPE TO READ "CAUTION BURIED ELECTRIC".

31. WHEN DIRECTIONAL BORING IS REQUIRED, CONTRACTOR SHALL INSTALL A LOOSE TONING WIRE WITHIN INSTALLED CONDUIT TO ALLOW FOR IDENTIFICATION OF UNDERGROUND CONDUITS.

32. ALL MATERIALS AND EQUIPMENT SUPPLIED AND INSTALLED BY THE CONTRACTOR SHOULD BE NEW AND UNUSED.

REINFORCED CONCRETE NOTES

1. CONCRETE SHALL ATTAIN A MINIMUM COMPRESSIVE STRENGTH OF 2500 PSI IN 28 DAYS UNLESS OTHERWISE NOTED; CONTINUOUS INSPECTION IS NOT REQUIRED.
   SLUMP: 4" MIN./6" MAX.
   AIR ENTRAINMENT: 4 1/2% - 7% BY VOLUME

2. REINFORCEMENT SHALL BE A NEW BILLET STEEL DEFORMED BARS CONFORMING TO ASTM SPECIFICATION A615 GRADE 60. MAXIMUM COARSE AGGREGATE SIZE SHALL BE 3/4".

3. REINFORCEMENT SHALL COMPLY WITH THE LATEST EDITION OF ACI-318 FOR MINIMUM CLEARANCES.

REINFORCED CONCRETE NOTES CONT.

4. ALL EMBEDDED ITEMS SHALL BE SECURELY HELD IN POSITION PRIOR TO PLACEMENT OF CONCRETE. ALL CONCRETE SHALL BE READY-MIXED IN ACCORDANCE WITH ASTM C94.

5. MAINTAIN TEMPERATURE OF CAST IN PLACE CONCRETE BETWEEN 50 DEGREES AND 90 DEGREES FAHRENHEIT.

6. DO NOT USE RETEMPERED CONCRETE, OR ADD WATER TO READY-MIX CONCRETE AT THE JOB SITE.

7. WELDED WIRE FABRIC SHALL CONFORM TO ASTM A185.

8. EXCEPT AS DETAILED OR AUTHORIZED. MAKE BARS CONTINUOUS AROUND CORNERS. WHERE PERMITTED, SPLICES MADE BY CONTACT LAPS SHALL BE CLASS "B" TENSION LAPS UNLESS NOTED OTHERWISE.

9. DETAIL BARS IN ACCORDANCE WITH "ACI DETAILING MANUAL - 2004, PUBLICATION SP-66" AND "BUILDING CODE REQUIREMENTS FOR REINFORCED CONCRETE", ACI 318-08.

GENERAL SITE WORK NOTES

PART 1 - GENERAL

CLEARING, GRUBBING, STRIPPING, EROSION CONTROL, SURVEY, LAYOUT, SUBGRADE PREPARATION AND FINISH GRADING AS REQUIRED TO COMPLETE THE PROPOSED WORK SHOWN IN THESE PLANS.

1.1 REFERENCES:

A. DOT (STATE DEPARTMENT OF TRANSPORTATION STANDARD SPECIFICATIONS FOR HIGHWAY CONSTRUCTION-CURRENT EDITION).
B. ASTM (AMERICAN SOCIETY FOR TESTING AND MATERIALS).
C. OSHA (OCCUPATION SAFETY AND HEALTH ADMINISTRATION).

1.2 INSPECTION AND TESTING:

A. GENERAL CONTRACTOR SHALL PERFORM ALL WORK IN CONFORMANCE WITH THE PLANS AND SPECIFICATIONS. PERFORM INSPECTIONS BEFORE CONCEALING WORK WITH FOLLOW-ON ACTIVITIES (BACKFILL, CONCRETE POUR, ETC).

1.3 SITE MAINTENANCE AND PROTECTION:

A. KEEP SITE FREE OF ALL PONDING WATER.

B. PROVIDE EROSION CONTROL MEASURES IN ACCORDANCE WITH STATE DOT, LOCAL PERMITTING AGENCY AND EPA REQUIREMENTS.

C. PROVIDE AND MAINTAIN ALL TEMPORARY FENCING, BARRICADES, WARNING SIGNALS AND SIMILAR DEVICES NECESSARY TO PROTECT AGAINST THEFT FROM PROPERTY DURING THE ENTIRE PERIOD OF CONSTRUCTION. REMOVE ALL SUCH DEVICES UPON COMPLETION OF THE WORK.

D. EXISTING UTILITIES: DO NOT INTERRUPT EXISTING UTILITIES SERVING FACILITIES OCCUPIED BY THE OWNER OR OTHERS, EXCEPT WHEN PERMITTED IN WRITING BY THE CONSTRUCTION MANAGER AND THEN ONLY AFTER ACCEPTABLE TEMPORARY UTILITY SERVICES HAVE BEEN PROVIDED.

E. PROVIDE A MINIMUM 48-HOUR NOTICE TO THE CONSTRUCTION MANAGER AND RECEIVE WRITTEN NOTICE TO PROCEED BEFORE INTERRUPTING ANY UTILITY SERVICE.

PART 2 - PRODUCTS

2.1 GRANULAR BACKFILL: SHALL MEET THE FOLLOWING GRADATION:

SIEVE SIZE	TOTAL PERCENT PASSING
1 1/2 INCH (37.5 MM)	100
1 INCH (25.0 MM)	75 TO 100
3/4 INCH (19.0 MM)	80 TO 100
3/8 INCH (9.5 MM)	35 TO 75
NO. 4 (4.75 MM)	30 TO 60
NO. 30 (0.600 MM)	7 TO 30
NO 200 (0.075 MM)	3 TO 15

2.2 GRANULAR BEDDING AND TRENCH BACKFILL: WELL-GRADED SAND MEETING THE GRADATION REQUIREMENTS OF ASTM D2487 (SE OR SW-SM).

2.3 COARSE AGGREGATE FOR ACCESS ROAD SUBBASE COURSE SHALL CONFORM TO ASTM D2940.

GENERAL SITE WORK NOTES CONT.

2.4 UNSUITABLE MATERIAL: HIGH AND MODERATELY PLASTIC SILTS AND CLAYS (LL>45). MATERIAL CONTAINING REFUSE, FROZEN LUMPS, DEMOLISHED BITUMINOUS MATERIAL, VEGETATIVE MATTER, WOOD, STONES IN EXCESS OF 3 INCHES IN ANY DIMENSION, AND DEBRIS AS DETERMINED BY THE CONSTRUCTION MANAGER. TYPICAL THESE WILL BE SOILS CLASSIFIED BY ASTM AS PT, MH, CH, OH, ML, AND OL.

PART 3 - EXECUTION

3.1 GENERAL:

A. BEFORE STARTING GENERAL SITE PREPARATION ACTIVITIES, INSTALL EROSION AND SEDIMENT CONTROL MEASURES. THE WORK AREA SHALL BE CONSTRUCTED AND MAINTAINED IN SUCH CONDITION THAT IN THE EVENT OF RAIN THE SITE WILL BE DRAINED AT ALL TIMES.

B. BEFORE ALL SURVEY, LAYOUT, STAKING, AND MARKING, ESTABLISH AND MAINTAIN ALL LINES, GRADES, ELEVATIONS AND BENCHMARKS NEEDED FOR EXECUTION OF THE WORK.

C. CLEAR AND GRUB THE AREA WITHIN THE LIMITS OF THE SITE. REMOVE TREES, BRUSH, STUMPS, RUBBISH AND OTHER DEBRIS AND VEGETATION RESTING ON OR PROTRUDING THROUGH THE SURFACE OF THE SITE AREA TO BE CLEARED.

D. REMOVE TOPSOIL MATERIAL COMPLETELY FROM THE SURFACE UNTIL THE SOIL NO LONGER MEETS THE DEFINITION OF TOPSOIL. AVOID MIXING TOPSOIL WITH SUBSOIL OR OTHER UNDESIRABLE MATERIALS.

E. EXCEPT WHERE EXCAVATION TO GREATER DEPTH IS INDICATED, FILL DEPRESSIONS RESULTING FROM CLEARING, GRUBBING AND DEMOLITION WORK COMPLETELY WITH SUITABLE FILL.

F. REMOVE FROM THE SITE AND DISPOSE IN AN AUTHORIZED LANDFILL ALL DEBRIS RESULTING FROM CLEARING AND GRUBBING OPERATIONS. BURNING WILL NOT BE PERMITTED.

G. PRIOR TO EXCAVATING, THOROUGHLY EXAMINE THE AREA TO BE EXCAVATED AND/OR TRENCHED TO VERIFY THE LOCATIONS OF FEATURES INDICATED ON THE DRAWINGS AND TO ASCERTAIN THE EXISTENCE AND LOCATION OF ANY STRUCTURE, UNDERGROUND STRUCTURE, OR OTHER ITEM NOT SHOWN THAT MIGHT INTERFERE WITH THE PROPOSED CONSTRUCTION. NOTIFY THE CONSTRUCTION MANAGER OF ANY OBSTRUCTIONS THAT WILL PREVENT ACCOMPLISHMENT OF THE WORK AS INDICATED ON THE DRAWINGS.

H. SEPARATE AND STOCK PILE ALL EXCAVATED MATERIALS SUITABLE FOR BACKFILL. ALL EXCESS EXCAVATED AND UNSUITABLE MATERIALS SHALL BE DISPOSED OF OFF-SITE IN A LEGAL MANNER.

3.2 BACKFILL:

A. AS SOON AS PRACTICAL, AFTER COMPLETING CONSTRUCTION OF THE RELATED STRUCTURE, INCLUDING EXPIRATION OF THE SPECIFIED MINIMUM CURING PERIOD FOR CAST-IN-PLACE CONCRETE, BACKFILL THE EXCAVATION WITH APPROVED MATERIAL TO RESTORE THE REQUIRED FINISHED GRADE.

B. PRIOR TO PLACING BACKFILL AROUND STRUCTURES, ALL FORMS SHALL BE REMOVED AND THE EXCAVATION CLEANED OF ALL TRASH, DEBRIS, AND UNSUITABLE MATERIALS.

C. DO NOT PLACE FROZEN MATERIAL IN AS BACKFILL.

D. BACKFILL BY PLACING AND COMPACTING SUITABLE BACKFILL MATERIAL OR SELECT GRANULAR BACKFILL MATERIAL WHEN REQUIRED IN UNIFORM HORIZONTAL LAYERS OF NO GREATER THAN 8-INCHES LOOSE THICKNESS AND COMPACTED. WHERE HAND OPERATED COMPACTORS ARE USED, THE FILL MATERIAL SHALL BE PLACED IN LIFTS NOT TO EXCEED 4 INCHES IN LOOSE DEPTH AND COMPACTED.

E. WHENEVER TESTING INDICATES THAT THE CONTRACTOR HAS NOT OBTAINED THE SPECIFIED DENSITY, THE SUCCEEDING LAYER SHALL NOT BE PACED UNTIL THE REQUIREMENTS ARE MET, UNLESS OTHERWISE AUTHORIZED BY THE CONSTRUCTION MANAGER. THE CONTRACTOR SHALL TAKE WHATEVER APPROPRIATE ACTIONS NECESSARY SUCH AS DRYING, ADDING WATER, INCREASING THE COMPACTIVE EFFORT TO MEET COMPACTION REQUIREMENTS

3.3 TRENCH EXCAVATION:

A. UTILITY TRENCHES SHALL BE EXCAVATED TO THE LINES AND GRADES SHOWN ON THE DRAWINGS OR AS DIRECTED BY THE GENERAL CONTRACTOR. PROVIDE SHORING, SHEETING AND BRACING AS REQUIRED TO PREVENT CAVING OR SLOUGHING OF THE TRENCH WALLS.

B. EXTEND THE TRENCH WIDTH A MINIMUM OF 6 INCHES BEYOND THE OUTSIDE EDGE OF THE OUTERMOST CONDUIT.

C. WHEN SOFT YIELDING, OR OTHERWISE UNSTABLE SOIL CONDITIONS ARE ENCOUNTERED, EXCAVATE THE REQUIRED TRENCH TO A DEPTH OF NO LESS THAN 12 INCHES BELOW THE REQUIRED ELEVATION, THEN BACKFILL WITH 12" OF GRANULAR BEDDING MATERIAL.

GENERAL SITE WORK NOTES CONT.

3.4 TRENCH BACKFILL:

A. PROVIDE GRANULAR BEDDING MATERIAL IN ACCORDANCE WITH THE DRAWINGS AND THE UTILITY REQUIREMENTS.

B. NOTIFY THE GENERAL CONTRACTOR 24 HOURS IN ADVANCE OF BACKFILLING.

C. CONDUCT UTILITY CHECK TESTS BEFORE BACKFILLING. BACKFILL AND COMPACT TRENCH BEFORE ACCEPTANCE TESTING.

D. PLACE GRANULAR TRENCH BACKFILL UNIFORMLY ON BOTH SIDES OF THE CONDUITS IN 6-INCH UNCOMPACTED LIFTS UNTIL 12 INCHES OVER THE CONDUITS. SOLIDLY RAM AND TAMP BACKFILL INTO SPACE AROUND CONDUITS.

E. PROTECT CONDUIT FROM LATERAL MOVEMENT, IMPACT DAMAGE, OR UNBALANCED LOADING.

F. ABOVE THE CONDUIT EMBEDMENT ZONE, PLACE AND COMPACT SATISFACTORY BACKFILL MATERIAL IN 8-INCH MAXIMUM LOOSE THICKNESS LIFTS TO RESTORE THE REQUIRED FINISHED SURFACE GRADE.

G. COMPACT FINAL TRENCH BACKFILL TO A DENSITY EQUAL TO OR GREATER THAN THAT OF THE EXISTING UNDISTURBED MATERIAL IMMEDIATELY ADJACENT TO THE TRENCH

3.5 FINISH GRADING:

A. PERFORM ALL GRADING TO PROVIDE POSITIVE DRAINAGE AWAY FROM STRUCTURES AND SMOOTH, EVEN SURFACE DRAINAGE OF THE ENTIRE AREA WITHIN THE LIMITS OF CONSTRUCTION. GRADING SHALL BE COMPATIBLE WITH ALL SURROUNDING TOPOGRAPHY AND STRUCTURES.

B. UTILIZE SATISFACTORY FILL MATERIAL RESULTING FROM THE EXCAVATION WORK IN THE CONSTRUCTION OF FILLS, EMBANKMENTS AND FOR REPLACEMENT OF REMOVED UNSUITABLE MATERIALS.

C. REPAIR ALL ACCESS ROADS AND SURROUNDING AREAS USED DURING THE COURSE OF THIS WORK TO THEIR ORIGINAL CONDITION.

3.6 ASPHALT PAVING ROAD:

CALIFORNIA STANDARD SPECIFICATIONS
SECTION 39 - CALIFORNIA DEPARTMENT OF TRANSPORTATION PAVEMENT

A. CONTRACTOR RESPONSIBLE FOR RE-STRIPING AND APPLYING SEALCOATING, UNLESS OTHERWISE SPECIFIED.

PG&E

PACIFIC GAS AND ELECTRIC COMPANY
P.O. BOX 997300
SACRAMENTO, CA 95899-7300

CUPERTINO ELECTRIC
1132 NORTH 7TH STREET
SAN JOSE, CA 95112
(408)808-8000
C-10 LIC.NO. 174637

CONSULTANT
Blair, Church & Flynn
CONSULTING ENGINEERS
Blair, Church & Flynn Consulting Engineers
455 Clovis Avenue, Suite 200
Clovis, California 93612
Tel (559) 326-1400
Fax (559) 326-1500

PROJECT NO:	19-1-22141-00
DRAWN BY:	ERIK OROZCO
CHECKED BY:	ROBERT FRANCIS

REV	DATE	DESCRIPTION
0	04/27/2020	ISSUED FOR 100% REVIEW

REGISTERED PROFESSIONAL ENGINEER DAVID A. MONROE No. 54,414 CIVIL STATE OF CALIFORNIA
Date Signed:
REGISTERED PROFESSIONAL ENGINEER BRIAN M. DUFFY No. E22220 ELECTRICAL STATE OF CALIFORNIA
Date Signed:
NOT TO BE USED FOR CONSTRUCTION

IT IS A VIOLATION OF LAW FOR ANY PERSON, UNLESS THEY ARE ACTING UNDER THE DIRECTION OF A LICENSED PROFESSIONAL ENGINEER, TO ALTER THIS DOCUMENT.

PG&E ACCEPTANCE STAMP

PG&E PROJECT # 31471119
COUNTY OF SAN MATEO
555 COUNTY CENTER,
REDWOOD CITY, CA 94063

SHEET TITLE
GENERAL NOTES

SHEET NUMBER
T2.1

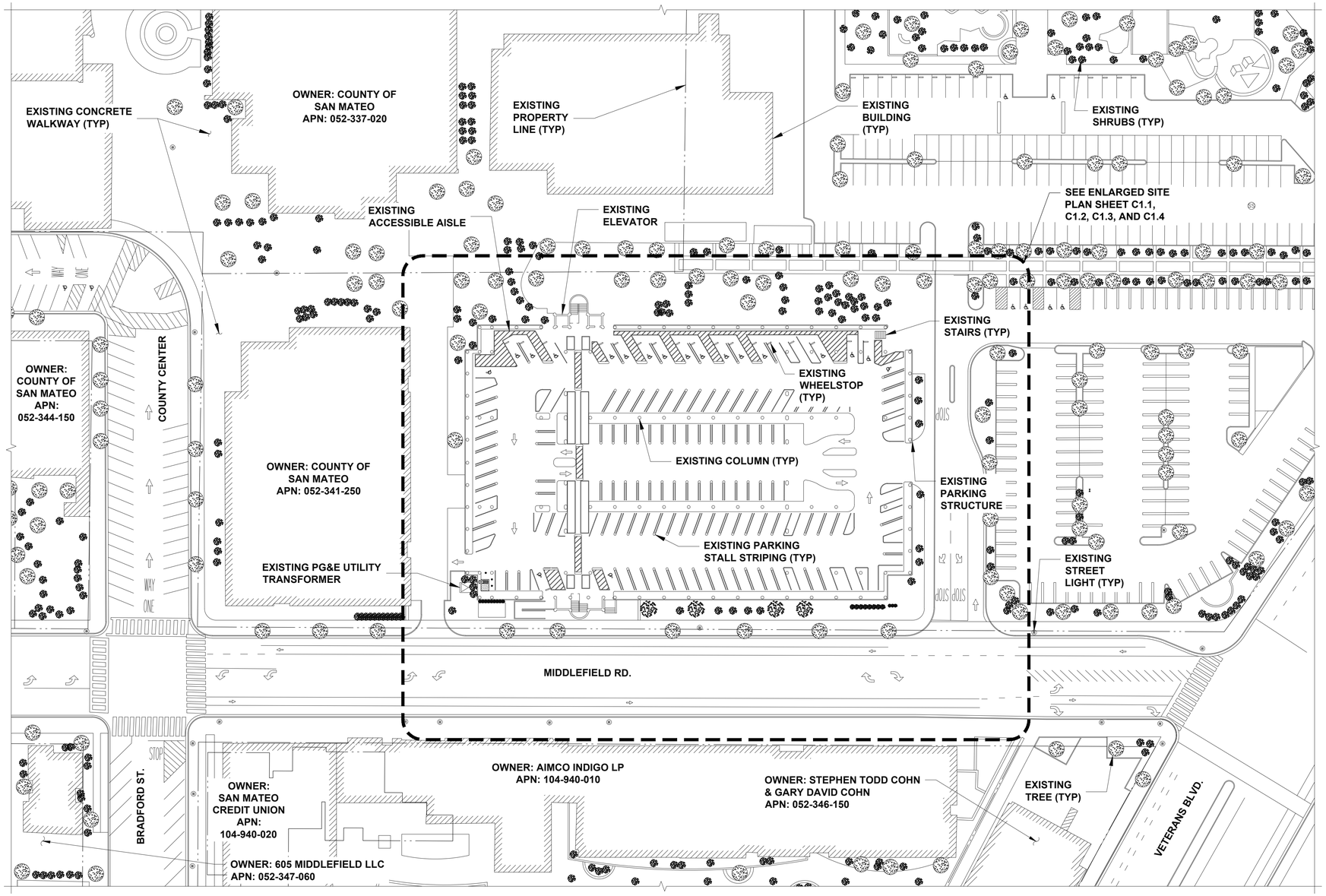

CHARGING TABULATION

TYPE OF STALL	STALLS
PROPOSED EV CHARGING STALLS	
FLEET ELECTRIC VEHICLE	60
TOTAL	60

BILL OF MATERIALS

MATERIAL	UNIT	QUANTITY
WIRE		
#4 CONDUCTOR THWN-2	LF	2,111
#6 CONDUCTOR THWN-2	LF	12,200
3/0 CONDUCTOR THWN-2	LF	2,410
#6 CONDUCTOR GRN INSULATION THWN-2	LF	643
#8 CONDUCTOR GRN INSULATION THWN-2	LF	3,084
#2 CONDUCTOR GRN INSULATION THWN-2	LF	744
CONDUIT		
1 1/4" RMC	LF	3,727
2" RMC	LF	678
EQUIPMENT		
PGEHP600A/480/277V METER	EACH	1
200A 480/277V ENCLOSED BREAKER	EACH	3
112.5 KVA 480-208/120V STEPDOWN TRANSFORMER	EACH	1
150 KVA 480-208/120V STEPDOWN TRANSFORMER	EACH	2
400A 208/120V DISTRIBUTION PANEL	EACH	3
EQUIPMENT FOUNDATION	SF	44
ANCHORED BOLLARD	EACH	12
JUNCTION BOX	EACH	31
NOTE: ALL QUANTITIES ARE ESTIMATED AND SHOULD BE VERIFIED BY THE CONTRACTOR		

OVERALL SITE PLAN

40' 20' 0 40' 80'
1"=40'

PACIFIC GAS AND ELECTRIC COMPANY
P.O. BOX 997300
SACRAMENTO, CA 95899-7300

CUPERTINO ELECTRIC
1132 NORTH 7TH STREET
SAN JOSE, CA 95112
(408)808-8000
C-10 LIC.NO. 174637

CONSULTANT
Blair, Church & Flynn Consulting Engineers
451 Clovis Avenue, Suite 200
Clovis, California 93612
Tel (559) 326-5400
Fax (559) 326-5500

PROJECT NO:	19-1-22141-00
DRAWN BY:	ERIK OROZCO
CHECKED BY:	ROBERT FRANCIS

REV	DATE	DESCRIPTION
0	04/27/2020	ISSUED FOR 100% REVIEW

REGISTERED PROFESSIONAL ENGINEER DAVID A. MONAT No. 54,414 CIVIL STATE OF CALIFORNIA Date Signed:
REGISTERED PROFESSIONAL ENGINEER BRIAN M. DUFFY No. E22220 ELECTRICAL STATE OF CALIFORNIA Date Signed:
NOT TO BE USED FOR CONSTRUCTION

IT IS A VIOLATION OF LAW FOR ANY PERSON, UNLESS THEY ARE ACTING UNDER THE DIRECTION OF A LICENSED PROFESSIONAL ENGINEER, TO ALTER THIS DOCUMENT.

PG&E ACCEPTANCE STAMP

PG&E PROJECT # 31471119
COUNTY OF SAN MATEO
555 COUNTY CENTER,
REDWOOD CITY, CA 94063

SHEET TITLE
OVERALL SITE PLAN

SHEET NUMBER
C1.0

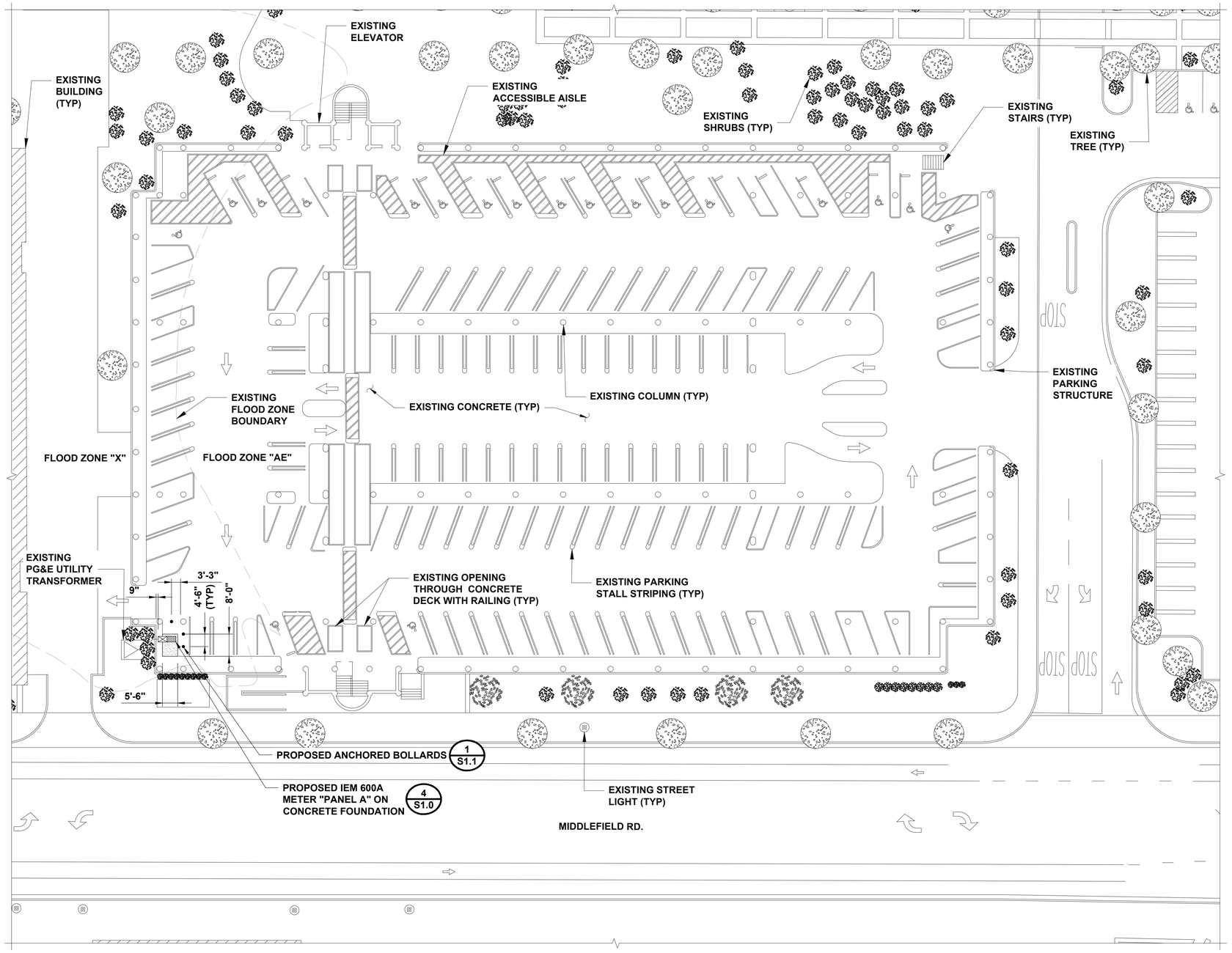

ENLARGED SITE PLAN - GROUND LEVEL

20' 10' 0 20' 40'
1"=20'

PACIFIC GAS AND ELECTRIC COMPANY
P.O. BOX 997300
SACRAMENTO, CA 95899-7300

CUPERTINO ELECTRIC
1132 NORTH 7TH STREET
SAN JOSE, CA 95112
(408)808-8000
C-10 LIC.NO. 174637

CONSULTANT
Blair, Church & Flynn
CONSULTING ENGINEERS
Blair, Church & Flynn
Consulting Engineers
450 Clovis Avenue,
Suite 200
Clovis, California 93612
Tel (559) 326-1400
Fax (559) 326-1500

PROJECT NO:	19-1-22141-00
DRAWN BY:	ERIK OROZCO
CHECKED BY:	ROBERT FRANCIS

REV	DATE	DESCRIPTION
0	04/27/2020	ISSUED FOR 100% REVIEW

REGISTERED PROFESSIONAL ENGINEER
DAVID A. MONK
No. 54,414
CIVIL
STATE OF CALIFORNIA
Date Signed:

NOT TO BE USED FOR CONSTRUCTION

IT IS A VIOLATION OF LAW FOR ANY PERSON, UNLESS THEY ARE ACTING UNDER THE DIRECTION OF A LICENSED PROFESSIONAL ENGINEER, TO ALTER THIS DOCUMENT.

PG&E ACCEPTANCE STAMP

PG&E PROJECT # 31471119
COUNTY OF SAN MATEO
555 COUNTY CENTER,
REDWOOD CITY, CA 94063

SHEET TITLE
ENLARGED SITE PLAN - GROUND LEVEL

SHEET NUMBER
C1.1

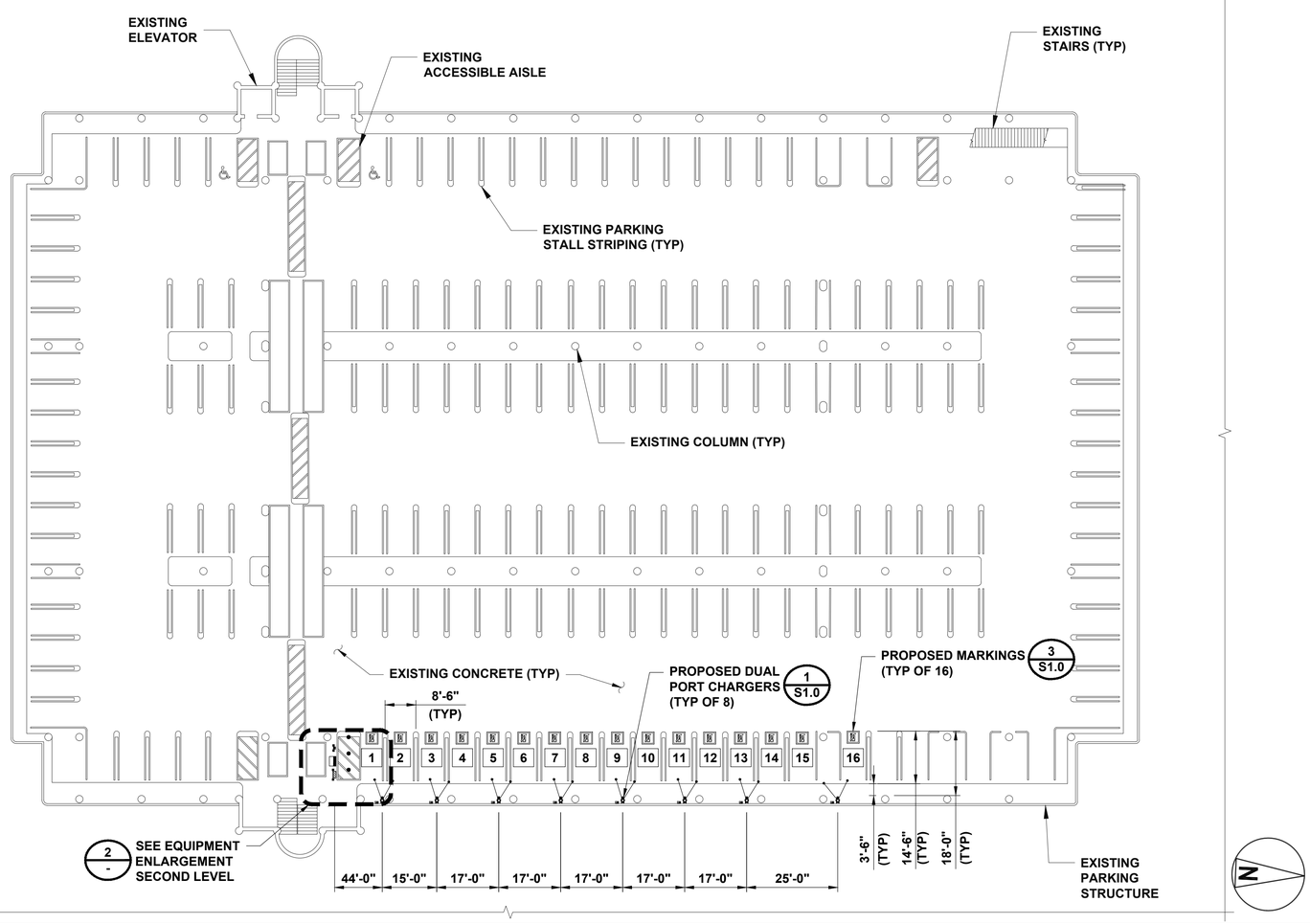

ENLARGED SITE PLAN - SECOND LEVEL

20' 10' 0 20' 40'
1"=20'

1

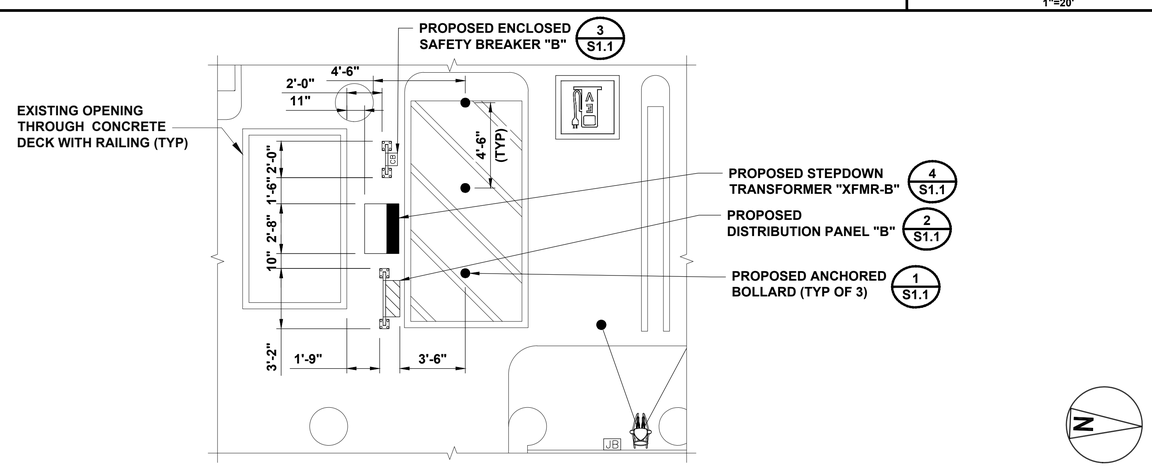

EQUIPMENT ENLARGEMENT SECOND LEVEL

4' 0 4' 8'
1"=4'

2

PROJECT AREA STALL COUNT	
EXISTING STALL COUNT	16
PROPOSED STALL COUNT	16

PROPOSED CHARGEPOINT DISPENSER		
CHARGE PORT NUMBER	SINGLE/DUAL PORT	WALL/PEDESTAL MOUNT
1/2	DUAL	PEDESTAL
3/4	DUAL	PEDESTAL
5/6	DUAL	PEDESTAL
7/8	DUAL	PEDESTAL
9/10	DUAL	PEDESTAL
11/12	DUAL	PEDESTAL
13/14	DUAL	PEDESTAL
15/16	DUAL	PEDESTAL

PG&E

PACIFIC GAS AND ELECTRIC COMPANY
P.O. BOX 997300
SACRAMENTO, CA 95899-7300

CUPERTINO ELECTRIC
1132 NORTH 7TH STREET
SAN JOSE, CA 95112
(408)808-8000
C-10 LIC.NO. 174637

CONSULTANT
Blair, Church & Flynn
CONSULTING ENGINEERS
Blair, Church & Flynn Consulting Engineers
450 Clovis Avenue, Suite 200
Clovis, California 93612
Tel (559) 326-1400
Fax (559) 326-1500

PROJECT NO:	19-1-22141-00
DRAWN BY:	ERIK OROZCO
CHECKED BY:	ROBERT FRANCIS

REV	DATE	DESCRIPTION
0	04/27/2020	ISSUED FOR 100% REVIEW

REGISTERED PROFESSIONAL ENGINEER
DAVID A. MONRY
No. 54,414
CIVIL
STATE OF CALIFORNIA
Date Signed:
NOT TO BE USED FOR CONSTRUCTION

IT IS A VIOLATION OF LAW FOR ANY PERSON, UNLESS THEY ARE ACTING UNDER THE DIRECTION OF A LICENSED PROFESSIONAL ENGINEER, TO ALTER THIS DOCUMENT.

PG&E ACCEPTANCE STAMP

PG&E PROJECT # 31471119
COUNTY OF SAN MATEO
555 COUNTY CENTER,
REDWOOD CITY, CA 94063

SHEET TITLE
ENLARGED SITE PLAN - SECOND LEVEL

SHEET NUMBER
C1.2

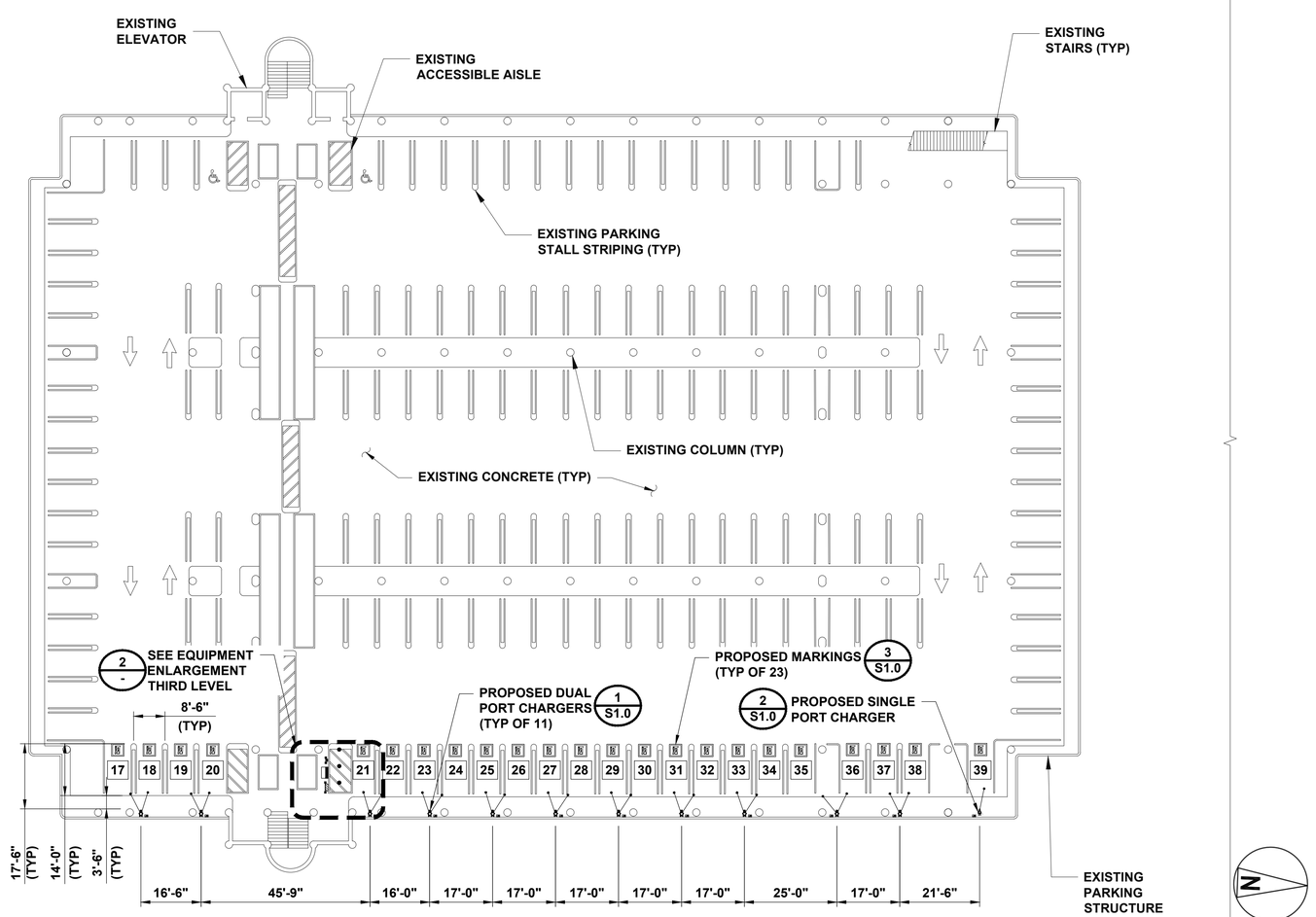

ENLARGED SITE PLAN - THIRD LEVEL

20' 10' 0 20' 40'
1"=20'

1

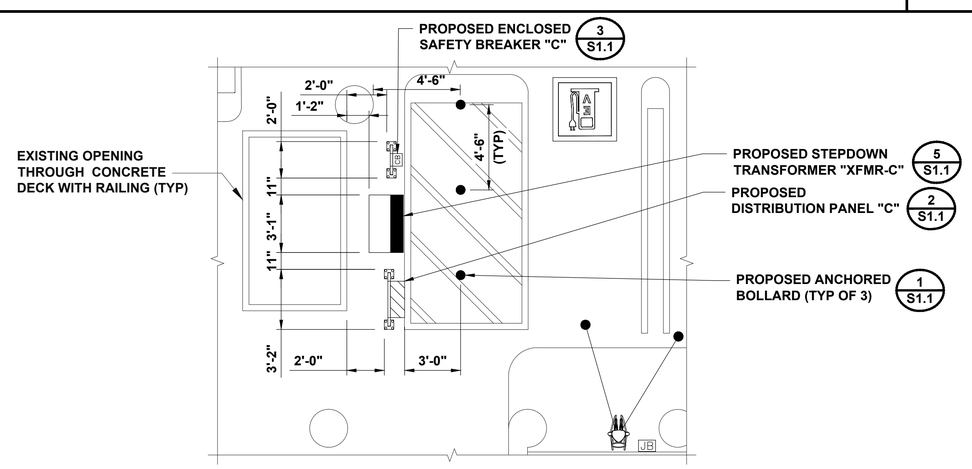

EQUIPMENT ENLARGEMENT THIRD LEVEL

4' 0 4' 8'
1"=4'

2

PROJECT AREA STALL COUNT	
EXISTING STALL COUNT	23
PROPOSED STALL COUNT	23

PROPOSED CHARGEPOINT DISPENSER		
CHARGE PORT NUMBER	SINGLE/DUAL PORT	WALL/PEDESTAL MOUNT
17/18	DUAL	PEDESTAL
19/20	DUAL	PEDESTAL
21/22	DUAL	PEDESTAL
23/24	DUAL	PEDESTAL
25/26	DUAL	PEDESTAL
27/28	DUAL	PEDESTAL
29/30	DUAL	PEDESTAL
31/32	DUAL	PEDESTAL
33/34	DUAL	PEDESTAL
35/36	DUAL	PEDESTAL
37/38	DUAL	PEDESTAL
39	SINGLE	PEDESTAL

PACIFIC GAS AND ELECTRIC COMPANY
P.O. BOX 997300
SACRAMENTO, CA 95899-7300

CUPERTINO ELECTRIC
1132 NORTH 7TH STREET
SAN JOSE, CA 95112
(408)808-8000
C-10 LIC.NO. 174637

CONSULTANT
Blair, Church & Flynn
CONSULTING ENGINEERS
Blair, Church & Flynn Consulting Engineers
450 Clovis Avenue, Suite 200
Clovis, California 93612
Tel (559) 326-1400
Fax (559) 326-1500

PROJECT NO:	19-1-22141-00
DRAWN BY:	ERIK OROZCO
CHECKED BY:	ROBERT FRANCIS

REV	DATE	DESCRIPTION
0	04/27/2020	ISSUED FOR 100% REVIEW

REGISTERED PROFESSIONAL ENGINEER
DAVID A. MOWRY
No. 54,414
CIVIL
STATE OF CALIFORNIA
Date Signed:

NOT TO BE USED FOR CONSTRUCTION

IT IS A VIOLATION OF LAW FOR ANY PERSON, UNLESS THEY ARE ACTING UNDER THE DIRECTION OF A LICENSED PROFESSIONAL ENGINEER, TO ALTER THIS DOCUMENT.

PG&E ACCEPTANCE STAMP

PG&E PROJECT # 31471119
COUNTY OF SAN MATEO
555 COUNTY CENTER,
REDWOOD CITY, CA 94063

SHEET TITLE
ENLARGED SITE PLAN - THIRD LEVEL

SHEET NUMBER
C1.3

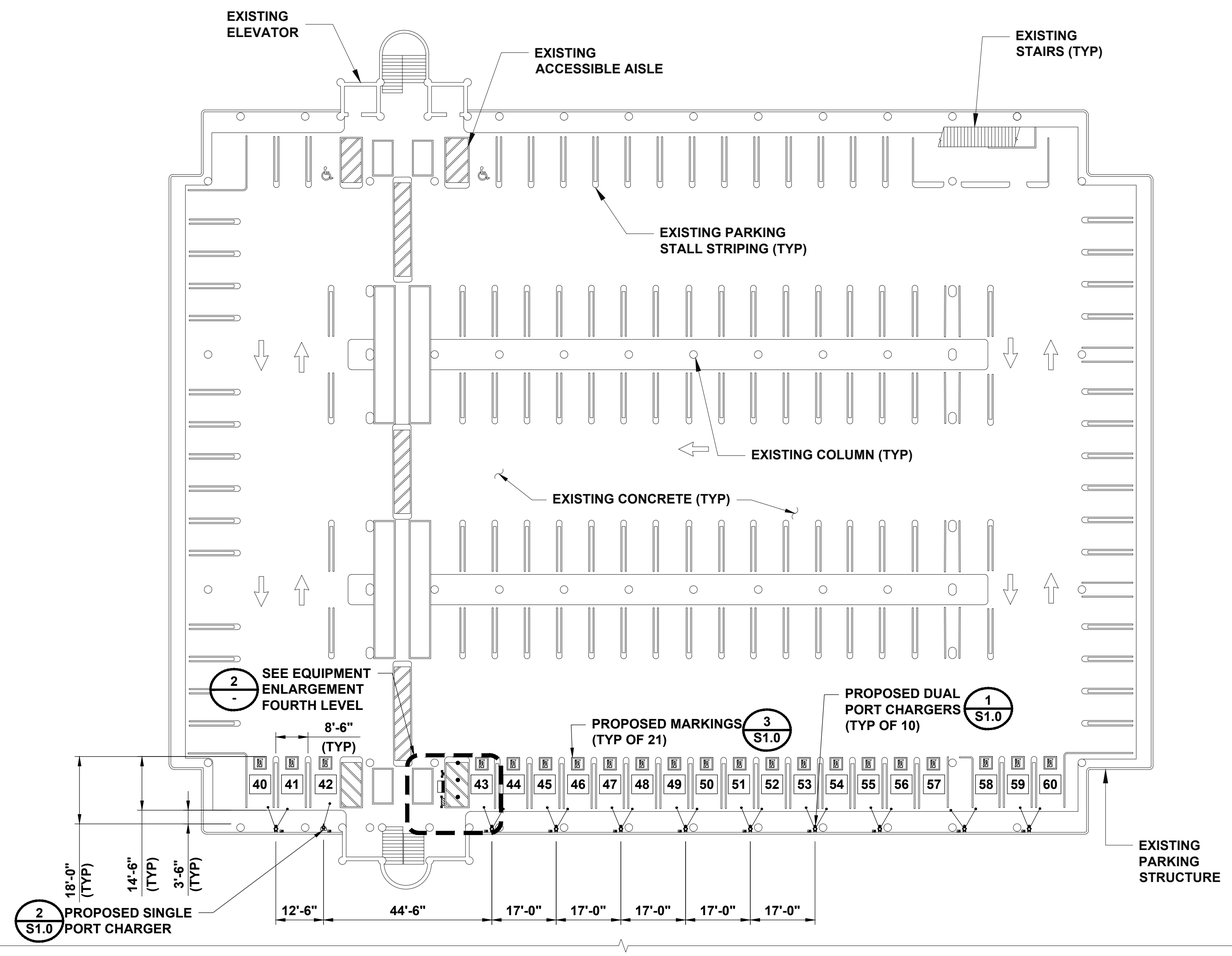

ENLARGED SITE PLAN - FOURTH LEVEL

20' 10' 0 20' 40'
1"=20'

1

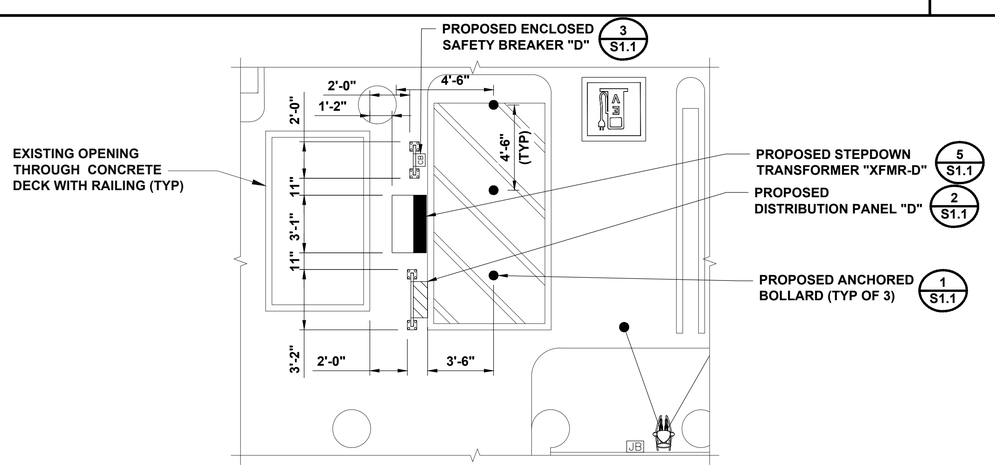

EQUIPMENT ENLARGEMENT FOURTH LEVEL

4' 0 4' 8'
1"=4'

2

PROJECT AREA STALL COUNT	
EXISTING STALL COUNT	21
PROPOSED STALL COUNT	21

PROPOSED CHARGEPOINT DISPENSER		
CHARGE PORT NUMBER	SINGLE/DUAL PORT	WALL/PEDESTAL MOUNT
40/41	DUAL	PEDESTAL
42	SINGLE	PEDESTAL
43/44	DUAL	PEDESTAL
45/46	DUAL	PEDESTAL
47/48	DUAL	PEDESTAL
49/50	DUAL	PEDESTAL
51/52	DUAL	PEDESTAL
53/54	DUAL	PEDESTAL
55/56	DUAL	PEDESTAL
57/58	DUAL	PEDESTAL
59/60	DUAL	PEDESTAL

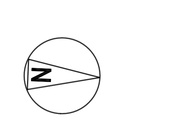

20' 10' 0 20' 40'
1"=20'

PG&E®
PACIFIC GAS AND ELECTRIC COMPANY
P.O. BOX 997300
SACRAMENTO, CA 95899-7300

CUPERTINO ELECTRIC
1132 NORTH 7TH STREET
SAN JOSE, CA 95112
(408)808-8000
C-10 LIC.NO. 174637

CONSULTANT
Blair, Church & Flynn
CONSULTING ENGINEERS
Blair, Church & Flynn Consulting Engineers
4551 Clovis Avenue, Suite 200
Clovis, California 93612
Tel (559) 326-1400
Fax (559) 326-1500

PROJECT NO:	19-1-22141-00
DRAWN BY:	ERIK OROZCO
CHECKED BY:	ROBERT FRANCIS

REV	DATE	DESCRIPTION
0	04/27/2020	ISSUED FOR 100% REVIEW

REGISTERED PROFESSIONAL ENGINEER
DAVID A. MONROE
No. 54,414
CIVIL
STATE OF CALIFORNIA
Date Signed:
NOT TO BE USED FOR CONSTRUCTION

IT IS A VIOLATION OF LAW FOR ANY PERSON, UNLESS THEY ARE ACTING UNDER THE DIRECTION OF A LICENSED PROFESSIONAL ENGINEER, TO ALTER THIS DOCUMENT.

PG&E ACCEPTANCE STAMP

PG&E PROJECT # 31471119
COUNTY OF SAN MATEO
555 COUNTY CENTER,
REDWOOD CITY, CA 94063

SHEET TITLE
ENLARGED SITE PLAN - FOURTH LEVEL

SHEET NUMBER
C1.4

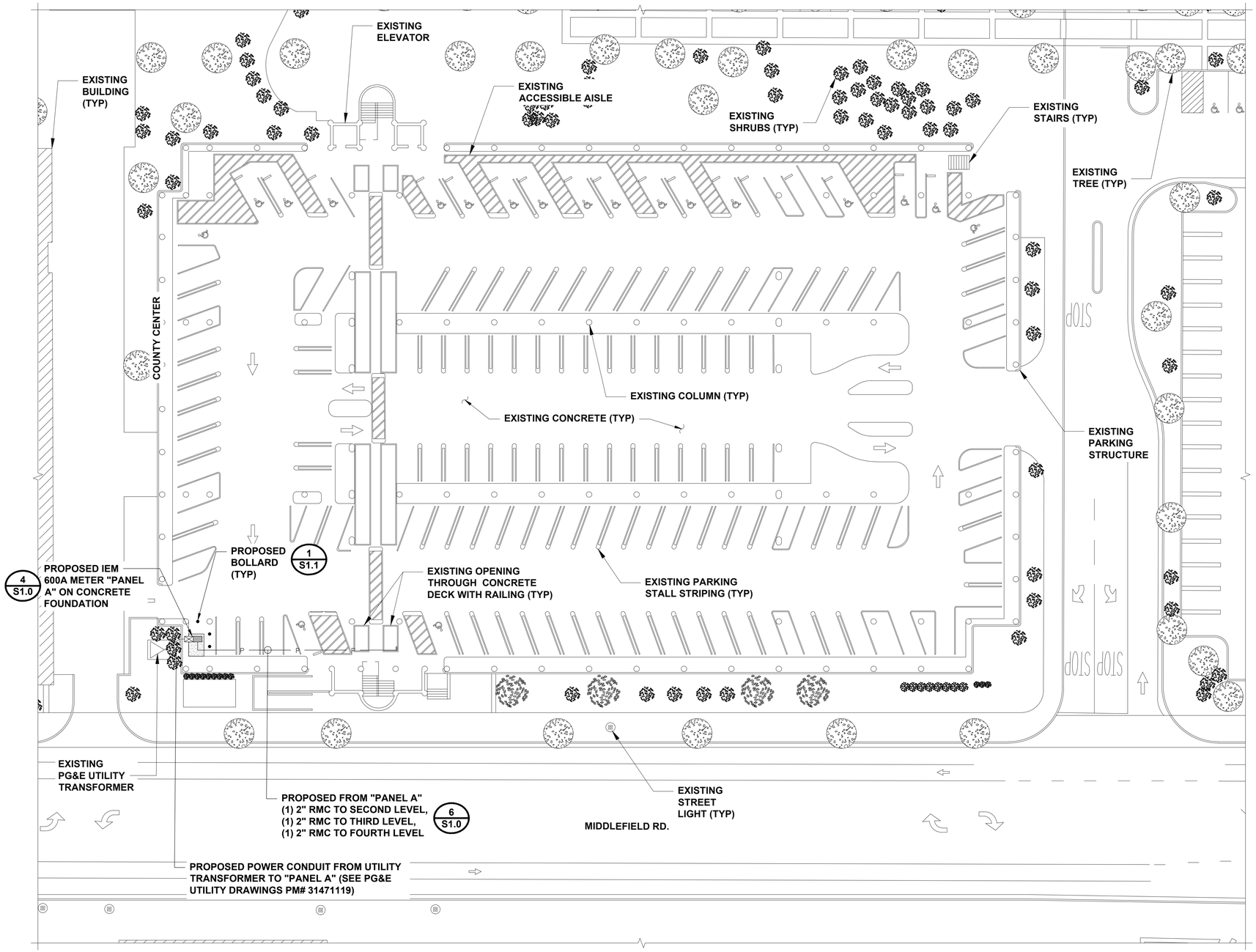

NOTES:

* AC CONDUCTOR: 20 FEET IS ADDED TO HORIZONTAL RUN LENGTH TO ACCOUNT FOR VERTICAL DEPTH AND INSTALLATION LOSSES. WHEN PULL BOXES ARE USED AN ADDITIONAL 21 FEET IS REQUIRED.

1. ALL UTILITY RELATED SCOPE OF WORK (TO THE POINT OF SERVICE) IS DETAILED IN THE PG&E UTILITY DESIGN DRAWING "PM #31471119" AND IS TO BE INSTALLED PER PG&E CPUC REGULATIONS AND PER PG&E GREENBOOK STANDARDS. CONTACT YOUR LOCAL PG&E INSPECTOR AND COORDINATOR TO DETERMINE ANY ADDITIONAL PAD AND/OR BARRICADE REQUIREMENTS.
2. CONDUIT ROUTING IS DIAGRAMMATICALLY SHOWN ON PLANS AND ARE ONLY APPROXIMATIONS. THE EXACT LOCATION AND ROUTING PATHS SHALL BE FIELD VERIFIED AND INSTALLED PER JURISDICTIONAL REQUIREMENTS.
3. ALL EQUIPMENT, FEEDERS AND DEVICES PROVIDED UNDER THIS SCOPE OF WORK IS NEW AND SHOWN IN BOLD UNLESS OTHERWISE NOTED.
4. POWER CONDUITS: NO MORE THAN THE EQUIVALENT OF FOUR 90 DEGREES BENDS (360 DEGREES TOTAL) BETWEEN PULL POINTS PER CEC 358.26. PROVIDE PULL BOXES WITH MINIMUM SIZE REQUIREMENTS PER CEC 314.28.
5. PERFORM LINE & LOCATE PRIOR TO DIGGING.

N

20' 10' 0 20' 40'

1"=20'

ELECTRICAL PLAN - GROUND LEVEL

PACIFIC GAS AND ELECTRIC COMPANY
P.O. BOX 997300
SACRAMENTO, CA 95899-7300

CUPERTINO ELECTRIC
1132 NORTH 7TH STREET
SAN JOSE, CA 95112
(408)808-8000
C-10 LIC.NO. 174637

CONSULTANT

Blair, Church & Flynn
CONSULTING ENGINEERS

Blair, Church & Flynn
Consulting Engineers
455 Clovis Avenue,
Suite 200
Clovis, California 93612
Tel (559) 326-1400
Fax (559) 326-1500

PROJECT NO:	19-1-22141-00
DRAWN BY:	ERIK OROZCO
CHECKED BY:	ROBERT FRANCIS

REV	DATE	DESCRIPTION
0	04/27/2020	ISSUED FOR 100% REVIEW

REGISTERED PROFESSIONAL ENGINEER
DAVID A. MOHRY
No. 54,414
CIVIL
STATE OF CALIFORNIA
Date Signed:

NOT TO BE USED FOR CONSTRUCTION

REGISTERED PROFESSIONAL ENGINEER
BRIAN M. DUFFY
No. E22220
ELECTRICAL
STATE OF CALIFORNIA
Date Signed:

IT IS A VIOLATION OF LAW FOR ANY PERSON, UNLESS THEY ARE ACTING UNDER THE DIRECTION OF A LICENSED PROFESSIONAL ENGINEER, TO ALTER THIS DOCUMENT.

PG&E ACCEPTANCE STAMP

PG&E PROJECT # 31471119
COUNTY OF SAN MATEO
555 COUNTY CENTER,
REDWOOD CITY, CA 94063

SHEET TITLE
ELECTRICAL PLAN - GROUND LEVEL

SHEET NUMBER
E1.0

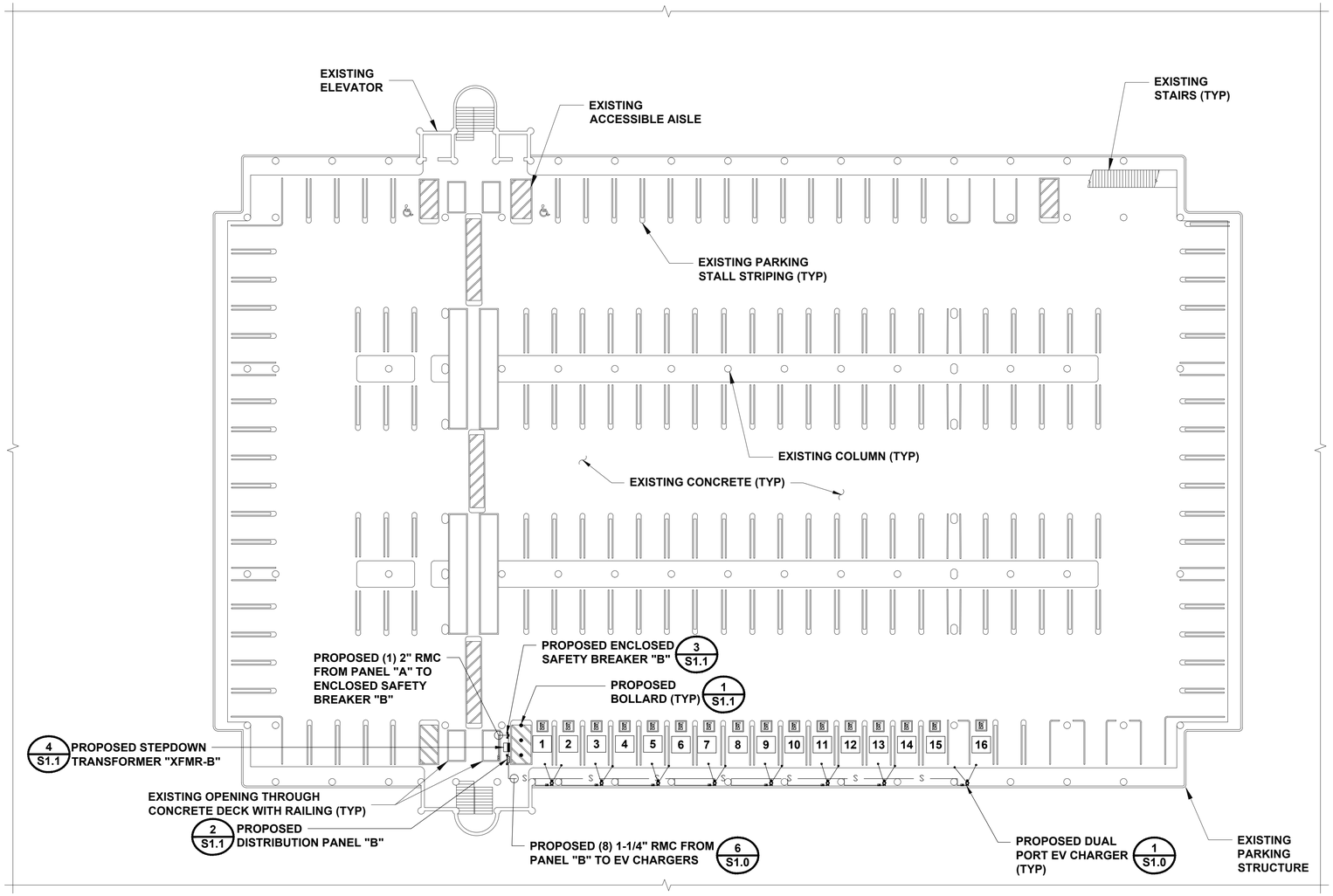

FEEDER CIRCUIT LENGTHS

FROM	TO	LINEAR LENGTH (FT)	*ESTIMATED LENGTH (FT)*	WIRE SIZE
PANEL A	ENCLOSED BREAKER "B"	11	127	3/0
ENCLOSED BREAKER "B"	XFMR-B	6	26	3/0
XFMR-B	PANEL B	6	26	2X3/0

BRANCH CIRCUIT LENGTHS

AC PANEL	LEVEL 2 EV CHARGER	LINEAR LENGTH (FT)	*ESTIMATED LENGTH (FT)*	WIRE SIZE
PANEL B	1/2	24	44	#6
PANEL B	3/4	39	59	#6
PANEL B	5/6	56	76	#6
PANEL B	7/8	73	93	#6
PANEL B	9/10	90	110	#6
PANEL B	11/12	108	128	#6
PANEL B	13/14	125	145	#6
PANEL B	15/16	150	170	#6

NOTES:

* AC CONDUCTOR: 20 FEET IS ADDED TO HORIZONTAL RUN LENGTH TO ACCOUNT FOR VERTICAL DEPTH AND INSTALLATION LOSSES. WHEN PULL BOXES ARE USED AN ADDITIONAL 21 FEET IS REQUIRED. FOR THE FEEDER CIRCUIT LENGTHS, 95 FEET WAS ADDED FOR THE HORIZONTAL AND VERTICAL RUN FROM PANEL A ON GROUND LEVEL AND 21 FEET WAS ADDED FOR VERTICAL TRAVEL PER FLOOR.

1. ALL UTILITY RELATED SCOPE OF WORK (TO THE POINT OF SERVICE) IS DETAILED IN THE PG&E UTILITY DESIGN DRAWING "PM #31471119" AND IS TO BE INSTALLED PER PG&E CPUC REGULATIONS AND PER PG&E GREENBOOK STANDARDS. CONTACT YOUR LOCAL PG&E INSPECTOR AND COORDINATOR TO DETERMINE ANY ADDITIONAL PAD AND/OR BARRICADE REQUIREMENTS.
2. CONDUIT ROUTING IS DIAGRAMMATICALLY SHOWN ON PLANS AND ARE ONLY APPROXIMATIONS. THE EXACT LOCATION AND ROUTING PATHS SHALL BE FIELD VERIFIED AND INSTALLED PER JURISDICTIONAL REQUIREMENTS.
3. ALL EQUIPMENT, FEEDERS AND DEVICES PROVIDED UNDER THIS SCOPE OF WORK IS NEW AND SHOWN IN BOLD UNLESS OTHERWISE NOTED.
4. POWER CONDUITS: NO MORE THAN THE EQUIVALENT OF FOUR 90 DEGREES BENDS (360 DEGREES TOTAL) BETWEEN PULL POINTS PER CEC 358.26. PROVIDE PULL BOXES WITH MINIMUM SIZE REQUIREMENTS PER CEC 314.28.
5. PERFORM LINE & LOCATE PRIOR TO DIGGING.

ELECTRICAL PLAN - SECOND LEVEL

20' 10' 0 20' 40'
1"=20'

PACIFIC GAS AND ELECTRIC COMPANY
P.O. BOX 997300
SACRAMENTO, CA 95899-7300

CUPERTINO ELECTRIC
1132 NORTH 7TH STREET
SAN JOSE, CA 95112
(408)808-8000
C-10 LIC.NO. 174637

CONSULTANT
Blair, Church & Flynn Consulting Engineers
451 Clovis Avenue, Suite 200
Clovis, California 93612
Tel (559) 326-1400
Fax (559) 326-1500

PROJECT NO:	19-1-22141-00
DRAWN BY:	ERIK OROZCO
CHECKED BY:	ROBERT FRANCIS

REV	DATE	DESCRIPTION
0	04/27/2020	ISSUED FOR 100% REVIEW

REGISTERED PROFESSIONAL ENGINEER DAVID A. MONRY No. 54,414 CIVIL STATE OF CALIFORNIA Date Signed:

REGISTERED PROFESSIONAL ENGINEER BRIAN M. DUFFY No. E22220 ELECTRICAL STATE OF CALIFORNIA Date Signed:

NOT TO BE USED FOR CONSTRUCTION

IT IS A VIOLATION OF LAW FOR ANY PERSON, UNLESS THEY ARE ACTING UNDER THE DIRECTION OF A LICENSED PROFESSIONAL ENGINEER, TO ALTER THIS DOCUMENT.

PG&E ACCEPTANCE STAMP

PG&E PROJECT # 31471119
COUNTY OF SAN MATEO
555 COUNTY CENTER,
REDWOOD CITY, CA 94063

SHEET TITLE
ELECTRICAL PLAN - SECOND LEVEL

SHEET NUMBER
E1.1

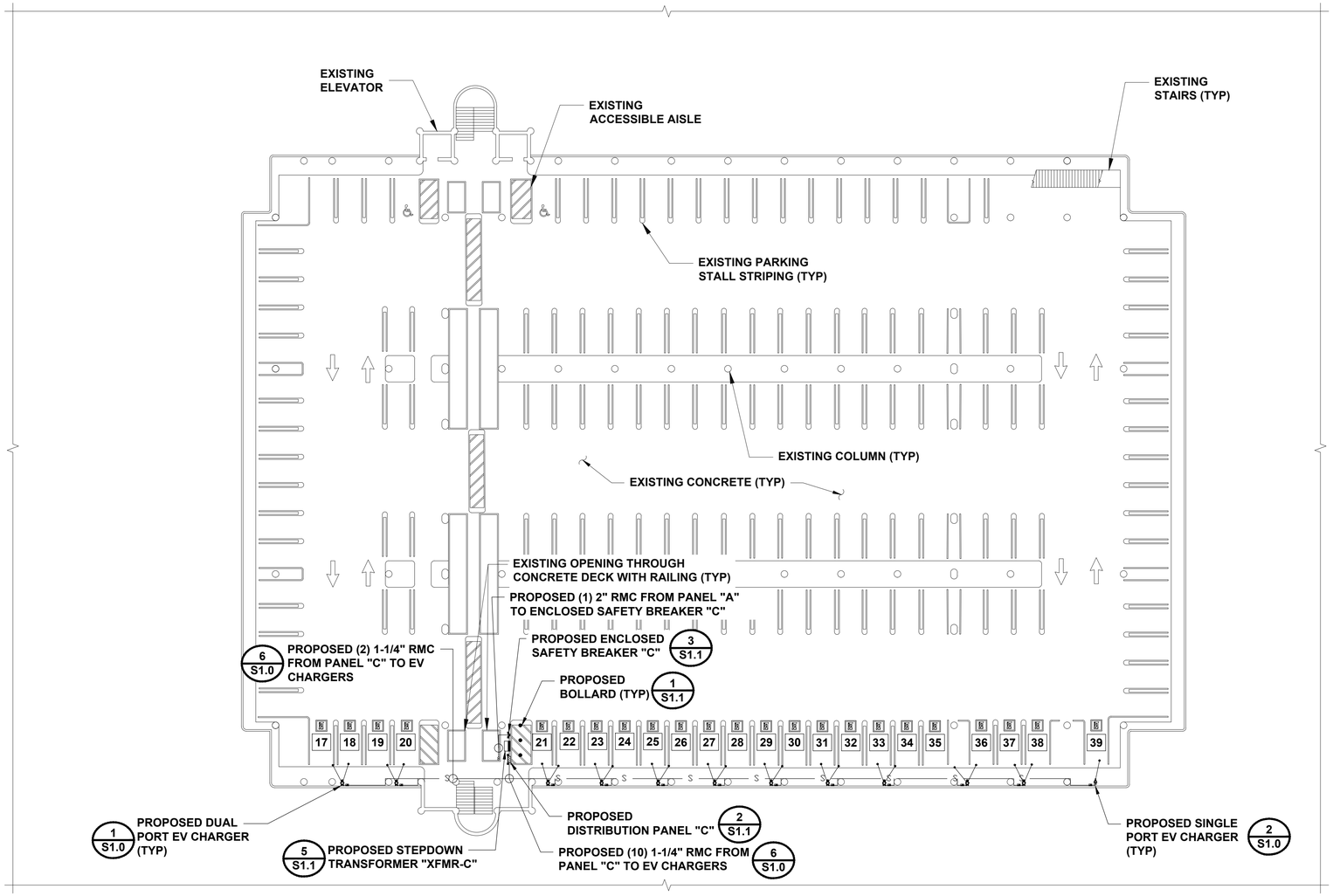

FEEDER CIRCUIT LENGTHS

FROM	TO	LINEAR LENGTH (FT)	*ESTIMATED LENGTH (FT)*	WIRE SIZE
PANEL A	ENCLOSED BREAKER "C"	11	148	3/0
ENCLOSED BREAKER "C"	XFMR-C	6	26	3/0
XFMR-C	PANEL C	6	26	2X3/0

BRANCH CIRCUIT LENGTHS

AC PANEL	LEVEL 2 EV CHARGER	LINEAR LENGTH (FT)	*ESTIMATED LENGTH (FT)*	WIRE SIZE
PANEL C	17/18	60	80	#6
PANEL C	19/20	43	63	#6
PANEL C	21/22	27	47	#6
PANEL C	23/24	45	65	#6
PANEL C	25/26	62	82	#6
PANEL C	27/28	79	99	#6
PANEL C	29/30	97	117	#6
PANEL C	31/32	114	134	#6
PANEL C	33/34	131	151	#6
PANEL C	35/36	150	170	#6
PANEL C	37/38	167	187	#4
PANEL C	39	189	209	#4

NOTES:

* AC CONDUCTOR: 20 FEET IS ADDED TO HORIZONTAL RUN LENGTH TO ACCOUNT FOR VERTICAL DEPTH AND INSTALLATION LOSSES. WHEN PULL BOXES ARE USED AN ADDITIONAL 21 FEET IS REQUIRED. FOR THE FEEDER CIRCUIT LENGTHS, 95 FEET WAS ADDED FOR THE HORIZONTAL AND VERTICAL RUN FROM PANEL A ON GROUND LEVEL AND 21 FEET WAS ADDED FOR VERTICAL TRAVEL PER FLOOR.

1. ALL UTILITY RELATED SCOPE OF WORK (TO THE POINT OF SERVICE) IS DETAILED IN THE PG&E UTILITY DESIGN DRAWING "PM #31471119" AND IS TO BE INSTALLED PER PG&E CPUC REGULATIONS AND PER PG&E GREENBOOK STANDARDS. CONTACT YOUR LOCAL PG&E INSPECTOR AND COORDINATOR TO DETERMINE ANY ADDITIONAL PAD AND/OR BARRICADE REQUIREMENTS.
2. CONDUIT ROUTING IS DIAGRAMMATICALLY SHOWN ON PLANS AND ARE ONLY APPROXIMATIONS. THE EXACT LOCATION AND ROUTING PATHS SHALL BE FIELD VERIFIED AND INSTALLED PER JURISDICTIONAL REQUIREMENTS.
3. ALL EQUIPMENT, FEEDERS AND DEVICES PROVIDED UNDER THIS SCOPE OF WORK IS NEW AND SHOWN IN BOLD UNLESS OTHERWISE NOTED.
4. POWER CONDUITS: NO MORE THAN THE EQUIVALENT OF FOUR 90 DEGREES BENDS (360 DEGREES TOTAL) BETWEEN PULL POINTS PER CEC 358.26. PROVIDE PULL BOXES WITH MINIMUM SIZE REQUIREMENTS PER CEC 314.28.
5. PERFORM LINE & LOCATE PRIOR TO DIGGING.

ELECTRICAL PLAN - THIRD LEVEL

20' 10' 0 20' 40'
1"=20'

PACIFIC GAS AND ELECTRIC COMPANY
P.O. BOX 997300
SACRAMENTO, CA 95899-7300

CUPERTINO ELECTRIC
1132 NORTH 7TH STREET
SAN JOSE, CA 95112
(408)808-8000
C-10 LIC.NO. 174637

CONSULTANT
Blair, Church & Flynn Consulting Engineers
455 Clovis Avenue, Suite 200
Clovis, California 93612
Tel (559) 326-5400
Fax (559) 326-5500

PROJECT NO:	19-1-22141-00
DRAWN BY:	ERIK OROZCO
CHECKED BY:	ROBERT FRANCIS

REV	DATE	DESCRIPTION
0	04/27/2020	ISSUED FOR 100% REVIEW

REGISTERED PROFESSIONAL ENGINEER DAVID A. MOWER No. 54,414 CIVIL STATE OF CALIFORNIA
Date Signed:

NOT TO BE USED FOR CONSTRUCTION

REGISTERED PROFESSIONAL ENGINEER BRYAN M. DUFFY No. E22220 ELECTRICAL STATE OF CALIFORNIA
Date Signed:

IT IS A VIOLATION OF LAW FOR ANY PERSON, UNLESS THEY ARE ACTING UNDER THE DIRECTION OF A LICENSED PROFESSIONAL ENGINEER, TO ALTER THIS DOCUMENT.

PG&E ACCEPTANCE STAMP

PG&E PROJECT # 31471119
COUNTY OF SAN MATEO
555 COUNTY CENTER,
REDWOOD CITY, CA 94063

SHEET TITLE
ELECTRICAL PLAN - THIRD LEVEL

SHEET NUMBER
E1.2

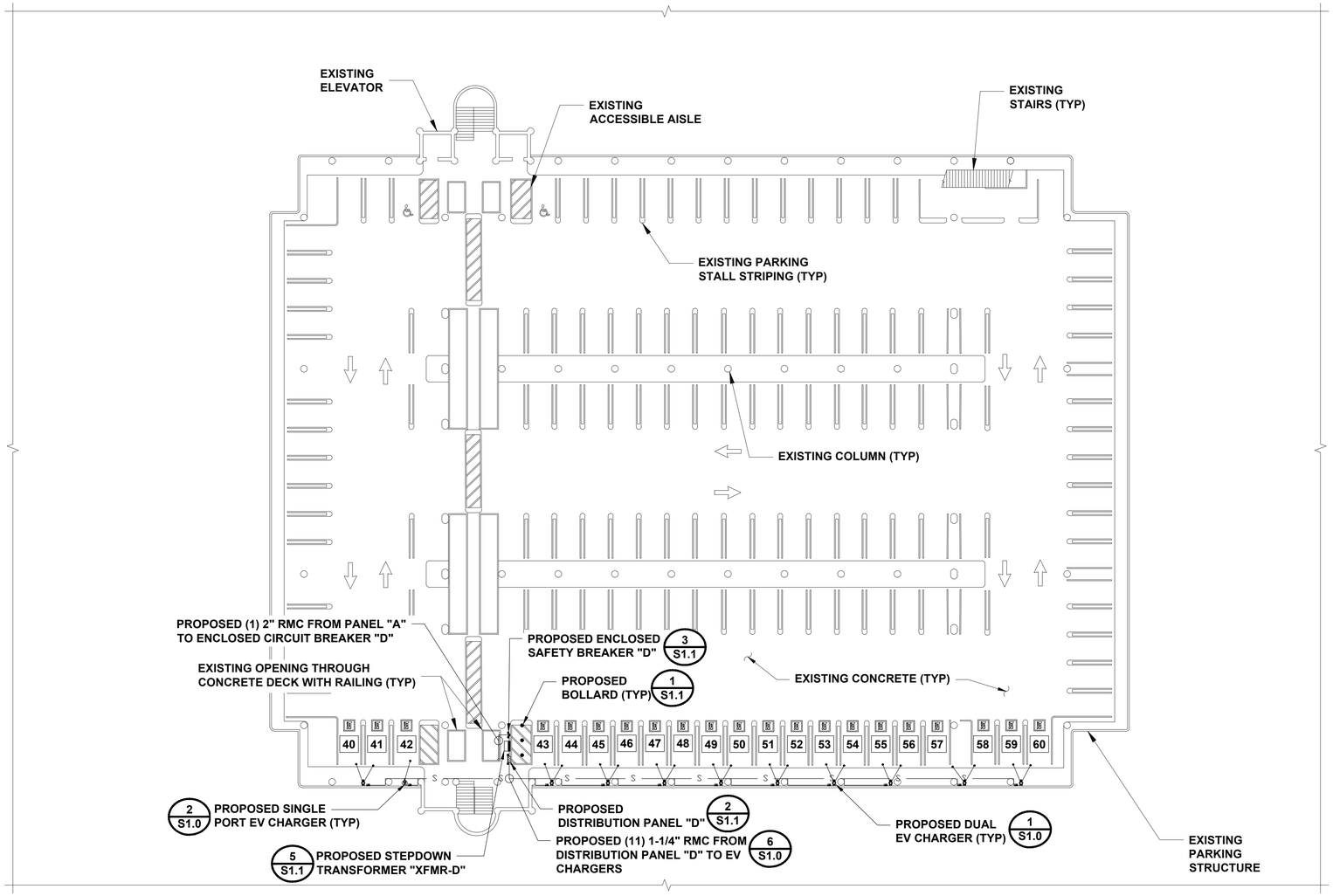

FEEDER CIRCUIT LENGTHS

FROM	TO	LINEAR LENGTH (FT)	*ESTIMATED LENGTH (FT)*	WIRE SIZE
PANEL A	ENCLOSED BREAKER "D"	11	169	3/0
ENCLOSED BREAKER "D"	XFMR-D	6	26	3/0
XFMR-D	PANEL D	6	26	2X3/0

BRANCH CIRCUIT LENGTHS

AC PANEL	LEVEL 2 EV CHARGER	LINEAR LENGTH (FT)	*ESTIMATED LENGTH (FT)*	WIRE SIZE
PANEL D	40/41	53	73	#6
PANEL D	42	41	61	#6
PANEL D	43/44	24	44	#6
PANEL D	45/46	41	61	#6
PANEL D	47/48	58	78	#6
PANEL D	49/50	75	95	#6
PANEL D	51/52	92	112	#6
PANEL D	53/54	110	130	#6
PANEL D	55/56	127	147	#6
PANEL D	57/58	149	169	#6
PANEL D	59/60	166	186	#4

NOTES:

* AC CONDUCTOR: 20 FEET IS ADDED TO HORIZONTAL RUN LENGTH TO ACCOUNT FOR VERTICAL DEPTH AND INSTALLATION LOSSES. WHEN PULL BOXES ARE USED AN ADDITIONAL 21 FEET IS REQUIRED. FOR THE FEEDER CIRCUIT LENGTHS, 95 FEET WAS ADDED FOR THE HORIZONTAL AND VERTICAL RUN FROM PANEL A ON GROUND LEVEL AND 21 FEET WAS ADDED FOR VERTICAL TRAVEL PER FLOOR.

1. ALL UTILITY RELATED SCOPE OF WORK (TO THE POINT OF SERVICE) IS DETAILED IN THE PG&E UTILITY DESIGN DRAWING "PM #31471119" AND IS TO BE INSTALLED PER PG&E CPUC REGULATIONS AND PER PG&E GREENBOOK STANDARDS. CONTACT YOUR LOCAL PG&E INSPECTOR AND COORDINATOR TO DETERMINE ANY ADDITIONAL PAD AND/OR BARRICADE REQUIREMENTS.
2. CONDUIT ROUTING IS DIAGRAMMATICALLY SHOWN ON PLANS AND ARE ONLY APPROXIMATIONS. THE EXACT LOCATION AND ROUTING PATHS SHALL BE FIELD VERIFIED AND INSTALLED PER JURISDICTIONAL REQUIREMENTS.
3. ALL EQUIPMENT, FEEDERS AND DEVICES PROVIDED UNDER THIS SCOPE OF WORK IS NEW AND SHOWN IN BOLD UNLESS OTHERWISE NOTED.
4. POWER CONDUITS: NO MORE THAN THE EQUIVALENT OF FOUR 90 DEGREES BENDS (360 DEGREES TOTAL) BETWEEN PULL POINTS PER CEC 358.26. PROVIDE PULL BOXES WITH MINIMUM SIZE REQUIREMENTS PER CEC 314.28.
5. PERFORM LINE & LOCATE PRIOR TO DIGGING.

N

20' 10' 0 20' 40'
1"=20'

ELECTRICAL PLAN - FOURTH LEVEL

PACIFIC GAS AND ELECTRIC COMPANY
P.O. BOX 997300
SACRAMENTO, CA 95899-7300

CUPERTINO ELECTRIC
1132 NORTH 7TH STREET
SAN JOSE, CA 95112
(408)808-8000
C-10 LIC.NO. 174637

CONSULTANT
Blair, Church & Flynn Consulting Engineers
451 Clovis Avenue, Suite 200
Clovis, California 93612
Tel (559) 326-1400
Fax (559) 326-1500

PROJECT NO:	19-1-22141-00
DRAWN BY:	ERIK OROZCO
CHECKED BY:	ROBERT FRANCIS

REV	DATE	DESCRIPTION
0	04/27/2020	ISSUED FOR 100% REVIEW

REGISTERED PROFESSIONAL ENGINEER DAVID A. MONKY No. 54,414 CIVIL STATE OF CALIFORNIA Date Signed:

REGISTERED PROFESSIONAL ENGINEER BRIAN M. DUFFY No. E22220 ELECTRICAL STATE OF CALIFORNIA Date Signed:

NOT TO BE USED FOR CONSTRUCTION

IT IS A VIOLATION OF LAW FOR ANY PERSON, UNLESS THEY ARE ACTING UNDER THE DIRECTION OF A LICENSED PROFESSIONAL ENGINEER, TO ALTER THIS DOCUMENT.

PG&E ACCEPTANCE STAMP

PG&E PROJECT # 31471119
COUNTY OF SAN MATEO
555 COUNTY CENTER,
REDWOOD CITY, CA 94063

SHEET TITLE
ELECTRICAL PLAN - FOURTH LEVEL

SHEET NUMBER
E1.3

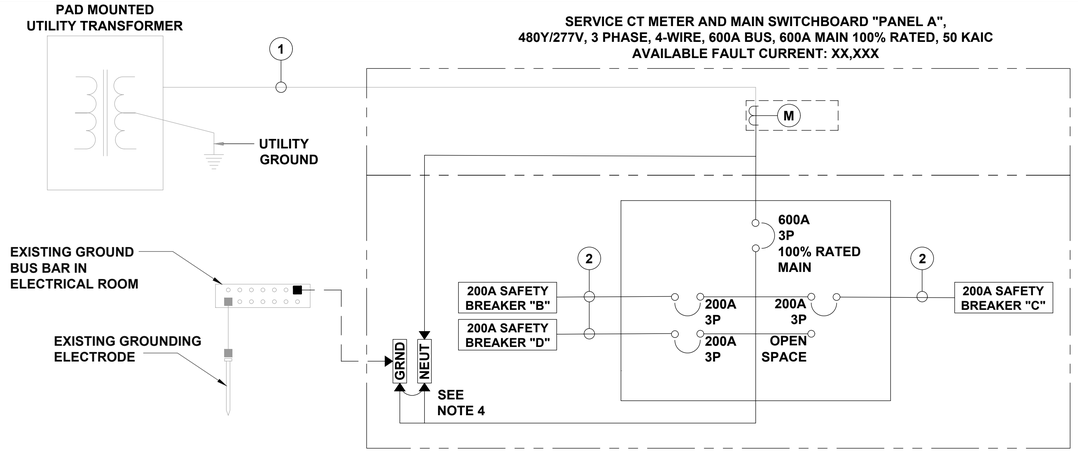

CIRCUIT NOTES

NO	FROM	TO	CONFIGURATION
1	UTILITY TRANSFORMER	MAIN METERED PANEL A	SEE PG&E UTILITY DRAWINGS (PM#31471119)
2	MAIN METERED PANEL A	200A ENCLOSED CIRCUIT BREAKER	(1) 2" RMC WITH (3) 3/0 AWG THWN-2 CU + (1) #2 AWG THWN-2 CU EGC
3	200A ENCLOSED CIRCUIT BREAKER	STEPDOWN TRANSFORMER	(1) 2" RMC WITH (3) 3/0 AWG THWN-2 CU + (1) #2 AWG THWN-2 CU EGC
4	STEPDOWN TRANSFORMER	DISTRIBUTION PANEL	(2) 2" RMC WITH (4) 3/0 AWG THWN-2 CU + (1) #2 AWG THWN-2 CU EGC IN EACH CONDUIT
5	DISTRIBUTION PANEL	EV CHARGER	SEE TABLE A FOR VOLTAGE DROP CONSIDERATIONS DUE TO CONDUCTOR LENGTH
6	DISTRIBUTION PANEL	EV CHARGER	SEE TABLE B FOR VOLTAGE DROP CONSIDERATIONS DUE TO CONDUCTOR LENGTH

AC RUN MAXIMUM LENGTHS IS 400' INCLUDING BURIED DEPTH. ANY AC RUN LENGTHS BEYOND THIS MAXIMUM SHALL BE ADDRESSED WITH THE APPROPRIATE ENGINEERING TEAMS AS SOON AS THE SITUATION ARISES.

NOTES:

1. CONTRACTOR TO FIELD VERIFY MAIN FEED BREAKER SUPPORTING DISTRIBUTION PANEL IS APPROPRIATELY SIZED TO SUPPORT THE LOAD. CONTRACTOR SHALL CONTACT THE ENGINEERING TEAM IMMEDIATELY IF BREAKER IS FOUND TO BE INSUFFICIENT.
2. CONDUCTOR LENGTHS ARE ESTIMATES ONLY. LENGTHS ARE BASED ON DIAGRAMMATICAL MEASUREMENTS AND APPROXIMATED BURIED DEPTHS. THE EXACT ROUTING PATH, CONDUCTOR RUN LENGTHS AND INSTALLATION SHALL BE DETERMINED BY THE CONTRACTOR IN THE FILED BASED ON EXISTING SITE CONDITIONS AND PHYSICAL MEASUREMENTS. CONTRACTOR TO ORDER CONDUCTOR BASED ON FIELD MEASUREMENTS.
3. CHARGING UNITS ARE EQUIPPED WITH AN INTEGRATED CONTACTOR TO PREVENT BACK FEEDING OF POWER TO THE SOURCE.
4. FOR ADDITIONAL GROUNDING INFORMATION, SEE SHEET E2.4 DETAIL 2.
5. LOAD MANAGEMENT FUNCTION SHALL BE CONFIGURED AS NEEDED SUCH THAT THE TOTAL LOAD DOES NOT EXCEED THE PANEL RATING.

MAXIMUM AC VOLTAGE DROP (%)	2.62%
AVERAGE AC VOLTAGE DROP (%)	1.85%

TABLE A (SINGLE PORT CHARGER)

<180'	180' - 290'	290' - 400'
(2) #6 AWG THWN-2 CU + (1) #8 AWG THWN-2 CU EGC IN 1 1/4" RMC CONDUIT	(2) #4 AWG THWN-2 CU + (1) #6 AWG THWN-2 CU EGC IN 1 1/4" RMC CONDUIT	(2) #3 AWG THWN-2 CU + (1) #4 AWG THWN-2 CU EGC IN 1 1/4" RMC CONDUIT

* SEE NOTE 2

TABLE B (DUAL PORT CHARGER)

<180'	180' - 290'	290' - 400'
(4) #6 AWG THWN-2 CU + (1) #8 AWG THWN-2 CU EGC IN 1 1/4" RMC CONDUIT	(4) #4 AWG THWN-2 CU + (1) #6 AWG THWN-2 CU EGC IN 1 1/4" RMC CONDUIT	(4) #3 AWG THWN-2 CU + (1) #4 AWG THWN-2 CU EGC IN 1 1/4" RMC CONDUIT

* SEE NOTE 2

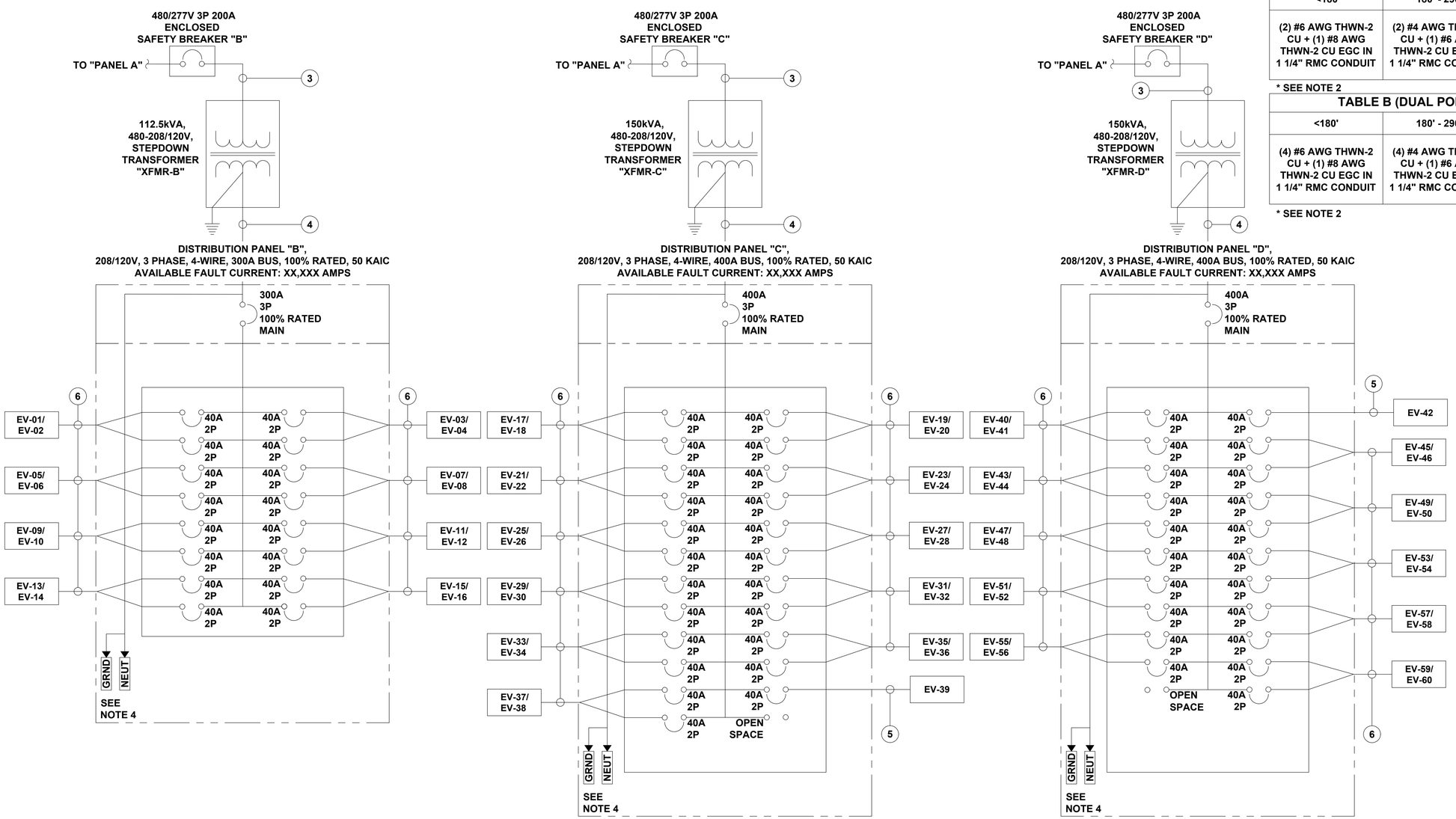

PACIFIC GAS AND ELECTRIC COMPANY
P.O. BOX 997300
SACRAMENTO, CA 95899-7300

CUPERTINO ELECTRIC
1132 NORTH 7TH STREET
SAN JOSE, CA 95112
(408)808-8000
C-10 LIC.NO. 174637

CONSULTANT
Blair, Church & Flynn
CONSULTING ENGINEERS
Blair, Church & Flynn
Consulting Engineers
450 Clovis Avenue,
Suite 200
Clovis, California 93612
Tel (559) 326-5400
Fax (559) 326-1500

PROJECT NO:	19-1-22141-00
DRAWN BY:	ERIK OROZCO
CHECKED BY:	ROBERT FRANCIS

REV	DATE	DESCRIPTION
0	04/27/2020	ISSUED FOR 100% REVIEW

REGISTERED PROFESSIONAL ENGINEER
DAVID A. MONRY
No. 54,414
CIVIL
STATE OF CALIFORNIA
Date Signed:

REGISTERED PROFESSIONAL ENGINEER
BRIAN M. DUFFY
No. E22220
ELECTRICAL
STATE OF CALIFORNIA
Date Signed:

NOT TO BE USED FOR CONSTRUCTION

IT IS A VIOLATION OF LAW FOR ANY PERSON, UNLESS THEY ARE ACTING UNDER THE DIRECTION OF A LICENSED PROFESSIONAL ENGINEER, TO ALTER THIS DOCUMENT.

PG&E ACCEPTANCE STAMP

PG&E PROJECT # 31471119
COUNTY OF SAN MATEO
555 COUNTY CENTER,
REDWOOD CITY, CA 94063

SHEET TITLE
SINGLE LINE DIAGRAM

SHEET NUMBER
E1.4

NOTE:

LOAD MANAGEMENT FUNCTION SHALL BE CONFIGURED AS NEEDED SUCH THAT THE TOTAL LOAD DOES NOT EXCEED THE PANEL RATING.

Site Name:	COUNTY OF SAN MATEO		MODEL NUMBER:	PGELP600A4802773-12	
SITE NUMBER:	19-1-22141-00		PHASE:	3	WIRE: 4
VOLTAGE:	480 /277	Volts AC	BUSS RATING:	600 AMPS	100% RATED
MAIN BREAKER:	600 AMPS	100% RATED	KAIC RATING:	50	
MOUNT:	PEDESTAL				
ENCLOSURE TYPE:	NEMA 3R				
PANEL STATUS:	New				

CKT	LOAD DESCRIPTION	BREAKER AMPS	BREAKER POLES	BREAKER STATUS	SERVICE LOAD VA	Demand Factor	USAGE FACTOR	PHASE A VA	PHASE B VA	PHASE C VA	USAGE FACTOR	Demand Factor	SERVICE LOAD VA	BREAKER STATUS	BREAKER POLES	BREAKER AMPS	LOAD DESCRIPTION	CKT
1	SAFETY BREAKER "B"	200	3	NEW	37440	1.00	1.00	87360			1.00	1.00	49920	NEW	2	40	SAFETY BREAKER "C"	2
3		200	3	NEW	31200	1.00	1.00		78000		1.00	1.00	46800	NEW	2	40		4
5		200	3	NEW	31200	1.00	1.00			78000	1.00	1.00	46800	NEW	2	40		6
7	SAFETY BREAKER "D"	200	3	NEW	46800	1.00	1.00	46800			0.00	0.00	0	-	-	-	-	8
9		200	3	NEW	43680	1.00	1.00		43680		0.00	0.00	0	-	-	-		10
11		200	3	NEW	40560	1.00	1.00			40560	0.00	0.00	0	-	-	-		12
								PHASE A	PHASE B	PHASE C								
								134160	121680	118560	VA							
										TOTAL	KVA	374.40						
											AMPS	450.33	≤ 100% OF MAIN BREAKER					

PANEL A SCHEDULE

NO SCALE

1

PACIFIC GAS AND ELECTRIC COMPANY
P.O. BOX 997300
SACRAMENTO, CA 95899-7300

CUPERTINO ELECTRIC
1132 NORTH 7TH STREET
SAN JOSE, CA 95112
(408)808-8000
C-10 LIC.NO. 174637

CONSULTANT
Blair, Church & Flynn Consulting Engineers
450 Clovis Avenue, Suite 200
Clovis, California 93612
Tel (559) 326-1400
Fax (559) 326-1500

PROJECT NO:	19-1-22141-00
DRAWN BY:	ERIK OROZCO
CHECKED BY:	ROBERT FRANCIS

REV	DATE	DESCRIPTION
0	04/27/2020	ISSUED FOR 100% REVIEW

REGISTERED PROFESSIONAL ENGINEER DAVID A. MURRY No. 54,414 CIVIL STATE OF CALIFORNIA
Date Signed:

REGISTERED PROFESSIONAL ENGINEER BRIAN M. DUFFY No. E22220 ELECTRICAL STATE OF CALIFORNIA
Date Signed:

NOT TO BE USED FOR CONSTRUCTION

IT IS A VIOLATION OF LAW FOR ANY PERSON, UNLESS THEY ARE ACTING UNDER THE DIRECTION OF A LICENSED PROFESSIONAL ENGINEER, TO ALTER THIS DOCUMENT.

PG&E ACCEPTANCE STAMP

PG&E PROJECT # 31471119
COUNTY OF SAN MATEO
555 COUNTY CENTER,
REDWOOD CITY, CA 94063

SHEET TITLE
ELECTRICAL DETAILS - PANEL A

SHEET NUMBER
E2.0

NOTE:

LOAD MANAGEMENT FUNCTION SHALL BE CONFIGURED AS NEEDED SUCH THAT THE TOTAL LOAD DOES NOT EXCEED THE PANEL RATING.

Site Name:	COUNTY OF SAN MATEO		MODEL NUMBER:	PGELP300A 1202083-32	
SITE NUMBER:	19-1-22141-00		PHASE:	3	WIRE: 4
VOLTAGE:	208 /120	Volts AC	BUSS RATING:	300 AMPS	100% RATED
MAIN BREAKER:	300 AMPS	100% RATED	KAIC RATING:	50	
MOUNT:	PEDESTAL				
ENCLOSURE TYPE:	NEMA 3R				
PANEL STATUS:	New				

CKT	LOAD DESCRIPTION	BREAKER AMPS	BREAKER POLES	BREAKER STATUS	SERVICE LOAD VA	Demand Factor	USAGE FACTOR	PHASE A VA	PHASE B VA	PHASE C VA	USAGE FACTOR	Demand Factor	SERVICE LOAD VA	BREAKER STATUS	BREAKER POLES	BREAKER AMPS	LOAD DESCRIPTION	CKT
1	EV-01	40	2	NEW	3120	1.00	1.00	6240			1.00	1.00	3120	NEW	2	40	EV-03	2
3		40	2	NEW	3120	1.00	1.00		6240		1.00	1.00	3120	NEW	2	40		4
5	EV-02	40	2	NEW	3120	1.00	1.00			6240	1.00	1.00	3120	NEW	2	40	EV-04	6
7		40	2	NEW	3120	1.00	1.00	6240			1.00	1.00	3120	NEW	2	40		8
9	EV-05	40	2	NEW	3120	1.00	1.00		6240		1.00	1.00	3120	NEW	2	40	EV-07	10
11		40	2	NEW	3120	1.00	1.00			6240	1.00	1.00	3120	NEW	2	40		12
13	EV-06	40	2	NEW	3120	1.00	1.00	6240			1.00	1.00	3120	NEW	2	40	EV-08	14
15		40	2	NEW	3120	1.00	1.00		6240		1.00	1.00	3120	NEW	2	40		16
17	EV-09	40	2	NEW	3120	1.00	1.00			6240	1.00	1.00	3120	NEW	2	40	EV-11	18
19		40	2	NEW	3120	1.00	1.00	6240			1.00	1.00	3120	NEW	2	40		20
21	EV-10	40	2	NEW	3120	1.00	1.00		6240		1.00	1.00	3120	NEW	2	40	EV-12	22
23		40	2	NEW	3120	1.00	1.00			6240	1.00	1.00	3120	NEW	2	40		24
25	EV-13	40	2	NEW	3120	1.00	1.00	6240			1.00	1.00	3120	NEW	2	40	EV-15	26
27		40	2	NEW	3120	1.00	1.00		6240		1.00	1.00	3120	NEW	2	40		28
29	EV-14	40	2	NEW	3120	1.00	1.00			6240	1.00	1.00	3120	NEW	2	40	EV-16	30
31		40	2	NEW	3120	1.00	1.00	6240			1.00	1.00	3120	NEW	2	40		32
								PHASE A	PHASE B	PHASE C								
								37440	31200	31200	VA							
										TOTAL	KVA	99.84						
											AMPS	277.13	≤ 100% OF MAIN BREAKER					

PANEL B SCHEDULE

NO SCALE

1

PACIFIC GAS AND ELECTRIC COMPANY
P.O. BOX 997300
SACRAMENTO, CA 95899-7300

CUPERTINO ELECTRIC
1132 NORTH 7TH STREET
SAN JOSE, CA 95112
(408)808-8000
C-10 LIC.NO. 174637

CONSULTANT
Blair, Church & Flynn
CONSULTING ENGINEERS
Blair, Church & Flynn Consulting Engineers
455 Clovis Avenue, Suite 200
Clovis, California 93612
Tel (559) 326-1400
Fax (559) 326-1500

PROJECT NO:	19-1-22141-00
DRAWN BY:	ERIK OROZCO
CHECKED BY:	ROBERT FRANCIS

REV	DATE	DESCRIPTION
0	04/27/2020	ISSUED FOR 100% REVIEW

REGISTERED PROFESSIONAL ENGINEER DAVID A. MONKT No. 54,414 CIVIL STATE OF CALIFORNIA Date Signed:

REGISTERED PROFESSIONAL ENGINEER BRIAN M. DUFFY No. E22220 ELECTRICAL STATE OF CALIFORNIA Date Signed:

NOT TO BE USED FOR CONSTRUCTION

IT IS A VIOLATION OF LAW FOR ANY PERSON, UNLESS THEY ARE ACTING UNDER THE DIRECTION OF A LICENSED PROFESSIONAL ENGINEER, TO ALTER THIS DOCUMENT.

PG&E ACCEPTANCE STAMP

PG&E PROJECT # 31471119
COUNTY OF SAN MATEO
555 COUNTY CENTER,
REDWOOD CITY, CA 94063

SHEET TITLE

ELECTRICAL DETAILS - PANEL B

SHEET NUMBER

E2.1

NOTE:

LOAD MANAGEMENT FUNCTION SHALL BE CONFIGURED AS NEEDED SUCH THAT THE TOTAL LOAD DOES NOT EXCEED THE PANEL RATING.

Site Name:	COUNTY OF SAN MATEO	MODEL NUMBER:	PGELP400A1202083-48
SITE NUMBER:	19-1-22141-00	PHASE:	3
VOLTAGE:	208 /120 Volts AC	BUSS RATING:	400 AMPS 100% RATED
MAIN BREAKER:	400 AMPS 100% RATED	KAIC RATING:	50
MOUNT:	PEDESTAL		
ENCLOSURE TYPE:	NEMA 3R		
PANEL STATUS:	New		

WIRE: 4

CKT	LOAD DESCRIPTION	BREAKER AMPS	BREAKER POLES	BREAKER STATUS	SERVICE LOAD VA	Demand Factor	USAGE FACTOR	PHASE A VA	PHASE B VA	PHASE C VA	USAGE FACTOR	Demand Factor	SERVICE LOAD VA	BREAKER STATUS	BREAKER POLES	BREAKER AMPS	LOAD DESCRIPTION	CKT
1	EV-17	40	2	NEW	3120	1.00	1.00	6240			1.00	1.00	3120	NEW	2	40	EV-19	2
3		40	2	NEW	3120	1.00	1.00		6240		1.00	1.00	3120	NEW	2	40		4
5	EV-18	40	2	NEW	3120	1.00	1.00			6240	1.00	1.00	3120	NEW	2	40	EV-20	6
7		40	2	NEW	3120	1.00	1.00	6240			1.00	1.00	3120	NEW	2	40		8
9	EV-21	40	2	NEW	3120	1.00	1.00		6240		1.00	1.00	3120	NEW	2	40	EV-23	10
11		40	2	NEW	3120	1.00	1.00			6240	1.00	1.00	3120	NEW	2	40		12
13	EV-22	40	2	NEW	3120	1.00	1.00	6240			1.00	1.00	3120	NEW	2	40	EV-24	14
15		40	2	NEW	3120	1.00	1.00		6240		1.00	1.00	3120	NEW	2	40		16
17	EV-25	40	2	NEW	3120	1.00	1.00			6240	1.00	1.00	3120	NEW	2	40	EV-27	18
19		40	2	NEW	3120	1.00	1.00	6240			1.00	1.00	3120	NEW	2	40		20
21	EV-26	40	2	NEW	3120	1.00	1.00		6240		1.00	1.00	3120	NEW	2	40	EV-28	22
23		40	2	NEW	3120	1.00	1.00			6240	1.00	1.00	3120	NEW	2	40		24
25	EV-29	40	2	NEW	3120	1.00	1.00	6240			1.00	1.00	3120	NEW	2	40	EV-31	26
27		40	2	NEW	3120	1.00	1.00		6240		1.00	1.00	3120	NEW	2	40		28
29	EV-30	40	2	NEW	3120	1.00	1.00			6240	1.00	1.00	3120	NEW	2	40	EV-32	30
31		40	2	NEW	3120	1.00	1.00	6240			1.00	1.00	3120	NEW	2	40		32
33	EV-33	40	2	NEW	3120	1.00	1.00		6240		1.00	1.00	3120	NEW	2	40	EV-35	34
35		40	2	NEW	3120	1.00	1.00			6240	1.00	1.00	3120	NEW	2	40		36
37	EV-34	40	2	NEW	3120	1.00	1.00	6240			1.00	1.00	3120	NEW	2	40	EV-36	38
39		40	2	NEW	3120	1.00	1.00		6240		1.00	1.00	3120	NEW	2	40		40
41	EV-37	40	2	NEW	3120	1.00	1.00			6240	1.00	1.00	3120	NEW	2	40	EV-39	42
43		40	2	NEW	3120	1.00	1.00	6240			1.00	1.00	3120	NEW	2	40		44
45	EV-38	40	2	NEW	3120	1.00	1.00		3120		0.00	0.00	0	-	-	-	-	46
47		40	2	NEW	3120	1.00	1.00			3120	0.00	0.00	0	-	-	-		48
								PHASE A	PHASE B	PHASE C								
								49920	46800	46800	VA							
										TOTAL	KVA	143.52						
											AMPS	398.37	≤ 100% OF MAIN BREAKER					

PANEL C SCHEDULE

NO SCALE

1

PACIFIC GAS AND ELECTRIC COMPANY
P.O. BOX 997300
SACRAMENTO, CA 95899-7300

CUPERTINO ELECTRIC
1132 NORTH 7TH STREET
SAN JOSE, CA 95112
(408)808-8000
C-10 LIC.NO. 174637

CONSULTANT
Blair, Church & Flynn Consulting Engineers
450 Clovis Avenue, Suite 200
Clovis, California 93612
Tel (559) 326-5400
Fax (559) 326-5500

PROJECT NO:	19-1-22141-00
DRAWN BY:	ERIK OROZCO
CHECKED BY:	ROBERT FRANCIS

REV	DATE	DESCRIPTION
0	04/27/2020	ISSUED FOR 100% REVIEW

REGISTERED PROFESSIONAL ENGINEER DAVID A. MOWRY No. 54,414 CIVIL STATE OF CALIFORNIA
Date Signed:

REGISTERED PROFESSIONAL ENGINEER ERICKAN M. DUFFY No. E22220 ELECTRICAL STATE OF CALIFORNIA
Date Signed:

NOT TO BE USED FOR CONSTRUCTION

IT IS A VIOLATION OF LAW FOR ANY PERSON, UNLESS THEY ARE ACTING UNDER THE DIRECTION OF A LICENSED PROFESSIONAL ENGINEER, TO ALTER THIS DOCUMENT.

PG&E ACCEPTANCE STAMP

PG&E PROJECT # 31471119
COUNTY OF SAN MATEO
555 COUNTY CENTER,
REDWOOD CITY, CA 94063

SHEET TITLE
ELECTRICAL DETAILS - PANEL C

SHEET NUMBER
E2.2

NOTE:
LOAD MANAGEMENT FUNCTION SHALL BE CONFIGURED AS NEEDED SUCH THAT THE TOTAL LOAD DOES NOT EXCEED THE PANEL RATING.

Site Name:	COUNTY OF SAN MATEO		MODEL NUMBER:	PGELP400A1202083-44	
SITE NUMBER:	19-1-22141-00		PHASE:	3	WIRE: 4
VOLTAGE:	208 /120	Volts AC	BUSS RATING:	400 AMPS	100% RATED
MAIN BREAKER:	400 AMPS	100% RATED	KAIC RATING:	50	
MOUNT:	PEDESTAL				
ENCLOSURE TYPE:	NEMA 3R				
PANEL STATUS:	New				

CKT	LOAD DESCRIPTION	BREAKER AMPS	BREAKER POLES	BREAKER STATUS	SERVICE LOAD VA	Demand Factor	USAGE FACTOR	PHASE A VA	PHASE B VA	PHASE C VA	USAGE FACTOR	Demand Factor	SERVICE LOAD VA	BREAKER STATUS	BREAKER POLES	BREAKER AMPS	LOAD DESCRIPTION	CKT
1	EV-40	40	2	NEW	3120	1.00	1.00	6240			1.00	1.00	3120	NEW	2	40	EV-42	2
3		40	2	NEW	3120	1.00	1.00		6240		1.00	1.00	3120	NEW	2	40		4
5	EV-41	40	2	NEW	3120	1.00	1.00			6240	1.00	1.00	3120	NEW	2	40	EV-45	6
7		40	2	NEW	3120	1.00	1.00	6240			1.00	1.00	3120	NEW	2	40		8
9	EV-43	40	2	NEW	3120	1.00	1.00		6240		1.00	1.00	3120	NEW	2	40	EV-46	10
11		40	2	NEW	3120	1.00	1.00			6240	1.00	1.00	3120	NEW	2	40		12
13	EV-44	40	2	NEW	3120	1.00	1.00	6240			1.00	1.00	3120	NEW	2	40	EV-49	14
15		40	2	NEW	3120	1.00	1.00		6240		1.00	1.00	3120	NEW	2	40		16
17	EV-47	40	2	NEW	3120	1.00	1.00			6240	1.00	1.00	3120	NEW	2	40	EV-50	18
19		40	2	NEW	3120	1.00	1.00	6240			1.00	1.00	3120	NEW	2	40		20
21	EV-48	40	2	NEW	3120	1.00	1.00		6240		1.00	1.00	3120	NEW	2	40	EV-53	22
23		40	2	NEW	3120	1.00	1.00			6240	1.00	1.00	3120	NEW	2	40		24
25	EV-51	40	2	NEW	3120	1.00	1.00	6240			1.00	1.00	3120	NEW	2	40	EV-54	26
27		40	2	NEW	3120	1.00	1.00		6240		1.00	1.00	3120	NEW	2	40		28
29	EV-52	40	2	NEW	3120	1.00	1.00			6240	1.00	1.00	3120	NEW	2	40	EV-57	30
31		40	2	NEW	3120	1.00	1.00	6240			1.00	1.00	3120	NEW	2	40		32
33	EV-55	40	2	NEW	3120	1.00	1.00		6240		1.00	1.00	3120	NEW	2	40	EV-58	34
35		40	2	NEW	3120	1.00	1.00			6240	1.00	1.00	3120	NEW	2	40		36
37	EV-56	40	2	NEW	3120	1.00	1.00	6240			1.00	1.00	3120	NEW	2	40	EV-59	38
39		40	2	NEW	3120	1.00	1.00		6240		1.00	1.00	3120	NEW	2	40		40
41	-	-	-	-	0	0.00	0.00			3120	1.00	1.00	3120	NEW	2	40	EV-60	42
43		-	-	-	0	0.00	0.00	3120			1.00	1.00	3120	NEW	2	40		44
								PHASE A	PHASE B	PHASE C								
								46800	43680	40560	VA							
										TOTAL	KVA	131.04						
											AMPS	363.73	≤ 100% OF MAIN BREAKER					

PANEL D SCHEDULE

NO SCALE

1

PG&E

PACIFIC GAS AND ELECTRIC COMPANY
P.O. BOX 997300
SACRAMENTO, CA 95899-7300

CUPERTINO ELECTRIC
1132 NORTH 7TH STREET
SAN JOSE, CA 95112
(408)808-8000
C-10 LIC.NO. 174637

CONSULTANT
Blair, Church & Flynn
CONSULTING ENGINEERS
Blair, Church & Flynn Consulting Engineers
450 Clovis Avenue, Suite 200
Clovis, California 93612
Tel (559) 326-1400
Fax (559) 326-1500

PROJECT NO:	19-1-22141-00
DRAWN BY:	ERIK OROZCO
CHECKED BY:	ROBERT FRANCIS

REV	DATE	DESCRIPTION
0	04/27/2020	ISSUED FOR 100% REVIEW

REGISTERED PROFESSIONAL ENGINEER DAVID A. MOWRY No. 54,414 CIVIL STATE OF CALIFORNIA Date Signed:
REGISTERED PROFESSIONAL ENGINEER BRIAN M. DUFFY No. E22220 ELECTRICAL STATE OF CALIFORNIA Date Signed:
NOT TO BE USED FOR CONSTRUCTION

IT IS A VIOLATION OF LAW FOR ANY PERSON, UNLESS THEY ARE ACTING UNDER THE DIRECTION OF A LICENSED PROFESSIONAL ENGINEER, TO ALTER THIS DOCUMENT.

PG&E ACCEPTANCE STAMP

PG&E PROJECT # 31471119
COUNTY OF SAN MATEO
555 COUNTY CENTER,
REDWOOD CITY, CA 94063

SHEET TITLE
ELECTRICAL DETAILS - PANEL D

SHEET NUMBER
E2.3

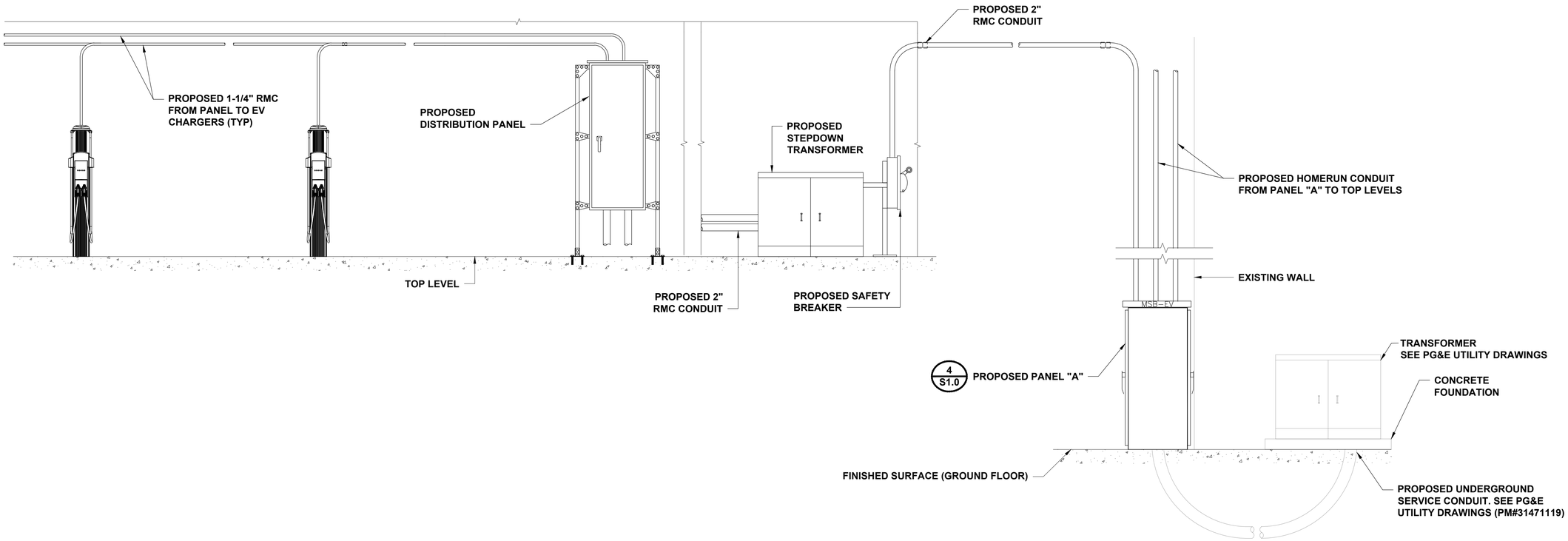

CAR CHARGER CONDUIT ELEVATION | NO SCALE | 1

GROUNDING NOTES

1. COAT ALL SURFACES WITH AN ANTI-OXIDANT COMPOUND BEFORE MATING.
2. FOR GROUND BOND TO STEEL ONLY: INSERT A CADMIUM FLAT WASHER BETWEEN LUG AND STEEL, COAT ALL SURFACES WITH AN ANTI-OXIDANT COMPOUND BEFORE MATING.
3. ENSURE THE WIRE INSULATION TERMINATION IS WITHIN 1/8" OF THE BARREL (NO SHINERS).
4. ALL BELOW GRADE BONDS TO BE EXOTHERMIC WELDS OR IRREVERSIBLE COMPRESSION-TYPE CONNECTIONS LISTED FOR USE IN THE APPLICATION WHICH THEY ARE INSTALLED.
5. GROUNDING CONDUCTORS ARE GENERALLY NOT SHOWN. GROUND AND BOND ALL EQUIPMENT, RACEWAYS, MOTORS, PANELBOARDS AND SWITCHBOARDS, ETC. IN ACCORDANCE WITH NEC/CEC, ARTICLE 250.

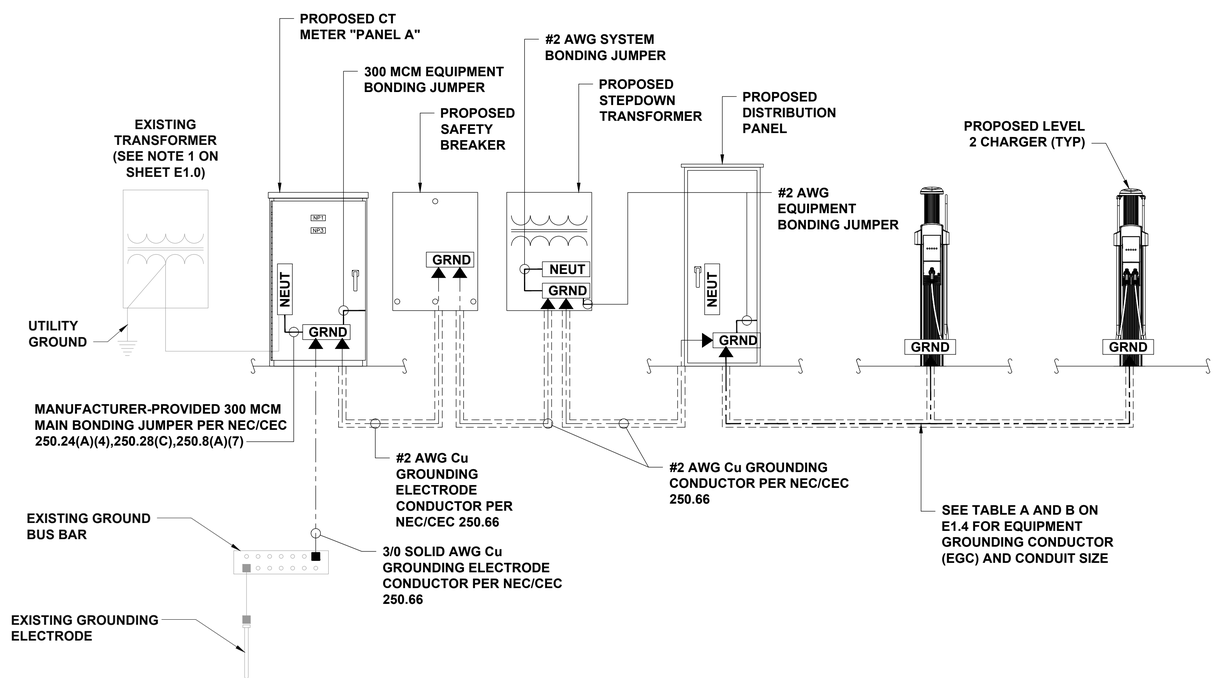

GROUNDING DETAIL | NO SCALE | 2

PACIFIC GAS AND ELECTRIC COMPANY
P.O. BOX 997300
SACRAMENTO, CA 95899-7300

CUPERTINO ELECTRIC
1132 NORTH 7TH STREET
SAN JOSE, CA 95112
(408)808-8000
C-10 LIC.NO. 174637

CONSULTANT
Blair, Church & Flynn Consulting Engineers
450 Clovis Avenue, Suite 200
Clovis, California 93612
Tel (559) 326-5400
Fax (559) 326-5500

PROJECT NO:	19-1-22141-00
DRAWN BY:	ERIK OROZCO
CHECKED BY:	ROBERT FRANCIS

REV	DATE	DESCRIPTION
0	04/27/2020	ISSUED FOR 100% REVIEW

REGISTERED PROFESSIONAL ENGINEER DAVID A. MOWRY No. 54,414 CIVIL STATE OF CALIFORNIA
Date Signed:
NOT TO BE USED FOR CONSTRUCTION
REGISTERED PROFESSIONAL ENGINEER BRIAN M. DUFFY No. E22220 ELECTRICAL STATE OF CALIFORNIA
Date Signed:

IT IS A VIOLATION OF LAW FOR ANY PERSON, UNLESS THEY ARE ACTING UNDER THE DIRECTION OF A LICENSED PROFESSIONAL ENGINEER, TO ALTER THIS DOCUMENT.

PG&E ACCEPTANCE STAMP

PG&E PROJECT # 31471119
COUNTY OF SAN MATEO
555 COUNTY CENTER,
REDWOOD CITY, CA 94063

SHEET TITLE
ELECTRICAL DETAILS

SHEET NUMBER
E2.4

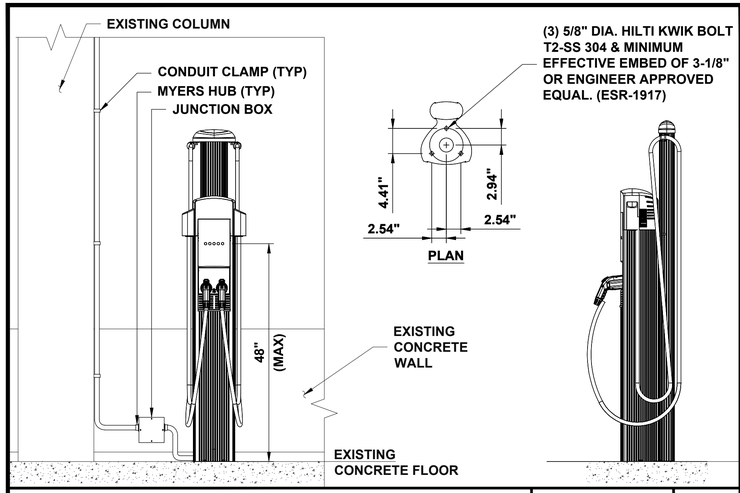

DUAL PORT DISPENSER DETAIL (CHARGEPOINT) | NO SCALE | 1

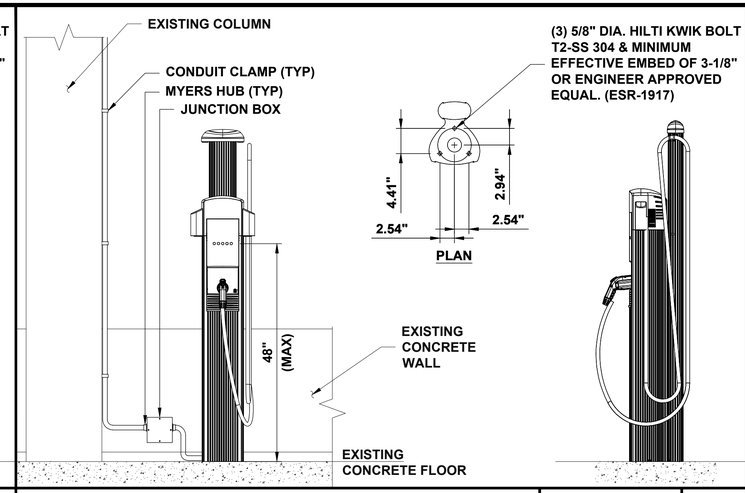

SINGLE PORT DISPENSER DETAIL (CHARGEPOINT) | NO SCALE | 2

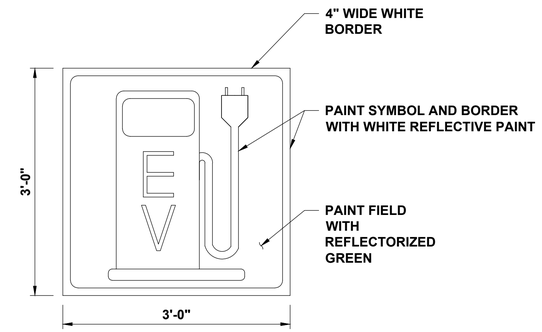

TYPICAL EV LOGO DETAIL | NO SCALE | 3

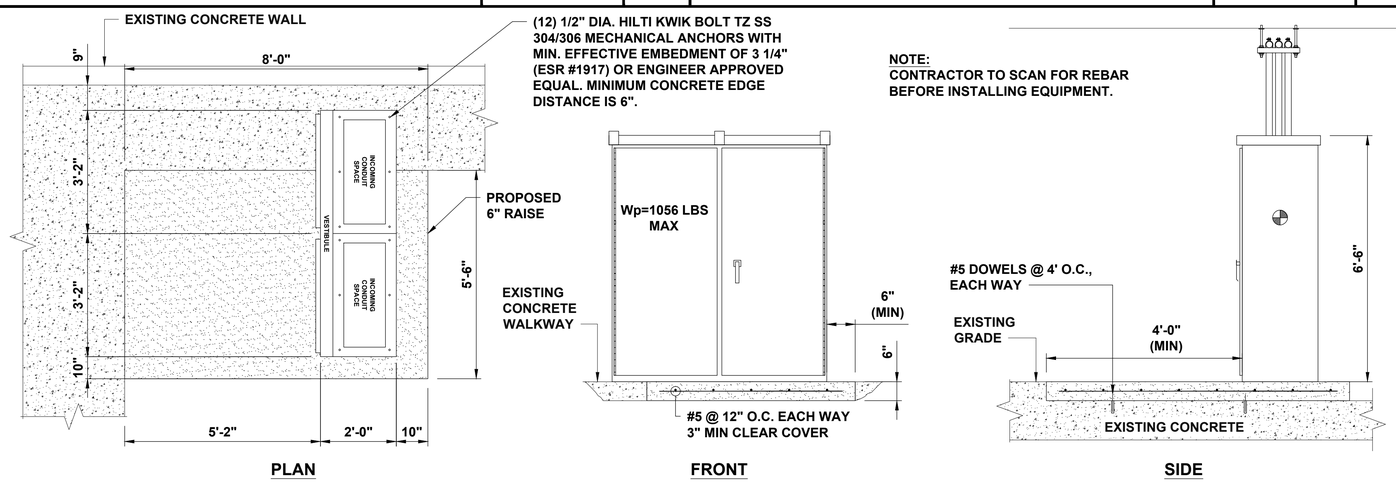

NOTE:
CONTRACTOR TO SCAN FOR REBAR BEFORE INSTALLING EQUIPMENT.

600 AMP METER PANEL | NO SCALE | 4

ARC FLASH AND SHOCK HAZARD APPROPRIATE PPE REQUIRED

DO NOT OPERATE CONTROLS OR OPEN COVERS WITHOUT APPROPRIATE PERSONAL PROTECTION EQUIPMENT.
FAILURE TO COMPLY MAY RESULT IN INJURY OR DEATH!

ARC FLASH PPE CATEGORY 2. 5FT AFB - PER NFPA 70E. TABLE 130.7 (C) (15) (A) (B)

ELECTRIC VEHICLE CHARGING STATIONS MAIN SHUT OFF SWITCH 600 AMP MAIN BREAKER

PEDESTAL LABELS | NO SCALE | 5

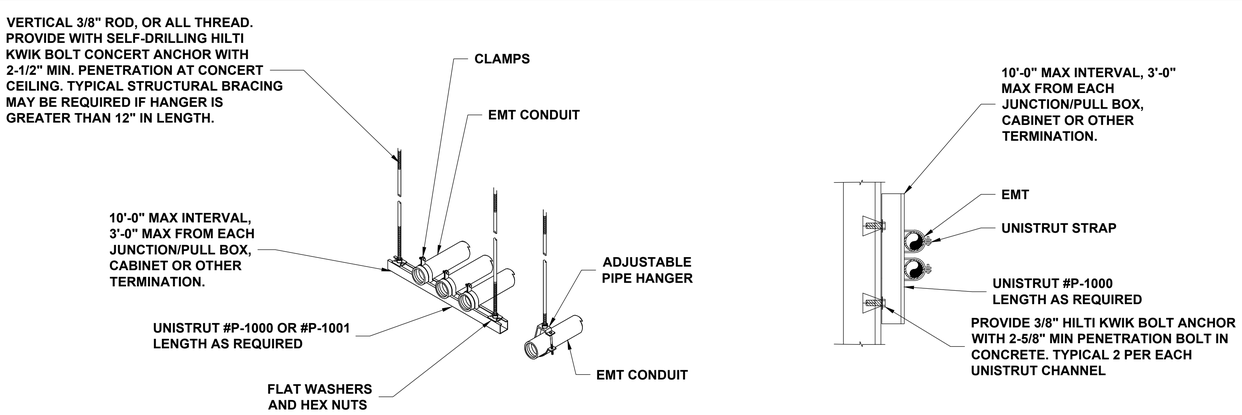

CONDUIT SUPPORT DETAIL | NO SCALE | 6

NOTE
1. LABEL CAN BE APPLIED WITH A THIN ADHESIVE FOR POSITIONING, THEN SECURED WITH (2) #6 SELF-TAPPING SCREWS.

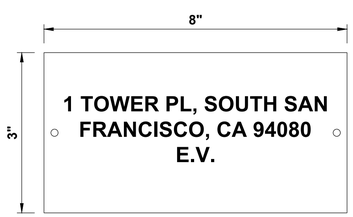

PANEL LABEL DETAIL | NO SCALE | 7

PACIFIC GAS AND ELECTRIC COMPANY
P.O. BOX 997300
SACRAMENTO, CA 95899-7300

CUPERTINO ELECTRIC
1132 NORTH 7TH STREET
SAN JOSE, CA 95112
(408)808-8000
C-10 LIC.NO. 174637

CONSULTANT
Blair, Church & Flynn Consulting Engineers
450 Clovis Avenue, Suite 200
Clovis, California 93612
Tel (559) 326-1400
Fax (559) 326-1500

PROJECT NO:	19-1-22141-00
DRAWN BY:	ERIK OROZCO
CHECKED BY:	ROBERT FRANCIS

REV	DATE	DESCRIPTION
0	04/27/2020	ISSUED FOR 100% REVIEW

REGISTERED PROFESSIONAL ENGINEER DAVID A. MONROE No. 54,414 CIVIL STATE OF CALIFORNIA Date Signed:
NOT TO BE USED FOR CONSTRUCTION

IT IS A VIOLATION OF LAW FOR ANY PERSON, UNLESS THEY ARE ACTING UNDER THE DIRECTION OF A LICENSED PROFESSIONAL ENGINEER, TO ALTER THIS DOCUMENT.

PG&E ACCEPTANCE STAMP

PG&E PROJECT # 31470885
1 TOWER PLACE
1 TOWER PL, SOUTH SAN FRANCISCO, CA 94080

SHEET TITLE
EQUIPMENT DETAILS

SHEET NUMBER
S1.0

NOTE:

1. LOCATE FIXED BOLLARDS SO THAT THEY DO NOT INTERFERE WITH THE OPENING OF EQUIPMENT DOORS.
2. CONTRACTOR TO LOCATE EXISTING SLAB REINFORCEMENT WITH GPR OR X-RAY PRIOR TO DRILLING ANCHOR HOLES. CUTTING EXISTING REBAR IS NOT PERMITTED.

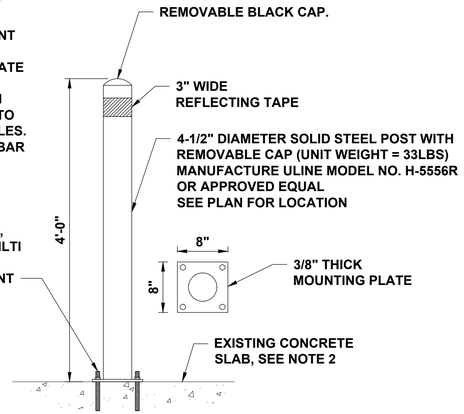

ANCHORED BOLLARD | NO SCALE | 1

NOTE:

1. CONTRACTOR TO FIELD LOCATE CROSS BEAMS FOR PANEL SUPPORT

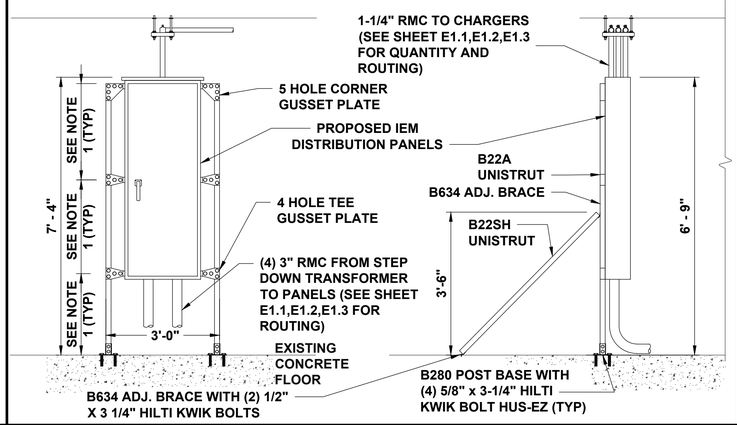

UNISTRUT MOUNTED DISTRIBUTION PANELS | NO SCALE | 2

NOTE:

1. CONTRACTOR TO FIELD LOCATE CROSS BEAMS FOR PANEL SUPPORT

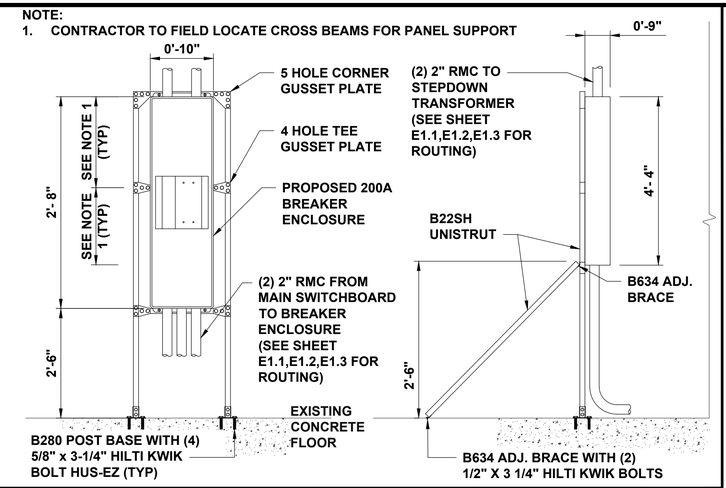

UNISTRUT MOUNTED 200A BREAKER ENCLOSURE | NO SCALE | 3

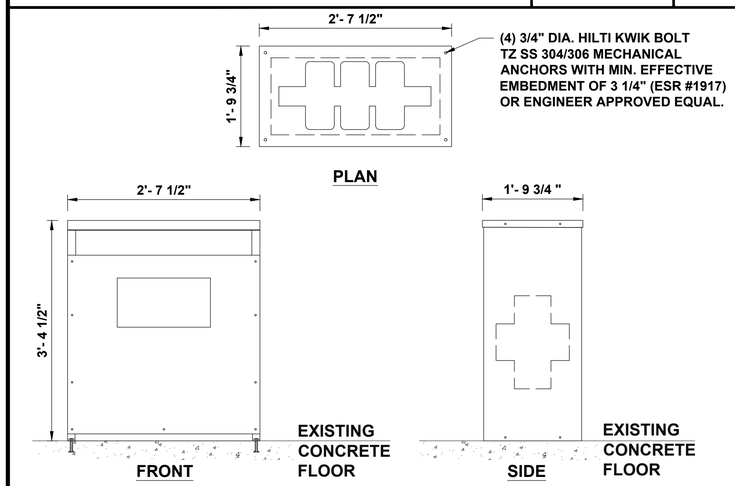

112.5KVA STEPDOWN TRANSFORMER | NO SCALE | 4

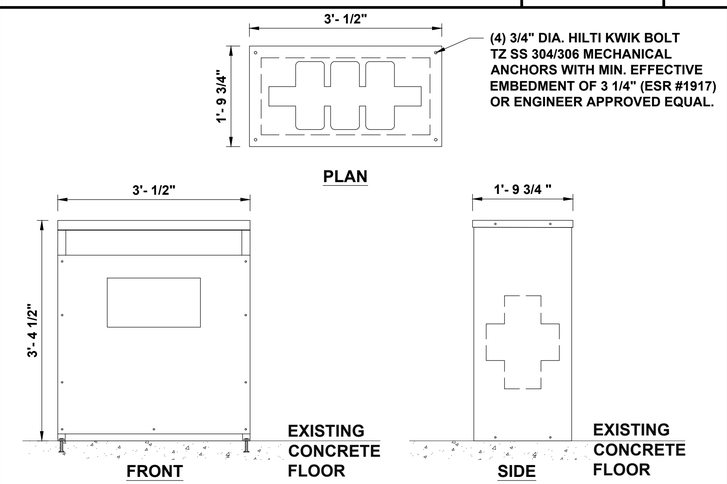

150KVA STEPDOWN TRANSFORMER | NO SCALE | 5

PACIFIC GAS AND ELECTRIC COMPANY
P.O. BOX 997300
SACRAMENTO, CA 95899-7300

CUPERTINO ELECTRIC
1132 NORTH 7TH STREET
SAN JOSE, CA 95112
(408)808-8000
C-10 LIC.NO. 174637

CONSULTANT
Blair, Church & Flynn
CONSULTING ENGINEERS
Blair, Church & Flynn Consulting Engineers
450 Clovis Avenue, Suite 200
Clovis, California 93612
Tel (559) 326-1400
Fax (559) 326-1500

PROJECT NO:	19-1-22141-00
DRAWN BY:	ERIK OROZCO
CHECKED BY:	ROBERT FRANCIS

REV	DATE	DESCRIPTION
0	04/27/2020	ISSUED FOR 100% REVIEW

REGISTERED PROFESSIONAL ENGINEER
DAVID A. MONIFF
No. 54,414
CIVIL
STATE OF CALIFORNIA
Date Signed:

NOT TO BE USED FOR CONSTRUCTION

IT IS A VIOLATION OF LAW FOR ANY PERSON, UNLESS THEY ARE ACTING UNDER THE DIRECTION OF A LICENSED PROFESSIONAL ENGINEER, TO ALTER THIS DOCUMENT.

PG&E ACCEPTANCE STAMP

PG&E PROJECT # 31471119
COUNTY OF SAN MATEO
555 COUNTY CENTER,
REDWOOD CITY, CA 94063

SHEET TITLE
EQUIPMENT DETAILS

SHEET NUMBER
S1.1

chargepoint

CT4000 Level 2 Commercial Charging Stations

Specifications and Ordering Information

Ordering Information

Specify model number followed by the applicable code(s). The order code sequence is: **Model-Options**. **Software, Services** and **Misc** are ordered as separate line items.

Hardware

Description		Order Code
Model	1830 mm (6') Single Port Bollard Mount 1830 mm (6') Dual Port Bollard Mount	CT4011 CT4021
	1830 mm (6') Single Port Wall Mount 1830 mm (6') Dual Port Wall Mount	CT4013 CT4023
	2440 mm (8') Dual Port Bollard Mount 2440 mm (8') Dual Port Wall Mount	CT4025 CT4027
Options	Integral Gateway Modem - USA Integral Gateway Modem - Canada	-GW1 -GW2
Misc	Power Management Kit Bollard Concrete Mounting Kit	CT4000-PMGMT CT4001-CCM

Software & Services

Description	Order Code
ChargePoint Commercial Service Plan	CTSW-SAS-COMM-*n*[1]
ChargePoint Service Provider Plan	CTSW-SAS-SP-*n*[1]
ChargePoint Assure	CT4000-ASURE*n*[2]
Station Activation and Configuration	CPSUPPORT-ACTIVE
ChargePoint Station Installation and Validation	CT4000-INSTALLVALID

Note: All CT4000 stations come with 1 year of ChargePoint Assure coverage at no charge for qualified installations. Other conditions apply. All CT4000 stations require a network service plan.

[1] Substitute *n* for desired years of service (1, 2, 3, 4, or 5 years).
[2] Substitute *n* for the duration of the additional coverage (1, 2, 3, or 4 years).

Order Code Examples

If ordering this	the order code is
1830 mm (6') Dual Port Bollard USA Gateway Station with Concrete Mounting Kit	CT4021-GW1 CT4001-CCM
ChargePoint Commercial Service Plan, 3 Year Subscription	CTSW-SAS-COMM-3
ChargePoint Station Installation and Validation	CT4000-INSTALLVALID
2 Additional Years of Assure Coverage	CT4000-ASSURE2
1830 mm (6') Single Port Wall Mount Station	CT4013
ChargePoint Commercial Service Plan, 5 Year Subscription	CTSW-SAS-COMM-5
4 Additional Years of Assure Coverage	CT4000-ASSURE4
Station Activation and Configuration	CPSUPPORT-ACTIVE

CT4021

CT4021 1830 mm (6')
CT4025 2440 mm (8')
Bollard

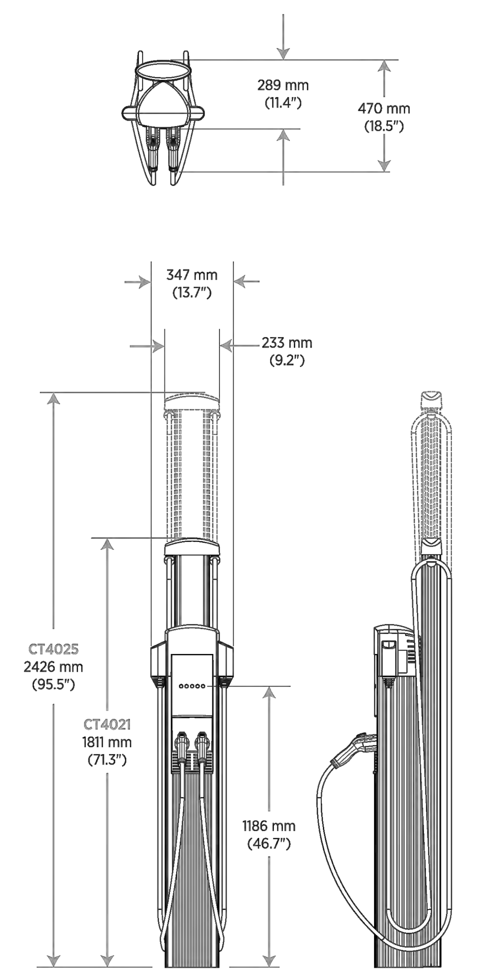

CT4023 1830 mm (6')
CT4027 2440 mm (8')
Wall Mount

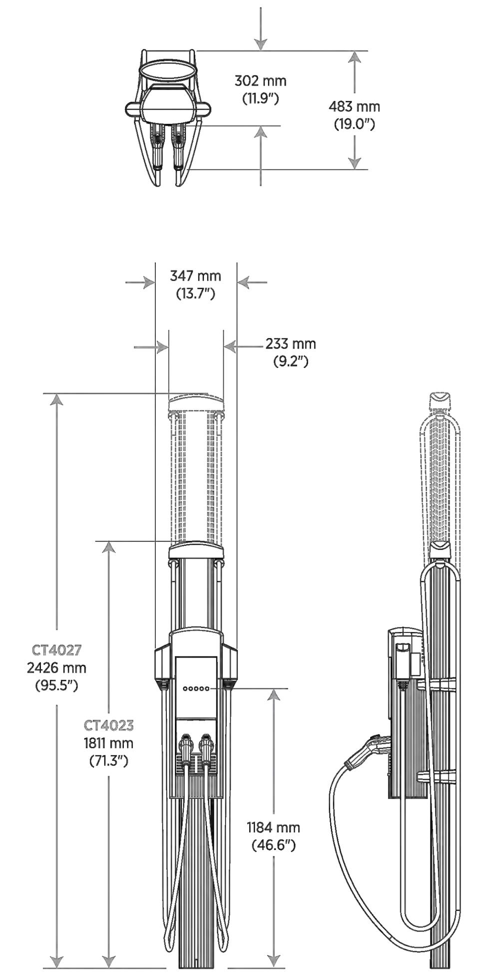

chargepoint

CT4000 Family Specifications

Electrical Input	Single Port (AC Voltage 208/240V AC)			Dual Port (AC Voltage 208/240V AC)		
	Input Current	Input Power Connection	Required Service Panel Breaker	Input Current	Input Power Connection	Required Service Panel Breaker
Standard	30A	One 40A branch circuit	40A dual pole (non-GFCI type)	30A x 2	Two independent 40A branch circuits	40A dual pole (non-GFCI type) x 2
Standard Power Share	n/a	n/a	n/a	32A	One 40A branch circuit	40A dual pole (non-GFCI type)
Power Select 24A	24A	One 30A branch circuit	30A dual pole (non-GFCI type)	24A x 2	Two independent 30A branch circuits	30A dual pole (non-GFCI type) x 2
Power Select 24A Power Share	n/a	n/a	n/a	24A	One 30A branch circuit	30A dual pole (non-GFCI type)
Power Select 16A	16A	One 20A branch circuit	20A dual pole (non-GFCI type)	16A x 2	Two independent 20A branch circuits	20A dual pole (non-GFCI type) x 2
Power Select 16A Power Share	n/a	n/a	n/a	16A	One 20A branch circuit	20A dual pole (non-GFCI type)
Service Panel GFCI	Do not provide external GFCI as it may conflict with internal GFCI (CCID)					
Wiring - Standard	3-wire (L1, L2, Earth)			5-wire (L1, L1, L2, L2, Earth)		
Wiring - Power Share	n/a			3-wire (L1, L2, Earth)		
Station Power	8W typical (standby), 15W maximum (operation)					

Electrical Output

Standard	7.2kW (240V AC @ 30A)	7.2kW (240V AC@30A) x 2
Standard Power Share	n/a	7.2kW (240V AC@30A) x 1 **or** 3.8kW (240V AC@16A) x 2
Power Select 24A	5.8kW (240V AC@24A)	5.8kW (240V AC@24A) x 2
Power Select 24A Power Share	n/a	5.8kW (240V AC@24A) x 1 **or** 2.9kW (240V AC@12A) x 2
Power Select 16A	3.8kW (240V AC@16A)	3.8kW (240V AC@16A) x 2
Power Select 24A Power Share	n/a	3.8kW (240V AC@16A) x 1 **or** 1.9kW (240V AC@8A) x 2

Functional Interfaces

Connector(s) Type	SAE J1772™	SAE J1772™ x 2
Cable Length - 1830 mm (6') Cable Management	5.5 m (18')	5.5 m (18') x 2
Cable Length - 2440 mm (8') Cable Management	n/a	7 m (23')
Overhead Cable Management System	Yes	
LCD Display	145 mm (5.7") full color, 640x480, 30fps full motion video, active matrix, UV protected	
Card Reader	ISO 15693, ISO 14443, NFC	
Locking Holster	Yes	Yes x 2

Safety and Connectivity Features

Ground Fault Detection	20mA CCID with auto retry
Open Safety Ground Detection	Continuously monitors presence of safety (green wire) ground connection
Plug-Out Detection	Power terminated per SAE J1772™ specifications
Power Measurement Accuracy	+/- 2% from 2% to full scale (30A)
Power Report/Store Interval	15 minute, aligned to hour
Local Area Network	2.4 GHz Wi-Fi (802.11 b/g/n)
Wide Area Network	3G GSM, 3G CDMA

Safety and Operational Ratings

Enclosure Rating	Type 3R per UL 50E
Safety Compliance	UL listed for USA and cUL certified for Canada; complies with UL 2594, UL 2231-1, UL 2231-2, and NEC Article 625
Surge Protection	6kV @ 3000A. In geographic areas subject to frequent thunder storms, supplemental surge protection at the service panel is recommended.
EMC Compliance	FCC Part 15 Class A
Operating Temperature	-30°C to +50°C (-22°F to 122°F)
Storage Temperature	-30°C to +60°C (-22°F to 140°F)
Non-Operating Temperature	-40°C to +60°C (-40°F to 140°F)
Operating Humidity	Up to 85% @ +50°C (122°F) non-condensing
Non-Operating Humidity	Up to 95% @ +50°C (122°F) non-condensing
Terminal Block Temperature Rating	105°C (221°F)
Charging Stations per 802.11 Radio Group	Maximum of 10. Each station must be located within 45m (150') "line of sight" of a gateway station.

ChargePoint, Inc. reserves the right to alter product offerings and specifications at any time without notice, and is not responsible for typographical or graphical errors that may appear in this document.

Contact Us

To order your CT4000 charging station:

- Visit chargepoint.com/sales
- Call +1.408.705.1992
- Email sales@chargepoint.com

chargepoint

ChargePoint, Inc.
254 East Hacienda Avenue | Campbell, CA | 95008-6617 USA
+1.408.841.4500 or toll free +1.877.370.3802
chargepoint.com

Copyright © 2016 ChargePoint, Inc. All rights reserved. CHARGEPOINT is a U.S. registered trademark/service mark, and an EU registered logo mark of ChargePoint, Inc. All other products or services mentioned are the trademarks, service marks, registered trademarks or registered service marks of their respective owners. DS-CT4000-03. February 2016. PN 73-001020-01-9.

Printed on paper made with 100% post-consumer fiber and 100% certified renewable energy, and processed chlorine free.

100% Recycled Fiber PCF

Listed by Underwriters Laboratories Inc. c UL us LISTED

EV CHARGER | NO SCALE | 1

	114261	MAIN SWITCHBOARD "EV-CHARGER" FOR PG&E		

IEM NAMEPLATE SCHEDULE (ORDER # 114261-1)

NP#	QTY	LETTER SIZE	INSCRIPTION	COLOR	SIZE
1 (△3)	1	0.25"	MAIN SWITCHBOARD PGEHP600A480/277/2-200/1-150	BLACK	2 x 5
2	1	0.25"	PANEL "EV"	BLACK	2 x 5
3	1	0.25"	ELECTRIC VEHICLE CHARGING STATION MAIN SHUT OFF SWITCH (INSIDE THE CABINET)	BLACK	2 x 5
4	1	0.25"	555 COUNTY CENTER REDWOOD CITY, CA 94063 E.V.	BLACK	3 x 8

REVISION HISTORY:

REV	DESCRIPTION	INT.	MM/DD/YYYY
0	DRAWINGS FOR APPROVAL	EMFH	4/3/2020
1	ADDED CT'S TO BOM	EMFH	4/8/2020
2	UPDATED PAINT COLOR TO ANSI 61 GREY PER CN#52819	EMFH	4/15/2020
3	UPDATED NP#1, ADDED MISSING BUS AND CHANGED 250A C/B'S TO 200A PER C/N#53121	EMFH	4/21/2020

DRAWING INDEX:

PAGE	SHEET	DESCRIPTION	INT.	LAST REV
1	1_FV_01	FRONT VIEW	EMFH	3
2	1_BOM_01	BILL OF MATERIAL & ONE LINE & METER SOCKET DIAGRAM	EMFH	3

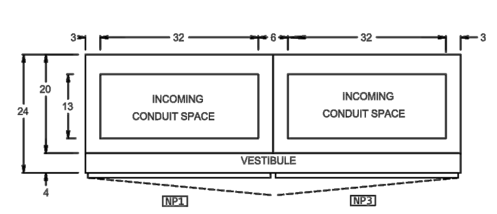

PLAN VIEW

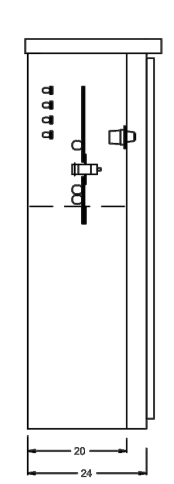
SIDE INTERIOR VIEW (CT COMPARTMENT)

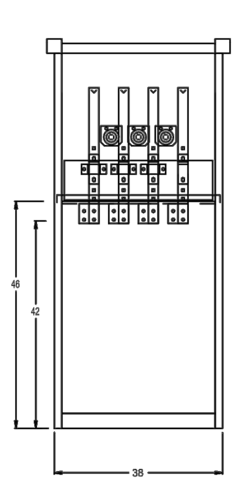
FRONT INTERIOR VIEW (CT COMPARTMENT)

LINE 001

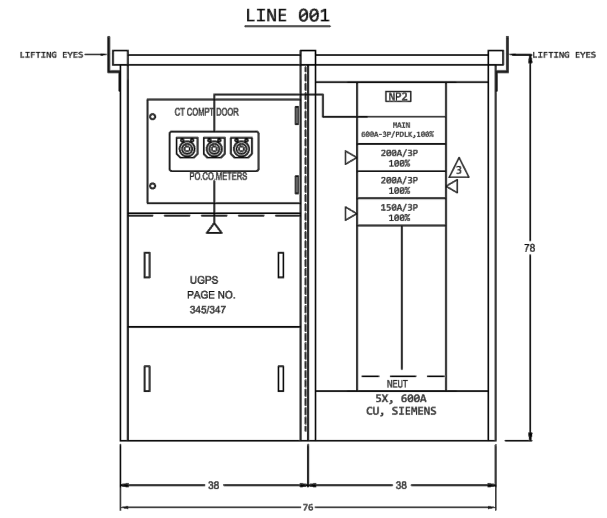

FRONT VIEW SHOWN WITHOUT W/P DOORS

MAIN SWITCHBOARD "EV-CHARGER"
480Y/277V-3ϕ-4W-600A CU
△3 NEMA-3R - S.C.C. = 50KAIC
△2 PAINT: ANSI 61 GREY
APPROX. TOTAL WEIGHT ≈ 1050LBS

NOTES:

1. CERTIFICATION: SHALL BE LISTED AND UL LABELED UNDER UL 891 AS LOW VOLTAGE ENCLOSURE
2. CONSTRUCTION SHALL BE OF CODE GAUGE SHEET STEEL
   A. ENCLOSURE: TYPE 3R
   △2 B. FINISH: ANSI 61 GREY
   C. LIFTING BRACKETS: SHALL BE PROVIDED AND SHIPPED WITH GEAR
3. INCOMING SERVICE:
   A. (480Y/277V-3Ø-4W-60Hz-600A)
   B. SERVING UTILITY: PG&E
   C. SERVICE ENTRANCE RATED: YES
4. BUSSING:
   A. MAIN: 600A SILVER-PLATED COPPER
   B. HARDWARE: MINIMUM GRADE 5 BOLTS WITH SPLIT LOCK WASHERS
   C. NEUTRAL: RATED 100%, BONDED
   D. GROUND: COPPER BUS EXTENDED THE FULL LENGTH OF THE SWITCHBOARD
5. SWITCHBOARD RATINGS:
   A. RATED VOLTAGE: 480Y/277V-3Ø-4W-60Hz-600A
   B. CONTINUOUS CURRENT: 600A
   C. SHORT-CIRCUIT CURRENT: 50kA RMS SYM
6. ACCESS: SWITCHBOARD INTENDED TO BE INSTALLED WITH FRONT ACCESS ONLY
7. POWER CABLES: SEE PLAN VIEW FOR CABLE ENTRY LOCATIONS
8. LUGS: MECHANICAL LUGS SHALL BE PROVIDED
9. NAMEPLATES: PLASTIC INSTALLED WITH SCREWS
10. IT IS RESPONSIBILITY OF OTHERS TO SUBMIT & GAIN APPROVAL FROM LOCAL UTILITY OR A.H.J.
11. NEUTRAL-GROUND BONDING FACTORY INSTALLED & SWITCHBOARD TO BE RATED FOR SERVICE ENTRANCE ONLY
12. PROVIDE DOOR STOPS

⚠DANGER
Arc Flash And Shock Hazard
Appropriate PPE Required
Do not operate controls or open covers without appropriate personal protection equipment. Failure to comply may result in injury or death!
Refer to NFPA 70E for minimum PPE requirements

PG & E REQUIRES ARC FLASH PPE CATEGORY 2 PER NFPA 70E TABLE 130.7(C) (15) (A) (b)

FRONT VIEW

REV.	MM/DD/YYYY	REVISION DESCRIPTION:	INITIALS
0	4/2/2020	SEE REVISION HISTORY TABLE	

DRAWING STATUS: SUBMITTAL
PROJECT: MAIN SWITCHBOARD "EV-CHARGER" FOR PG&E
SOLD TO ADDRESS: CUPERTINO ELECTIC, 1132 N. 7TH STREET, SAN JOSE, CA. 95112
SHIP TO ADDRESS: PG&E EVCN, 555 COUNTY CENTER, REDWOOD CITY, CA. 94063

IEM™
48205 WARM SPRINGS BLVD.
FREMONT, CA 94539
(510) 656-1600

ENGINEER:	FERRA HAYES
DRAWN BY:	FERRA HAYES
CHECKED BY:	HARISH RAGHAVAN
P.O. #:	7172473/1912214100
IEM ID #:	13
JOB (CO) #:	114261
L.I. #:	1
LOCATION:	FREMONT
SHEET:	1_FV_01
PAGE	01 **OF** 02

LAST SAVED: 4/21/20 4:07PM BY: FERRA.HAYES LAST PLOT: 4/21/20 4:07PM FILE: C:\IEM-R\PROJECT\114000\114261 PG&E EVCN 555 COUNTY CENTER\DRAWINGS\114261-1_R3.DWG

THE CONTROLLED COPY OF THIS DOCUMENT RESIDES IN THE IEM NETWORK. PRINTED COPIES ARE UNCONTROLLED.

IEM 600A REFERENCE DRAWINGS | NO SCALE | 2

AIC LETTER | NO SCALE | 3

PG&E®

PACIFIC GAS AND ELECTRIC COMPANY
P.O. BOX 997300
SACRAMENTO, CA 95899-7300

CUPERTINO ELECTRIC
1132 NORTH 7TH STREET
SAN JOSE, CA 95112
(408)808-8000
C-10 LIC.NO. 174637

CONSULTANT

Blair, Church & Flynn
CONSULTING ENGINEERS

Blair, Church & Flynn
Consulting Engineers
451 Clovis Avenue,
Suite 200
Clovis, California 93612
Tel (559) 326-1400
Fax (559) 326-1500

PROJECT NO:	19-1-22141-00
DRAWN BY:	ERIK OROZCO
CHECKED BY:	ROBERT FRANCIS

REV	DATE	DESCRIPTION
0	04/27/2020	ISSUED FOR 100% REVIEW

NOT TO BE USED FOR CONSTRUCTION

IT IS A VIOLATION OF LAW FOR ANY PERSON, UNLESS THEY ARE ACTING UNDER THE DIRECTION OF A LICENSED PROFESSIONAL ENGINEER, TO ALTER THIS DOCUMENT.

PG&E ACCEPTANCE STAMP

PG&E PROJECT # 31471119
COUNTY OF SAN MATEO
555 COUNTY CENTER,
REDWOOD CITY, CA 94063

SHEET TITLE
REFERENCE DRAWINGS

SHEET NUMBER
R1.0

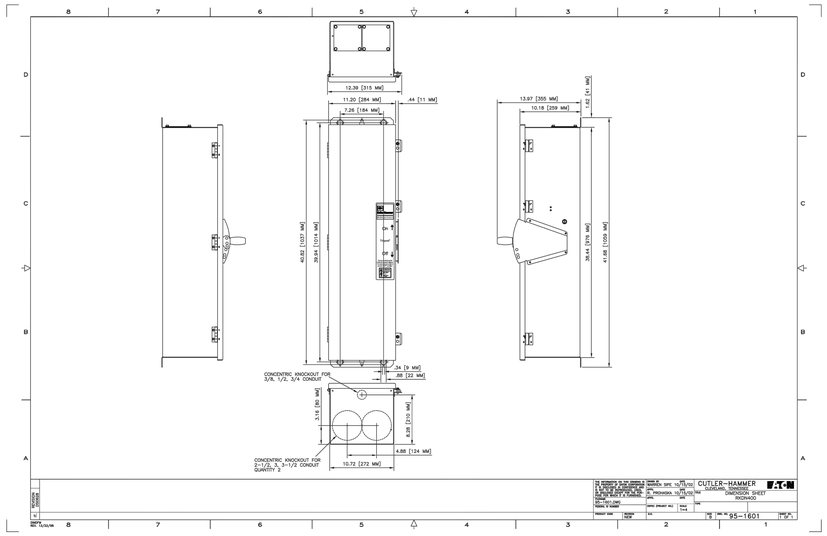

200A ENCLOSED SAFETY BREAKER

NO SCALE | 1

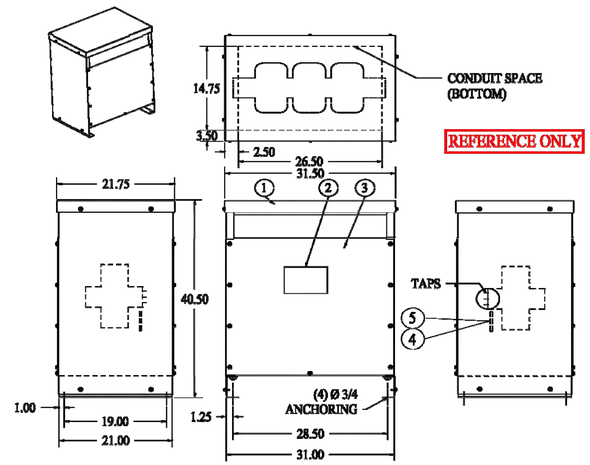

Parts List		
ITEM	QTY	DESCRIPTION
1	1	TOP COVER - REMOVABLE
2	1	DIAGRAMATIC NAMEPLATE
3	2	FRONT & REAR PANEL - REMOVABLE
4	3	HV TERMINAL
5	4	LV TERMINAL

U.S. DEPARTMENT OF ENERGY
DOE 2016 COMPLIANT

HT112A3B2-D16

S.O. NO:
DWG FOR: ☐ RECORD ☐ APPROVAL ☑ QUOTE

CUST/JOB NAME:
CUST ORDER NO:
SERIAL NO:
ID TAG:

KVA: 112.5
HIGH VOLTAGE: 480D
LOW VOLTAGE: 208Y/120
HV TAPS: 2A4B 2-1/2%
HV-KV BIL: 10
LV-KV BIL: 10
PHASE: ☐ SINGLE ☑ THREE
FREQ-HZ: ☑ 60 ☐ 50
TEMP RISE - °C: ☑ 150 ☐ 115 ☐ 80
COOLING CLASS: AA
WINDING COND: ☑ ALUMINUM ☐ COPPER
PAINT/COATING: ANSI 61 LIGHT GRAY
APPRX WT - LBS:800

☐ STANDAR ☑ DOE2016 ☐ K4 ☐ K13 ☐ K20

NOTES:
1) THIS DRAWING IS NOT FOR CONSTRUCTION PURPOSES. VERIFY WITH FACTORY BEFORE CONSTRUCTION.
2) TRANSFORMERS ARE MANUFACTURED AND TESTED PER APPLICABLE ANSI, NEMA, AND IEEE STANDARDS.
3) UNLESS OTHERWISE SPECIFIED ALL DIMENSIONS ARE IN INCHES WITH ± ¼" TOLERANCE.
4) TRANSFORMER IS UL & CSA LISTED AND LABLED.
5) UNIT IS DESIGNED FOR INDOOR (NEMA1) AND OUTDOOR (NEMA3R) APPLICATION.

		SCALE : N/A	PAGE 1 OF 1
		CADD:	
		CHKD:	
REVISIONS		APPD:	

3PH, 600V GENERAL PURPOSE DRY TYPE TRANSFORMER OUTLINE, CASE C (CASE 4)

MGM TRANSFORMER CO.
CITY OF COMMERCE, CALIFORNIA
TEL: (323) 726-0888, FAX: (323) 726-8192

CAD NO. | REV:

112.5kVA STEPDOWN TRANSFORMER

NO SCALE | 2

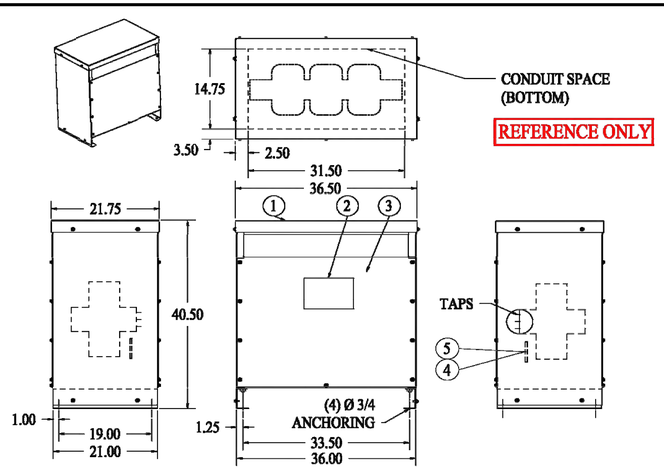

Parts List		
ITEM	QTY	DESCRIPTION
1	1	TOP COVER - REMOVABLE
2	1	DIAGRAMATIC NAMEPLATE
3	2	FRONT & REAR PANEL - REMOVABLE
4	3	HV TERMINAL
5	4	LV TERMINAL

U.S. DEPARTMENT OF ENERGY
DOE 2016 COMPLIANT

HT150A3B2-D16

S.O. NO:
DWG FOR: ☐ RECORD ☐ APPROVAL ☑ QUOTE

CUST/JOB NAME:
CUST ORDER NO:
SERIAL NO:
ID TAG:

KVA: 150
HIGH VOLTAGE: 480D
LOW VOLTAGE: 208Y/120
HV TAPS: 2A4B 2-1/2 %
HV-KV BIL: 10
LV-KV BIL: 10
PHASE: ☐ SINGLE ☑ THREE
FREQ-HZ: ☑ 60 ☐ 50
TEMP RISE - °C: ☑ 150 ☐ 115 ☐ 80
COOLING CLASS: AA
WINDING COND: ☑ ALUMINUM ☐ COPPER
PAINT/COATING: ANSI 61 LIGHT GRAY
APPRX WT - LBS: 1000

☐ STANDARD ☑ DOE2016 ☐ K4 ☐ K13 ☐ K20

NOTES:
1) THIS DRAWING IS NOT FOR CONSTRUCTION PURPOSES. VERIFY WITH FACTORY BEFORE CONSTRUCTION.
2) TRANSFORMERS ARE MANUFACTURED AND TESTED PER APPLICABLE ANSI, NEMA, AND IEEE STANDARDS.
3) UNLESS OTHERWISE SPECIFIED ALL DIMENSIONS ARE IN INCHES WITH ± ¼" TOLERANCE.
4) TRANSFORMER IS UL & CSA LISTED AND LABLED.
5) UNIT IS DESIGNED FOR INDOOR (NEMA1) AND OUTDOOR (NEMA3R) APPLICATION.

		SCALE : N/A	PAGE 1 OF 1
		CADD:	
		CHKD:	
REVISIONS		APPD:	

3PH, 600V GENERAL PURPOSE DRY TYPE TRANSFORMER OUTLINE, CASE C+ (CASE 5)

MGM TRANSFORMER CO.
CITY OF COMMERCE, CALIFORNIA
TEL: (323) 726-0888, FAX: (323) 726-8192

CAD NO. | REV:

150kVA STEPDOWN TRANSFORMER

NO SCALE | 3

IEM™ INDUSTRIAL ELECTRIC MFG

SALESMAN NO.	SALES ORDER NO.	JOB NAME	
13	114261	PG&E EVCN 555 COUNTY CENTER	
CUSTOMER NAME			P.O. NO.
CUPERTINO ELECTRIC (TAXA			7172473/1912214100

Line Item # 9 Can
Line Item # 10 Int Cat # IEM-4PIU48-400CU Siemens Breakers

Service: 120/208V 3P4W Bottom Feed 400 A CU Bus
Max Available S.C.C. (Sym. RMS): 50 KAIC
Ground: Copper Bus, cable size #14 to 1/0 AWG

Stud Dimensions: 10 x 51 Directory: (Metal 6x8 assumed) Screw-on Nameplates
D/F Opening: 8 x 50 Can Color: Std ANSI #61 Lt Grey

Prepared By JASONT Date 04/15/20

Neutral	1 NA-600-ES 1 4-600 MCM or 2 1/0-250 MCM	Small Kit

1	BQD240		BQD240		2
3		* 2P *		* 2P *	4
5	BQD240		BQD240		6
7		* 2P *		* 2P *	8
9	BQD240		BQD240		10
11		* 2P *		* 2P *	12
13	BQD240		BQD240		14
15		* 2P *		* 2P *	16
17	BQD240		BQD240		18
19		* 2P *		* 2P *	20
21	BQD240		BQD240		22
23		* 2P *		* 2P *	24
25	BQD240		BQD240		26
27		* 2P *		* 2P *	28
29	BQD240		BQD240		30
31		* 2P *		* 2P *	32
33	BQD240		BQD240		34
35		* 2P *		* 2P *	36
37	BQD240		BQD240		38
39		* 2P *		* 2P *	40
41	BQD240		SPC(Max 110 Amps)		42
43		* 2P *	SPC(Max 110 Amps)		44
45	SPC(Max Combined 150 Amps)		SPC(Max Combined 150 Amps)		46
47	SPC(Max Combined 150 Amps)		SPC(Max Combined 150 Amps)		48

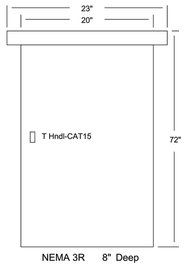

MCB	=JXD63B400H	Large Kit

11/21/17
107958.0

U.L. Listed per UL50 & UL67
Submittals For Can: 9
13 - 114261 Interior: 10
Sheet ___ of ___

IEM 400A DISTRIBUTION PANEL

NO SCALE | 4

PG&E

PACIFIC GAS AND ELECTRIC COMPANY
P.O. BOX 997300
SACRAMENTO, CA 95899-7300

CUPERTINO ELECTRIC
1132 NORTH 7TH STREET
SAN JOSE, CA 95112
(408)808-8000
C-10 LIC.NO. 174637

CONSULTANT
Blair, Church & Flynn
CONSULTING ENGINEERS
Blair, Church & Flynn
Consulting Engineers
450 E. Clovis Avenue,
Suite 200
Clovis, California 93612
Tel (559) 326-1400
Fax (559) 326-1500

PROJECT NO:	19-1-22141-00
DRAWN BY:	ERIK OROZCO
CHECKED BY:	ROBERT FRANCIS

REV	DATE	DESCRIPTION
0	04/27/2020	ISSUED FOR 100% REVIEW

NOT TO BE USED FOR CONSTRUCTION

IT IS A VIOLATION OF LAW FOR ANY PERSON, UNLESS THEY ARE ACTING UNDER THE DIRECTION OF A LICENSED PROFESSIONAL ENGINEER, TO ALTER THIS DOCUMENT.

PG&E ACCEPTANCE STAMP

PG&E PROJECT # 31471119
COUNTY OF SAN MATEO
555 COUNTY CENTER,
REDWOOD CITY, CA 94063

SHEET TITLE
REFERENCE DRAWINGS

SHEET NUMBER
R1.1

STATE OF CALIFORNIA
Electrical Power Distribution
NRCC-ELC-E (Created 11/19) — CALIFORNIA ENERGY COMMISSION

CERTIFICATE OF COMPLIANCE		NRCC-ELC-E
Project Name: COUNTY OF SAN MATEO	Report Page:	Page 1 of 5
Project Address: 555 COUNTY CENTER, REDWOOD CITY, CA 94063	Date Prepared:	03/31/20

This document is used to demonstrate compliance with mandatory requirements in §130.5 for electrical systems in newly constructed nonresidential, high-rise residential and hotel/motel occupancies. Additions and alterations to electrical service systems in these occupancies will also use this document to demonstrate compliance per §141.0(a) or §141.0(b)2P for alterations.

A. GENERAL INFORMATION

01	Project Location (city)	REDWOOD CITY	02	Occupancy Types Within Project:

☐ Office ☐ Retail ☐ Warehouse ☐ Hotel/ Motel ☐ School ☐ Support Areas
☑ Parking Garage ☐ High-Rise Residential ☐ Relocatable ☐ Healthcare Facilities ☐ Other (Write In):

B. PROJECT SCOPE

Table Instructions: Include any electrical service systems that are within the scope of the permit application.

01	02	03	04	05	06
Electrical Service Designation/ Description	Scope of Work[1]	Rating (kVA)	Utility Provided Metering System Exception to §130.5(a)[2]	System subject to CA Elec Code Article 517 Exception to §130.5(a)&(b)	Demand Response Controls
PANEL "A"	New electrical service equipment & meter	498	☑	☐	Where required, demand response controls must be specified which are capable of receiving and automatically responding to at least one standards based messaging protocol which enables demand response after receiving a demand response signal. Sections §120.2, §130.1 and §130.3 and compliance documents NRCC-MCH, NRCC-LTI and NRCC-LTS will indicate when demand response controls are required.

[1] *FOOTNOTES: Adding only new feeders and branch circuits triggers Voltage Drop 130.5(c), no other requirements from 130.5 are required.*
[2] *Applicable if the utility company is providing a metering system that indicates instantaneous kW demand and kWh for a utility-defined period.*

C. COMPLIANCE RESULTS

Table Instructions: If this table says "DOES NOT COMPLY" refer to Table D. for guidance and review the Table that indicates "No".

01		02		03		04	05
Service Electrical Metering §130.5(a)	AND	Separation for Monitoring §130.5(b)	AND	Voltage Drop §130.5(c)	AND	Controlled Receptacles §130.5(d)	Compliance Results
(See Table F)		(See Table G)		(See Table H)		(See Table I)	
	AND	Yes	AND	Yes	AND	Yes	COMPLIES with Exceptional Conditions

STATE OF CALIFORNIA
Electrical Power Distribution
NRCC-ELC-E (Created 11/19) — CALIFORNIA ENERGY COMMISSION

CERTIFICATE OF COMPLIANCE		NRCC-ELC-E
Project Name: COUNTY OF SAN MATEO	Report Page:	Page 2 of 5
Project Address: 555 COUNTY CENTER, REDWOOD CITY, CA 94063	Date Prepared:	03/31/20

D. EXCEPTIONAL CONDITIONS

This table is auto-filled with uneditable comments because of selections made or data entered in tables throughout the form.

Table B indicates the project is exempt from §130.5(a) Service Electrical Metering requirements because the utility company has provided the project a metering system that indicates instantaneous kW demand and kWh for a utility-definied period.

E. ADDITIONAL REMARKS

This table includes remarks made by the permit applicant to the Authority Having Jurisdiction.

F. SERVICE ELECTRICAL METERING

This Section Does Not Apply

G. SEPARATION OF ELECTRICAL CIRCUITS FOR ENERGY MONITORING

Table Instructions: Complete this table for entirely new or complete replacement electrical power distribution systems to demonstrate compliance with §130.5(b). Using the dropdown choices in column 01, indicate the load types included for each service. Any load types that are not included in the service do not need to be shown.

Electrical Service Designation/Description: **PANEL "A"**

01	02	03	04	05	
Load Type per Table 130.5-B[1]	Minimum Required Separation of Load per Table 130.5-B	Compliance Method[2]	Location of Requirements in Construction Documents	Field Inspector	
				Pass	Fail
Charging stations for electric vehicles	All loads in aggregate	Method 1	E1.4	☐	☐

** NOTES: If "Other*" is selected under Compliance Method above, please indicate how compliance has been achieved in the space provided below.*

[1] *FOOTNOTES: For each separate load type, up to 10% of the connected load may be of any type.*
[2] *Method 1: Switchboards/ motor control centers/ panelboard loads disaggregated for each load type*
Method 2: Switchboards/ motor control centers/ panelboard supply other distribution equipment with loads disaggregated for each load type
Method 3: Branch circuits serve load types individually & provisions for adding future branch curcuit monitoring
Method 4: Complete metering system measures and reports loads by type
See Chapter 8 of the Nonresidential Compliance Manual for more detail on Compliance Methods.

H. VOLTAGE DROP

STATE OF CALIFORNIA
Electrical Power Distribution
NRCC-ELC-E (Created 11/19) — CALIFORNIA ENERGY COMMISSION

CERTIFICATE OF COMPLIANCE		NRCC-ELC-E
Project Name: COUNTY OF SAN MATEO	Report Page:	Page 3 of 5
Project Address: 555 COUNTY CENTER, REDWOOD CITY, CA 94063	Date Prepared:	03/31/20

Table Instructions: Please complete this table for entirely new or complete replacement electrical power distribution systems, or alterations that add, modify or replace both feeders and branch circuits to demonstrate compliance with §130.5(c). For alterations, only the altered circuits must demonstrate compliance per §141.0(b)2P(ii).

01	02		03	04	05	
Electrical Service Designation/ Description	Combined Voltage Drop on Installed Feeder/Branch Circuit Conductors Compliance Method		Location of Voltage Drop Calculations[1]	Sheet Number for Voltage Drop Calculations in Construction Documents	Field Inspector	
					Pass	Fail
CT Meter and Main Switchboard	☑ Voltage drop < 5%	Permitted by CA Elec Code (Exception to §130.5(c))* ☐	In construction documents	R2.0	☐	☐

**NOTES if "Permitted by CA Elec Code*" is selected under Compliance Method above, please indicate where the exception applies in the space provided below.*
[1] *FOOTNOTES: Voltage drop calculations may be attached to the permit application outside the construction documents if allowed by the Authority Having Jurisdiction. Select "attached" if applicable. If calculations will be the responsibility of the installing contractor, select "Contractor Responsible".*

I. CIRCUIT CONTROLS FOR 120-VOLT RECEPTACLES AND CONTROLLED RECEPTACLES

Table Instructions: Please complete this table for entirely new or complete replacement electrical power distribution systems to demonstrate compliance with §130.5(d). Both controlled and uncontrolled receptacles must be provided in office areas, lobbies, conference rooms, kitchen areas in office spaces, copy rooms and hotel/motel guest rooms.

01	02	03	04	05	06	
Room Name or Description	Location/ Type of Controlled Receptacles	Shut-Off Controls	Permanent Durable Marking Will be Used	Location of Requirements in Construction Documents	Field Inspector	
					Pass	Fail
-	NA: No applicable space types on this service		☐		☐	☐

Add Row — Remove Last

** If "Other*" is selected under Compliance Method above, please indicate how compliance has been achieved in the space provided below.*

J. DECLARATION OF REQUIRED CERTIFICATES OF INSTALLATION

Table Instructions: Selections have been made based on information provided in previous tables of this document. If any selection needs to be changed, please explain why in Table E. Additional Remarks. These documents must be provided to the building inspector during construction and can be found online at https://ww2.energy.ca.gov/title24/2019standards/2019_compliance_documents/Nonresidential_Documents/NRCI/

YES	NO	Form/Title	Field Inspector	
			Pass	Fail
◉	○	NRCI-ELC-01-E - Must be submitted for all buildings.	☐	☐

STATE OF CALIFORNIA
Electrical Power Distribution
NRCC-ELC-E (Created 11/19) — CALIFORNIA ENERGY COMMISSION

CERTIFICATE OF COMPLIANCE		NRCC-ELC-E
Project Name: COUNTY OF SAN MATEO	Report Page:	Page 4 of 5
Project Address: 555 COUNTY CENTER, REDWOOD CITY, CA 94063	Date Prepared:	03/31/20

K. DECLARATION OF REQUIRED CERTIFICATES OF ACCEPTANCE

There are no Certificates of Acceptance applicable to electrical power distribution requirements.

STATE OF CALIFORNIA
Electrical Power Distribution
NRCC-ELC-E (Created 11/19) — CALIFORNIA ENERGY COMMISSION

CERTIFICATE OF COMPLIANCE		NRCC-ELC-E
Project Name: COUNTY OF SAN MATEO	Report Page:	Page 5 of 5
Project Address: 555 COUNTY CENTER, REDWOOD CITY, CA 94063	Date Prepared:	03/31/20

DOCUMENTATION AUTHOR'S DECLARATION STATEMENT

I certify that this Certificate of Compliance documentation is accurate and complete.

Documentation Author Name:	Brian Duffy	Documentation Author Signature:	
Company:	Blair, Church, and Flynn	Signature Date:	03/31/2020
Address:	451 Clovis Ave., Suite 200, Clovis, CA 93612	CEA/ HERS Certification Identification (if applicable):	
City/State/Zip:	Clovis/CA/93612	Phone:	559-326-1400

RESPONSIBLE PERSON'S DECLARATION STATEMENT
I certify the following under penalty of perjury, under the laws of the State of California:
1. The information provided on this Certificate of Compliance is true and correct.
2. I am eligible under Division 3 of the Business and Professions Code to accept responsibility for the building design or system design identified on this Certificate of Compliance (responsible designer)
3. The energy features and performance specifications, materials, components, and manufactured devices for the building design or system design identified on this Certificate of Compliance conform to the requirements of Title 24, Part 1 and Part 6 of the California Code of Regulations.
4. The building design features or system design features identified on this Certificate of Compliance are consistent with the information provided on other applicable compliance documents, worksheets, calculations, plans and specifications submitted to the enforcement agency for approval with this building permit application.
5. I will ensure that a completed signed copy of this Certificate of Compliance shall be made available with the building permit(s) issued for the building, and made available to the enforcement agency for all applicable inspections. I understand that a completed signed copy of this Certificate of Compliance is required to be included with the documentation the builder provides to the building owner at occupancy.

Responsible Designer Name:	Brian Duffy	Responsible Designer Signature:	
Company :	Blair, Church, and Flynn	Date Signed:	03/31/2020
Address:	451 Clovis Ave., Suite 200, Clovis, CA 93612	License:	E22220
City/State/Zip:	Clovis/CA/93612	Phone:	559-326-1400

Voltage Drop for Wire Runs

Wire Run	Wire Size	Length	Vdrop	Average Vdrop	Max Vdrop
EV-1/EV-2	#6	44	0.56%	1.35%	2.17%
EV-3/EV-4	#6	39	0.50%		
EV-5/EV-6	#6	56	0.72%		
EV-7/EV-8	#6	73	0.93%		
EV-9/EV-10	#6	90	1.15%		
EV-11/EV-12	#6	108	1.38%		
EV-13/EV-14	#6	125	1.60%		
EV-15/EV-16	#6	150	1.92%		
EV-17/EV-18	#6	80	1.02%		
EV-19/EV-20	#6	63	0.81%		
EV-21/EV-22	#6	47	0.60%		
EV-23/EV-24	#6	65	0.83%		
EV-25/EV-26	#6	82	1.05%		
EV-27/EV-28	#6	99	1.27%		
EV-29/EV-30	#6	117	1.50%		
EV-31/EV-32	#6	134	1.71%		
EV-33/EV-34	#6	151	1.93%		
EV-35/EV-36	#6	170	2.17%		
EV-37/EV-38	#4	187	1.56%		
EV-39	#4	209	1.74%		
EV-40/EV-41	#6	73	0.93%		
EV-42	#6	61	0.78%		
EV-43/EV-44	#6	44	0.56%		
EV-45/EV-46	#6	61	0.78%		
EV-47/EV-48	#6	78	1.00%		
EV-49/EV-50	#6	95	1.21%		
EV-51/EV-52	#6	112	1.43%		
EV-53/EV-54	#6	130	1.66%		
EV-55/EV-56	#6	147	1.88%		
EV-57/EV-58	#6	169	2.16%		
EV-59/EV-60	#4	186	1.55%		
TO CKT BKR B	#3/0	127	0.60%		
TO XFMR B	#3/0	26	0.40%		
TO PANEL B	#3/0	26	0.30%		
TO CKT BKR C	#3/0	148	0.70%		
TO XFMR C	#3/0	26	0.40%		
TO PANEL C	#3/0	26	0.30%		
TO CKR BKR D	#3/0	169	0.80%		
TO XFMR D	#3/0	26	0.40%		
TO PANEL D	#3/0	26	0.30%		

PACIFIC GAS AND ELECTRIC COMPANY
P.O. BOX 997300
SACRAMENTO, CA 95899-7300

CUPERTINO ELECTRIC
1132 NORTH 7TH STREET
SAN JOSE, CA 95112
(408)808-8000
C-10 LIC.NO. 174637

CONSULTANT
Blair, Church & Flynn Consulting Engineers
451 Clovis Avenue, Suite 200
Clovis, California 93612
Tel (559) 326-1400
Fax (559) 326-1500

PROJECT NO:	19-1-22141-00
DRAWN BY:	ERIK OROZCO
CHECKED BY:	ROBERT FRANCIS

REV	DATE	DESCRIPTION
0	04/27/2020	ISSUED FOR 100% REVIEW

NOT TO BE USED FOR CONSTRUCTION
REGISTERED PROFESSIONAL ENGINEER BRIAN M. DUFFY No. E22220 ELECTRICAL STATE OF CALIFORNIA
Date Signed:

IT IS A VIOLATION OF LAW FOR ANY PERSON, UNLESS THEY ARE ACTING UNDER THE DIRECTION OF A LICENSED PROFESSIONAL ENGINEER, TO ALTER THIS DOCUMENT.

PG&E ACCEPTANCE STAMP

PG&E PROJECT # 31471119
COUNTY OF SAN MATEO
555 COUNTY CENTER,
REDWOOD CITY, CA 94063

SHEET TITLE
TITLE 24 DOCUMENT

SHEET NUMBER
R2.0