OFFICE LEASE

between

CITY OF DALY CITY,
as Landlord

and

COUNTY OF SAN MATEO,
as Tenant

For the lease of
350 90th Street, Suite 200
Daly City, California

October 31, 2017

OFFICE LEASE

Table of Contents

1. BASIC LEASE INFORMATION 1

2. PREMISES 4
   2.1. Lease Premises 4
   2.2. Common Areas 4
   2.3. Parking 4

3. TERM 4
   3.1. Term of Lease 4
   3.2. Effective Date, Commencement Date, Rent Commencement Date and Expiration Date 4
   3.3. Delay in Delivery of Possession 4
   3.4. Extension Option 5
   3.5. Determination of Base Rent for the Extended Term 5

4. RENT 5
   4.1. Base Rent 5
   4.2. Adjustments in Base Rent 5

5. USE 6
   5.1. Permitted Use 6
   5.2. Observance of Rules and Regulations 6
   5.3. Interference with Access 6

6. IMPROVEMENTS 6
   6.1. Landlord's Obligation to Construct Base Building Improvements 6
   6.2. Leasehold Improvements 7
   6.3. Installation of Telecommunications and Other Equipment 7

7. ALTERATIONS 7
   7.1. Alterations by County 7
   7.2. Title to Improvements 7
   7.3. County's Personal Property 7
   7.4. Alteration by Landlord 8

8. REPAIRS AND MAINTENANCE 8
   8.1. Landlord's Repairs 8
   8.2. County's Repairs 8
   8.3. Liens 8

9. UTILITIES AND SERVICES 9
   9.1. Landlord's Provision of Utilities 9
   9.2. Services 9
   9.3. Conservation 9
   9.4. Disruption in Essential Utilities or Services 9

10. COMPLIANCE WITH LAWS; PREMISES CONDITION 9
   10.1. Premises Condition and Landlord's Compliance with Laws; 9

10.2. County's Compliance with Laws 10
10.3. County's Compliance with Insurance Requirements 10

11. SUBORDINATION 10

12. DAMAGE AND DESTRUCTION 11

13. EMINENT DOMAIN 11
13.1. Definitions 11
13.2. General 12
13.3. Total Taking; Automatic Termination 12
13.4. Partial Taking; Election to Terminate 12
13.5. Rent; Award 12
13.6. Partial Taking; Continuation of Lease 12
13.7. Temporary Taking 13

14. ASSIGNMENT AND SUBLETTING 13

15. DEFAULT; REMEDIES 13
15.1. Events of Default by County 13
15.2. Landlord's Remedies 14
15.3. Landlord's Default 14

16. INDEMNITIES 14
16.1. County's Indemnity 14
16.2. Landlord's Indemnity 15
16.3. Concurrent Negligence 15

17. INSURANCE 15
17.1. County's Self-Insurance 15
17.2. Landlord's Self-Insurance 15
17.3. Waiver of Subrogation 15

18. ACCESS BY LANDLORD 16

19. ESTOPPEL CERTIFICATES 16

20. SURRENDER OF PREMISES 16

21. HAZARDOUS MATERIALS 16
21.1. Definitions 16
21.2. Landlord's Representations and Covenants 17
21.3. Landlord's Environmental Indemnity 17
21.4. County's Covenants 17
21.5. County's Environmental Indemnity 17

22. SPECIAL PROVISIONS 17

23. GENERAL PROVISIONS 17
23.1. Notices 17
23.2. No Implied Waiver 18
23.3. Amendments 18
23.4. Authority 18
23.5. Parties and Their Agents; Approvals 18

23.6. Interpretation of Lease 19
23.7. Successors and Assigns 19
23.8. Brokers 19
23.9. Severability 19
23.10. Governing Law 19
23.11. Entire Agreement 19
23.12. Holding Over 20
23.13. Cumulative Remedies 20
23.14. Time of Essence 20
23.15. Survival of Indemnities 20
23.16. Signs 20
23.17. Quiet Enjoyment and Title 20
23.18. Bankruptcy 20
23.19. Transfer of Landlord's Interest 21
23.20. Non-Liability of County Officials, Employees and Agents 21
23.21. Counterparts 21
23.22. Certification by Landlord 21
23.23. Acceptance of Lease by Landlord 21

LIST OF EXHIBITS:

EXHIBIT A-1 -- Site Plan of the Property
EXHIBIT A-2 -- Floor Plan of Premises
EXHIBIT A-3 – Leasehold Improvements
EXHIBIT A-4 – Landlord Improvements
EXHIBIT B -- Notice of Rent Commencement Date
EXHIBIT C – Rules & Regulations

OFFICE LEASE
Lease No. 1326

THIS OFFICE LEASE (this "Lease"), dated for reference purposes only as of October 31, 2017 is by and between the CITY OF DALY CITY ("Landlord"), and the COUNTY OF SAN MATEO, a political subdivision of the State of California ("County" or "Tenant").

Landlord and County hereby agree as follows:

1. BASIC LEASE INFORMATION

The following is a summary of basic lease information (the "Basic Lease Information"). Each item below shall be deemed to incorporate all of the terms in this Lease pertaining to such item. In the event of any conflict between the information in this Section and any more specific provision of this Lease, the more specific provision shall control.

1.1	Lease Reference Date:	October 31, 2017
1.2	Landlord:	CITY OF DALY CITY
1.3	Tenant:	COUNTY OF SAN MATEO
1.4	Property and Building (Section 2.1):	The property is comprised of San Mateo County Assessor's Parcel Numbers 006-201-480 and 006-201-440, together with the improvements thereon (the "Property"). The three story office building located on the Property is commonly known as 350 90th Street, Daly City, CA (the "Building"). The Property and the Building are shown on the attached Exhibit A-1 (Site Plan of Property).
1.5	Premises (Section 2.1):	The premises consist of a portion of the Building, commonly known as Suite 200, comprised of approximately 7,631 rentable square feet of office area (the "Premises"), and is particularly shown on the attached Exhibit A-2, together with the parking and common areas of the Building and the Property.
1.6	Parking (Section 2.3)	County shall have the non-exclusive right to use the parking facility of the Property in common with other tenants of the Building and the Property, provided that County agrees not to use in excess of its proportionate share of the parking facility as set forth in Section 2.3.
1.7	Rentable Area of Premises (Section 2.1):	Approximately 7,631 rentable square feet.

1.8	Term (Section 3):	The Effective Date shall be as set forth in Section 3.2 hereof. Estimated Commencement Date: December 1, 2017 Expiration Date: 60 months after Rent Commencement Date
1.9	Extension Option (Section 3.4):	One additional term of 5 years, exercisable by County by written notice to Landlord given not less than 9 months or greater than 12 months in advance, with rent determined as set forth in Section 3.5 hereof. Tenant shall have the option to terminate the Lease at any time during the term of the Option, at will and without cause by giving written notice to the Landlord at least 12 months in advance.
1.10	Adjustment Dates (Section 4.2):	12 months after the Rent Commencement Date and every 12 months thereafter throughout the Term of the Lease.
1.11	Base Rent (Section 4.1):	Monthly Base Rent of $16,025.10, subject to adjustment as set forth in Section 4.2 hereof.
1.12	Rent Adjustment (Section 4.2):	On each Adjustment Date, the Base Rent for the following twelve-month period shall be adjusted to equal 103% of the Base Rent for the lease year preceding such Adjustment Date.
1.13	County's Percentage Share:	County's percentage share of the Building and Property shall be 33%.
1.14	Use (Section 5.1):	The Premises shall be used for general office and health services purposes, including but not limited to mental health counseling services, and such other functions and programs that the County and Landlord may deem appropriate, provided that no such use shall unreasonably interfere with Landlord's ability to lease portions of the Property to other tenants or interferes with another tenant that operates youth services. Law enforcement use shall not be allowed.
1.15	Improvements (Section 6)	Landlord shall make the improvements necessary to the Premises, Building, and Property to meet all ADA, Life Safety and other building codes, and to ensure that the building systems are adequate to provide quality heating, ventilation and air-conditioning to the Premises. Landlord does not warrant that the current improvements meet today's Title 24 standards. Landlord will be responsible to bring property to compliance if it is triggered by Landlord's work.

1.16	Utilities (Section 9.1):	Landlord, at its sole cost and expense, shall provide all utilities, except telephone and computer services to the Premises.
1.17	Services (Section 9.2):	Landlord shall not be responsible for janitorial services.
1.18	Other Noteworthy Provisions (Section 22)	None
1.19	Notice Address of Landlord (Section 23.1):	City of Daly City 333 90th Street Daly City, CA 94015-1895
1.20	Key Contact for Landlord:	Patricia E. Martel City Manager City of Daly City 333 90th Street Daly City, CA 94015-1895
	Landlord Contact Telephone No.:	(650) 991-8127
1.21	Notice Address for County (Section 23.1):	Assistant County Manager 400 County Center Redwood City, CA 94063 Fax No.: (650) 363-4832
1.22	and to:	Not Used
1.23	Key Contact for County:	Real Property Services Manager 555 County Center, 4th Floor Redwood City, CA 94063
	County Contact Telephone No.:	(650) 363-4047
1.24	Broker (Section 23.8)	Cushman & Wakefield

2. PREMISES

2.1. Lease Premises

Landlord leases to County and County leases from Landlord, subject to the provisions of this Lease, those premises in the building identified in Section 1.4 of the Basic Lease Information (the "Building") and shown on the floor plan attached hereto as Exhibit A-2 (the "Premises"). Landlord and County hereby agree that the Premises contain the rentable area specified in the Basic Lease Information. The Building, land upon which the Building is located and all other improvements on or appurtenances to such land are referred to collectively as the "Property."

2.2. Common Areas

County shall have the non-exclusive right to use, together with other tenants of the Property, the public areas of the Property (the "Common Areas"), and the non-exclusive right of access to and from the Premises by the main entrances to the Building and the Property.

2.3. Parking

County shall have the right to park in the parking facilities of the Property as set forth in Section 1.6 of the Basic Lease Information, and in common with other tenants of the Property, provided that, in the aggregate, County agrees not to use in excess of its proportionate share of parking facilities, which is 2.6 spaces for each 1,000 rentable square feet of the Premises, and agrees to cooperate with Landlord and the other tenants of the Property in the use of the parking facilities.

3. TERM

3.1. Term of Lease

The Premises are leased for an initial term (the "Initial Term") commencing on the date specified in the Basic Lease Information as the estimated commencement date (the "Estimated Commencement Date"), or such later date as the County Board of Supervisors and the City of Daly City authorizes the execution of this Lease. The Initial Term of this Lease shall end on the Expiration Date specified in the Basic Lease Information, or such earlier date on which this Lease terminates pursuant to the provisions of this Lease, provided that County shall have the right to extend the Initial Term pursuant to Section 3.4 (Extension Option), below. The word "Term" as used herein shall refer to the Initial Term and any Extended Terms if County exercises the Extension Option as provided in Sections 1.9 and 3.4.

3.2. Effective Date, Commencement Date, Rent Commencement Date and Expiration Date

The date on which this Lease shall become effective (the "Effective Date") is the date upon which (i) the County Board of Supervisors, in its sole and absolute discretion, adopts a resolution authorizing the execution of this Lease and (ii) this Lease is duly executed by the parties hereto.

The Term of this Lease commences on the Effective Date or the first day of the following month, whichever is later, and the dates on which the Term commences and terminates pursuant hereto are referred to respectively as the "Commencement Date" and the "Expiration Date."

The date on which the County is first obligated to pay Base Rent provided for herein is referred to as the "Rent Commencement Date." The Rent Commencement Date shall be the first day of the month immediately following the four full months after the Landlord issues a Certificate of Occupancy for the Improvements to the Premises, which such issuance shall not be unreasonably denied or delayed, but in any event no later than August 1, 2018. Promptly thereafter Landlord shall deliver to County a notice substantially in the form of Exhibit B attached hereto, confirming the actual Rent Commencement Date, but Landlord's failure to do so shall not affect the date on which the County is first obligated to pay Base Rent.

3.3. Delay in Delivery of Possession

Landlord shall use its best efforts to deliver possession of the Premises in good working condition on or before the Commencement Date. However, if Landlord is unable to deliver possession of the Premises as provided above, then, subject to the provisions of this Section below, the validity of this Lease shall not be affected by such inability to deliver possession. If the Term commences later or earlier than

the Estimated Commencement Date, this Lease shall nevertheless expire on the Expiration Date, unless sooner terminated pursuant to the provisions under this Lease. If Landlord is unable to deliver possession of the Premises to County as required hereunder by February 1, 2018, then County may, at its option, terminate this Lease, without any further liability under this Lease, upon written notice to Landlord. Landlord will allow the County early non-exclusive possession of the premises upon full execution of the lease in order for the County to begin construction of Leasehold Improvements. During the County's early possession, the Landlord's work will be done concurrently.

3.4. Extension Option

County shall have the right to extend the Initial Term of this Lease (the "Extension Option") for the additional term specified in the Basic Lease Information (the "Extended Term"). Such Extension Option shall be on all of the terms and conditions contained in this Lease except that the rent for the Extended Term shall be as set forth in Section 3.5 (Determination of Base Rent for the Extended Term). County, at its sole discretion, may exercise the Extension Option, if at all, by giving written notice to Landlord no later than 9 months and no earlier than 12 months prior to expiration of the term to be extended; provided, however, if County is in material default under this Lease on the date of giving such notice and fails to cure such default as set forth in Section 15.1, Landlord may reject such exercise by delivering written notice thereof to County promptly after such failure to cure.

3.5. Determination of Base Rent for the Extended Term

At the commencement of the Extended Term, the Base Rent shall be adjusted to an amount equal to one hundred three percent (103%) of the Base Rent for the lease year preceding the commencement of the Extended Term.

4. RENT

4.1. Base Rent

Beginning on the Rent Commencement Date, County shall pay to Landlord during the Initial Term the monthly Base Rent specified in Section 1.11 of the Basic Lease Information (the "Base Rent"). The Base Rent shall be payable in equal consecutive monthly payments on or before the first day of each month, in advance, at the address specified for Landlord in Section 1.19 of the Basic Lease Information, or such other place as Landlord may designate in writing upon not less than thirty (30) days' advance notice. County shall pay the Base Rent without any prior demand and without any deductions or setoff except as otherwise expressly provided in this Lease. If the Rent Commencement Date occurs on a day other than the first day of a calendar month or the Expiration Date occurs on a day other than the last day of a calendar month, then the monthly payment of the Base Rent for such fractional month shall be prorated based on a thirty (30) day month.

4.2. Adjustments in Base Rent

On each date specified in Section 1.10 of the Basic Lease Information for the adjustment of Base Rent (an "Adjustment Date"), the Base Rent for the following twelve-month period shall be adjusted to equal one hundred three percent (103%) of the Base Rent for the lease year preceding such Adjustment Date as follows:

Rent Commencement Date-Month 12 of the lease period: $16,025.10

Months 13-24 of the lease period: $16,482.96

Months 25-36 of the lease period: $17,017.13

Months 37-48 of the lease period: $17,474.99

Months 49-60 of the lease period: $18,009.16

If the Tenant exercises their option to extend the lease, the monthly rent shall increase 3% annually.

5. USE

5.1. Permitted Use

The Premises shall be used for general office and health services purposes, including but not limited to mental health counseling services, and such other functions and programs that the County and Landlord may deem appropriate, provided that no such use shall unreasonably interfere with Landlord's ability to lease portions of the Property to other tenants or interferes with another tenant that operates youth services. Law enforcement use shall not be allowed.

5.2. Observance of Rules and Regulations

County shall observe Landlord's reasonable rules and regulations for the Property subject to the provisions of this Lease. County acknowledges and agrees to the current Rules and Regulations, if any. Landlord may make reasonable additions or modifications thereto, which shall be binding upon County within a reasonable implementation period upon Landlord's delivery to County of a copy thereof, provided that such additions or modifications shall not reduce Landlord's obligations hereunder nor interfere with County's business in the Premises, and such additions or modifications apply equitably to the other tenants of the Property, are not in conflict with the provisions of this Lease, do not materially increase the burdens or obligations upon County, do not impose a charge upon County for services which this Lease expressly states are to be provided to County at no charge, and do not materially adversely affect the conduct of any business in the Premises which County is permitted to conduct pursuant to Section 5.1 hereof. Landlord shall administer the Rules and Regulations in a fair and nondiscriminatory manner and use reasonable efforts to cause other tenants of the Property to comply with them. County shall be entitled upon request to any waiver or special dispensation granted by Landlord to any other tenant in the Property with respect to the Rules and Regulations, and Landlord shall notify County of any such waiver or special dispensation.

5.3. Interference with Access

Landlord shall provide to County at all times use of the Premises and uninterrupted access thereto to the maximum extent possible, including, without limitation, during any power outages affecting the Premises or any portion of the Property; provided, however, that Landlord may, after consultation with the County Manager or the County Manager's designee, interrupt County's access to the Premises or the Property in the event of an immediate risk of danger to the Premises, the Common Areas or any other portion of the Property being rendered unsafe for human occupancy to the extent that such condition effects the Premises. If County's use of any of the Premises or access thereto is interrupted as a result of the Premises, the Common Areas or any other portion of the Property being rendered unsafe for human occupancy due to Landlord's failure to comply with its obligations under this Lease or for any other reason other than County's default hereunder, then Landlord shall immediately undertake all commercially reasonable steps to correct such condition. In the event such condition continues for five (5) days and materially impairs County's ability to carry on its business in the Premises, the Rent payable hereunder shall be abated based on the extent to which such default interferes with County's ability to carry on its business at the Premises. If any such default by Landlord shall continue for thirty (30) days or more after County's use is interrupted and materially impairs County's ability to carry on its business in the Premises, then County shall have the right, without limiting any of its other rights under this Lease to terminate this Lease, unless Landlord supplies County with evidence reasonably satisfactory to County that County's normal and safe use will be restored within ninety (90) days of the date County's use was interrupted, and such use is actually restored within such 90-day period. Nothing in this Section shall limit County's rights with respect to any disruption due to casualty pursuant to Section 12 (Damage and Destruction) hereof.

6. IMPROVEMENTS

6.1. Landlord's Obligation to Construct Base Building Improvements

Landlord, through its general contractor, shall construct certain improvements, perform the work and make the installations in the Premises and the Common Areas ("Base Building Improvements") at Landlord's sole cost, which cost shall not be subject to reimbursement. The Base Building Improvements shall include, without limitation, (i) any improvements required in order to make the Building, Common Areas, Parking and path of travel compliant with the Americans with Disabilities Act ("ADA"), Life Safety

and other building codes (ii) any improvements necessary to the Premises (e.g. mechanical system, HVAC, roof, and structure) to ensure the building is in good working condition.

6.2. Leasehold Improvements

Before the Commencement Date of this Lease, County has caused its architect or space planner to prepare and submit to Landlord for its approval plans for the Leasehold Improvements, based on County's program requirements for use of the Premises, and in form and detail sufficient for purposes of contractor pricing. Landlord and County hereby approve the plans and specifications dated on or approximately June 20, 2017, prepared by KRJ Design Group, a copy of which is attached hereto as Exhibit A-3 (Leasehold Improvements). County, through its general contractor, shall construct the Leasehold Improvements, perform the work and make the installations in the Premises at County's sole cost. Landlord shall promptly reimburse County for all restroom ADA related Leasehold Improvements, in the form of rental abatement after tenant submits evidence and completion of tenant improvements.

6.3. Installation of Telecommunications and Other Equipment

County shall be responsible for the installation of telecommunications, data and computer cabling facilities and equipment, provided that Landlord shall furnish access to County and its consultants and contractors to the main telephone service serving the Premises and all other parts of the Property for which access is needed for proper installation of all such facilities and equipment including, but not limited to, wiring. County shall have the right to enter the Premises and such other portions of the Property at reasonable times during the course of construction of the Leasehold Improvements in order to install such facilities and equipment. County and Landlord shall use their good faith efforts to coordinate any such activities to allow the Leasehold Improvements and the installation of such facilities and equipment to be completed in a timely and cost-effective manner.

7. ALTERATIONS

7.1. Alterations by County

County shall not make or permit any alterations, installations, additions or improvements (collectively, "Alterations") to the Premises without first obtaining Landlord's written consent, which Landlord shall not unreasonably withhold or delay. However, the installation of furnishings, fixtures, equipment or decorative improvements, none of which affect the Building Systems or structural integrity of the Building and none of which involve the installation or removal of partitions, demising walls, doors or windows, and the repainting and recarpeting of the Premises shall not constitute Alterations requiring Landlord's consent. Any Alterations permitted hereunder shall be made at County's cost in compliance with applicable Laws as defined in Section 10. Landlord shall, without cost to itself, cooperate with County in securing building and other permits and authorizations needed in connection with any permitted Alterations. Landlord shall not be entitled to any construction or other administrative fee in connection with any Alteration. County shall not be required to remove any Alterations upon the expiration or earlier termination of this Lease unless Landlord notifies County in writing at the time Landlord approves such Alterations that they must be removed at the Expiration Date. Any Alterations made by County shall be made by a contractor selected by Tenant and reasonably acceptable to Landlord.

7.2. Title to Improvements

Except for County's Personal Property (as defined in the next Section) all appurtenances, fixtures, improvements, equipment, additions and other property permanently installed in the Premises as of the Rent Commencement Date or during the Term shall be and remain Landlord's property. County may not remove such property unless Landlord consents thereto.

7.3. County's Personal Property

All furniture, furnishings, equipment, trade fixtures and articles of movable personal property installed in the Premises by or for the account of County and that can be removed without structural damage to the Premises (collectively, "County's Personal Property") shall be and remain County's property. At any time during the Term or at the expiration thereof, County may remove any of County's Personal Property provided County shall repair any damage to the Premises resulting therefrom. Upon the expiration or earlier

termination of this Lease, County shall remove County's Personal Property from the Premises in accordance with Section 20 (Surrender of Premises), below. Landlord acknowledges that some of County's Personal Property may be financed by an equipment lease financing otherwise subjected to a security interest, or owned by an equipment company and leased to County. Landlord, upon County's reasonable request, shall execute and deliver any document required by any supplier, lessor, or lender in connection with the installation in the Premises of any items of County's Personal Property, pursuant to which Landlord waives any rights it may have or acquire with respect to County's Personal Property, so long as the supplier, equipment lessor or lender agrees that it (i) will remove the Property from the Premises on or before the Expiration Date (but if it does not remove County's Personal Property within such time it shall have waived any rights it may have had to County's Personal Property), and (ii) will immediately repair any damage caused by the removal of County's Personal Property. Landlord shall recognize the rights of a supplier, lessor or lender who has an interest in any items of County's Personal Property to enter the Premises and remove such property at any time during the Term.

7.4. Alteration by Landlord

Landlord shall use commercially reasonable efforts to minimize interference with or disruption to County's use and occupancy of the Premises during any alterations, installations, additions or improvements to the Building or the Property, including without limitation any leasehold improvement work for other tenants in the Property. Landlord shall promptly remedy any such interference or disruption upon receiving County's notice thereof.

8. REPAIRS AND MAINTENANCE

8.1. Landlord's Repairs

Landlord shall repair and maintain, at its cost and in good condition, the exterior and structural portions of the Building, including, without limitation, the roof, foundation, bearing and exterior walls and subflooring, and the heating, ventilating, air conditioning, plumbing, electrical, fire protection, life safety, security and other mechanical, electrical and communications systems of the Building (collectively, the "Building Systems") and the Common Areas, including, without limitation, the driveways, parking areas, sidewalks and landscaped areas of the Property. Without limiting the foregoing, Landlord shall maintain the Building and the Property in a clean, safe and attractive manner, and shall not knowingly permit to be done in or about the Building or the Property anything that is illegal, is dangerous to persons or property or constitutes a nuisance.

8.2. County's Repairs

Subject to Landlord's warranty under Section 10.1 (Premises Condition and Landlord's Compliance with Laws), any construction warranties or guaranties received in connection with Landlord's completion of the Improvements, and Landlord's repair and maintenance obligations hereunder, County shall repair and maintain at its cost the interior portions of the Premises and shall keep the Premises in good working order and in a safe and sanitary condition, except for ordinary wear and tear and damage by casualty. County shall make any such required repairs and replacements that Landlord specifies in writing (i) at County's cost, (ii) by contractors or mechanics selected by Tenant and reasonably approved by Landlord, (iii) so that same shall be at least substantially equal in quality, value and utility to the original work or installation prior to damage thereof, (iv) in a manner and using equipment and materials that will not materially interfere with or impair the operations, use or occupation of the Building or the Building Systems, and (v) in compliance with all applicable Laws, including, without limitation, any applicable contracting requirements under the Ordinance Code or the Charter of the County of San Mateo. At all times during the Term of the Lease, Landlord shall, upon reasonable notice by County, afford County and its Agents with access to those portions of the Building and the Property which are necessary to maintain or repair the telecommunications and data and computer cabling facilities and equipment installed by County.

8.3. Liens

County shall keep the Premises free from liens arising out of any work performed, material furnished or obligations incurred by County during the Term. Landlord shall have the right to post on the Premises any notices permitted or required by law or that are needed for the protection of Landlord, the

Premises, or the Property, from mechanics' and material suppliers' liens. County shall give Landlord at least ten (10) days' prior written notice of commencement of any repair or construction by County on the Premises.

9. UTILITIES AND SERVICES

9.1. Landlord's Provision of Utilities

Landlord shall furnish the following utilities and services to the Premises: (a) heating, air conditioning and ventilation in amounts required for County's comfortable use and occupancy of the Premises, during the period from 7:00 a.m. to 6:00 p.m., Monday through Friday, except holidays generally recognized in San Mateo County; (b) electric current in amounts required for normal lighting and for the operation of personal computers and other normal office machines and equipment, on a twenty-four (24) hours-a-day, seven-days-a-week basis ("Daily Basis"); and (c) water for lavatory, kitchen and drinking purposes on a Daily Basis. Without limiting Landlord's obligations hereunder, Landlord shall furnish all utilities and services required under this Lease in a manner consistent with such utilities and services normally provided in other buildings in San Mateo County similar to the Building.

9.2. Services

Janitorial Service: Landlord shall not be responsible for janitorial services.

9.3. Conservation

Landlord may establish reasonable measures to conserve energy and water, including automatic light shut off after hours and efficient lighting forms, so long as these measures do not unreasonably interfere with County's use of the Premises.

9.4. Disruption in Essential Utilities or Services

In the event of any failure, stoppage or interruption of any utilities or services to be furnished by Landlord hereunder, Landlord shall immediately notify County of such failure, stoppage or interruption, diligently attempt to restore service as promptly as possible and shall keep County apprised of its efforts. In the event Landlord is unable to supply any of the Building' sanitary, electrical, heating, air conditioning, water, fire protection and security, audio, video or electronic communications, hazard detection and alarm, or other essential services serving the Premises (collectively, "Essential Services") and such inability of Landlord impairs County's ability to carry on its business in the Premises for a period of five (5) or more business days, and such interruption in services is not beyond the reasonable control of Landlord, then the Rent shall be abated based on the extent to which County is not able to and does not use the Premises as a result of such interruption in services. Landlord shall use commercially reasonable efforts to restore disrupted Essential Services as soon as possible. However, if such failure to provide any Essential Services continues for any reason not beyond the reasonable control of Landlord for thirty (30) days and County is unable to use the Premises and ceases to use the Premises for more than 30 days, then County may, without limiting any of its other rights or remedies hereunder or at law or in equity, terminate this Lease upon written notice to Landlord, unless Landlord supplies County with evidence reasonably satisfactory to County that the Essential Services will be restored within sixty (60) days of the date County's use was interrupted, and the Essential Services is actually restored within such 60-day period. Except as expressly set forth herein, County shall not be entitled to any abatement of Rent or right to terminate this Lease due to an interruption in Essential Services, and in no event if Landlord's inability to supply Essential Services to County is due solely to the acts, omissions or negligence of County and its Agents.

10. COMPLIANCE WITH LAWS; PREMISES CONDITION

10.1. Premises Condition and Landlord's Compliance with Laws;

Landlord represents and warrants to County that, to the best of Landlord's knowledge, the Building is, or as of the completion of the Base Building Improvements will be, in compliance with all applicable building safety codes and regulations and that all portions of the Property and the Building along the path of travel to the Premises including, but not limited to, the Building entrances, Common Areas, restrooms, elevators, lobbies, telephone banks, drinking fountains and parking areas are now, or as of the completion

of the Base Building Improvements will be, in compliance with the requirements of the Americans With Disabilities Act of 1990 and Title 24 of the California Code of Regulations and all other applicable federal, state, local and administrative laws, rules, regulations, orders and requirements intended to provide equal accessibility for persons with disabilities (collectively, "Disabilities Laws"). To best of Landlord's knowledge, the Building Systems are in working order and there are no material latent structural defects in the Building, the Premises or the Property which would render the Building or the Premises unsafe for occupancy.

10.2. County's Compliance with Laws

County shall use the Premises during the Term in compliance with applicable Laws, except that County shall not be required to make any structural alterations, additions or other modifications in order to comply therewith unless such modifications are necessary solely because of County's particular use of the Premises as opposed to office users generally or any Alterations to the Premises made by County pursuant to Section 7 hereof. County shall be responsible for complying with any requirement of the Disabilities Laws relating to the placement of County's furniture or other County Personal Property and the operation of any programs in the Premises, other than any requirement relating to the physical structure, fixtures and permanent improvements of the Premises or portions of the Property or Building along the path of travel to the Premises, which are Landlord's obligation as provided in Section 10.1 above. Notwithstanding the foregoing, Landlord shall not be obligated to perform any such work if the requirement to do such work is triggered by Alterations performed by County.

10.3. County's Compliance with Insurance Requirements

County shall not conduct any use in or about the Premises that would: (a) invalidate or be in conflict with any fire or other casualty insurance policies covering the Property or any property located therein, (b) result in a refusal by fire insurance companies of good standing to insure the Property or any such property in amounts reasonably satisfactory to Landlord or the holder of any mortgage or deed of trust encumbering the Property, (c) cause an increase in the fire insurance premium for the Property unless County agrees to pay such increase, or (d) subject Landlord to any liability or responsibility for injury to any person or property by reason solely of any business operation being conducted by County in the Premises; provided, however, Landlord shall provide County with reasonable prior written notice of any applicable insurance requirements and no such insurance requirements shall materially and adversely interfere with use of the Premises for normal office purposes.

11. SUBORDINATION

This Lease is and shall be subject and subordinate to the following (each an "Encumbrance"): (a) any reciprocal easement agreements and ground leases or other underlying leases that may now exist or hereafter be executed affecting Landlord's interest in the Property, or any portion thereof, and (b) the lien of any mortgage or deed of trust that may now exist or hereafter be executed by Landlord in any amount for which any part of the Property, any ground leases or underlying leases, or Landlord's interest or estate therein, is specified as security; provided that as a condition to County's agreement to subordinate in writing its interest hereunder to any such Encumbrance hereafter placed on the Property, the holder of the Encumbrance shall, at County's request, enter into a subordination and nondisturbance agreement with County in a form then commercially reasonable. Notwithstanding the foregoing, Landlord shall have the right to subordinate or cause to be subordinated to this Lease any Encumbrance. In the event that any ground lease or underlying lease terminates for any reason or any mortgage or deed of trust is foreclosed or a conveyance in lieu of foreclosure is made for any reason, County shall pay subsequent Rent and attorn to and become the tenant of such successor Landlord, at the option of such successor-in-interest, provided that County has received proper written notice of such succession and the name and address of the successor landlord, and further provided that, in the case of any Encumbrance hereafter executed, as a condition to such attornment the holder of such Encumbrance shall, at County's request, agree that so long as County is not in default hereunder, such holder shall recognize this Lease and shall not disturb County in its possession of the Premises for any reason other than one that would entitle Landlord to terminate this Lease or otherwise dispossess County of the Premises in accordance with the terms hereof. The provisions of this Section shall be self-operative and no further instrument shall be required other than as provided in this Section. County agrees, however, to execute upon request by Landlord and in a form reasonably

acceptable to County, any additional documents evidencing the priority or subordination of this Lease with respect to any such Encumbrance as provided herein.

Landlord shall use commercially reasonable efforts to provide to County, within 30 days after execution of this Lease, executed non-disturbance and attornment agreements from the holder of any existing Encumbrance. The form of such agreement shall be subject to County's reasonable approval.

12. DAMAGE AND DESTRUCTION

If the Premises, the Building or any Building Systems are damaged by fire or other casualty, Landlord shall repair the same without unreasonable delay (and if Landlord is then carrying insurance on the Leasehold Improvements or if County at its sole option makes funds available to Landlord, Landlord shall also repair the Leasehold Improvements), provided that such repairs can be made under applicable laws within ninety (90) days after Landlord obtains all necessary permits for such repairs but not later than one hundred eighty (180) days after the date of such damage (the "Repair Period"). In such event, this Lease shall remain in full force and effect, except that County shall be entitled to an abatement of Rent while such repairs are being made. Such abatement in Rent shall be based upon the extent to which such damage and the making of such repairs materially interfere with County's business in the Premises. Landlord's repairs shall not include, and the Rent shall not be abated as a result of, any damage by fire or other cause to County's Personal Property or any damage caused by the negligence or willful misconduct of County or its employees or Agents.

Within twenty (20) days after the date of such damage, Landlord shall notify County whether or not, in Landlord's reasonable judgment made in good faith, such repairs can be made within the Repair Period. If such repairs cannot be made within the Repair Period, then either party hereto may, by written notice to the other given within thirty (30) days after receiving the notice regarding Landlords decision, terminate this Lease as of the date specified in such notice, which date shall be not less than thirty (30) nor more than sixty (60) days after notice is given by Landlord. In case of termination, the Rent shall be reduced by a proportionate amount based upon the extent to which such damage interferes with the conduct of County's business in the Premises, and County shall pay such reduced Rent up to the date of termination. Landlord shall refund to County any Rent previously paid for any period of time subsequent to such date of termination.

Notwithstanding the foregoing, in the event the Premises are damaged or destroyed and insurance proceeds are not available to fully pay for restoration of the Premises (excluding any deductible, for which Landlord shall be responsible, except in the case of earthquake if Landlord carries earthquake insurance), Landlord may terminate this Lease by written notice to County within thirty (30) days of the date Landlord receives written notice that the cost of repairs are not fully covered by insurance. Such notice from Landlord shall include adequate written evidence of the denial of insurance coverage. If Landlord does not elect to terminate this Lease as provided above, the Lease shall remain in full force and effect, and Landlord shall repair and restore the Premises as provided above.

If at any time during the last twelve (12) months of the Term of this Lease there is substantial damage that Landlord would be required to repair hereunder, Landlord or County may, at the respective option of each, terminate this Lease as of the date such damage occurred by giving written notice to the other party of its election to do so within thirty (30) days after the date of such damage; provided, however, that neither party may terminate this Lease if it would take less than thirty (30) days from the date of the casualty to repair such damage and there are at least 6 months remaining in the lease term.

The parties intend that the provisions of this Section govern fully their rights and obligations in the event of damage or destruction, and Landlord and County each hereby waives and releases any right to terminate this Lease in whole or in part under Section 1932, Subdivision 2, Section 1933, Subdivision 4, and Sections 1941 and 1942 of the Civil Code of California or under any similar law, statute or ordinance now or hereafter in effect, to the extent such rights are inconsistent with the provisions hereof.

13. EMINENT DOMAIN

13.1. Definitions

(a) "Taking" means a taking or damaging, including severance damage, by eminent domain, inverse condemnation or for any public or quasi-public use under law. A Taking may occur pursuant to the recording of a final order of condemnation, or by voluntary sale or conveyance in lieu of condemnation or in settlement of a condemnation action.

(b) "Date of Taking" means the earlier of (i) the date upon which title to the portion of the Property taken passes to and vests in the condemnor or (ii) the date on which County is dispossessed.

(c) "Award" means all compensation, sums or anything of value paid, awarded or received for a Taking, whether pursuant to judgment, agreement, settlement or otherwise.

13.2. General

If during the Term or during the period between the execution of this Lease and the Commencement Date, there is any Taking of all or any part of the Premises or any interest in this Lease, the rights and obligations of the parties hereunder shall be determined pursuant to this Section. County and Landlord intend that the provisions hereof govern fully in the event of a Taking and accordingly, the parties each hereby waive any right to terminate this Lease in whole or in part under Sections 1265.110, 1265.120, 1265.130 and 1265.140 of the California Code of Civil Procedure or under any similar law now or hereafter in effect.

13.3. Total Taking; Automatic Termination

If there is a total Taking of the Premises, then this Lease shall terminate as of the Date of Taking.

13.4. Partial Taking; Election to Terminate

(a) If there is a Taking of any portion (but less than all) of the Premises, then this Lease shall terminate in its entirety if all of the following exist: (A) the partial Taking, in County's reasonable judgment, renders the remaining portion of the Premises untenantable or unsuitable for continued use by County for its intended purposes or otherwise materially adversely affect County's normal operations in the Premises, (B) the condition rendering the Premises untenantable or unsuitable either is not curable or is curable but Landlord is unwilling or unable to cure such condition, and (C) County elects to terminate.

(b) In the case of a partial taking of a substantial portion of the Building or the Property, and if subsection (a) above does not apply, County and Landlord shall each have the right to terminate this Lease by written notice to the other within thirty (30) days after the Date of Taking, provided that, as a condition to County's right to terminate, the portion of the Building or the Property taken shall, in County's reasonable judgment, render the Premises unsuitable for continued use by County for its intended purposes or otherwise materially adversely affect County's normal operations in the Premises.

(c) Either party electing to terminate under the provisions of this Section 13.4 shall do so by giving written notice to the other party before or within thirty (30) days after the Date of Taking, and thereafter this Lease shall terminate upon the later of the thirtieth (30th) day after such written notice is given or the Date of Taking.

13.5. Rent; Award

Upon termination of this Lease pursuant to an election under Section 13.4 above, then: (i) County's obligation to pay Rent shall continue up until the date of termination, and thereafter shall cease, except that Rent shall be reduced as provided in Section 13.6 below for any period during which this Lease continues in effect after the Date of Taking, and (ii) Landlord shall be entitled to the entire Award in connection therewith, except that County shall receive any Award made specifically for County's relocation expenses, the interruption of or damage to County's business or County's improvements pertaining to realty, or damage to County's Personal Property.

13.6. Partial Taking; Continuation of Lease

If there is a partial Taking of the Premises under circumstances where this Lease is not terminated in its entirety under Section 13.4 above, then this Lease shall terminate as to the portion of the Premises so taken, but shall remain in full force and effect as to the portion not taken, and the rights and obligations

of the parties shall be as follows: (a) Rent shall be reduced by an amount that is in the same ratio to the Rent as the area of the Premises taken bears to the area of the Premises prior to the Date of Taking, and (b) Landlord shall be entitled to the entire Award in connection therewith, provided that County shall receive any Award made specifically for County's relocation expenses, the interruption of or damage to County's business or County's improvements pertaining to realty, or damage to County's Personal Property.

13.7. Temporary Taking

Notwithstanding anything to contrary in this Section, if a Taking occurs with respect to the Premises for a limited period of time not in excess of sixty (60) consecutive days, this Lease shall remain unaffected thereby, and County shall continue to pay Rent and to perform all of the terms, conditions and covenants of this Lease. In the event of such temporary Taking, County shall be entitled to receive that portion of any Award representing compensation for the use or occupancy of the Premises during the Term up to the total Rent owing by County for the period of the Taking.

14. ASSIGNMENT AND SUBLETTING

Except as provided in this Section below, County shall not directly or indirectly sell, assign, encumber, pledge or otherwise transfer or hypothecate all or any part of its interest in or rights with respect to the Premises or its leasehold estate hereunder or permit all or any portion of the Premises to be occupied by anyone other than itself or sublet all or any portion of the Premises, without Landlord's prior written consent in each instance, which shall not be unreasonably withheld or delayed. County shall have the right from time to time, upon notice to but without the consent of Landlord, to transfer this Lease or use and occupancy of all or any of the Premises to any department, commission or agency of the County of San Mateo for uses permitted under this Lease. In no event shall any assignment or sublease modify County's obligations hereunder or release County from liability under this Lease. Any assignment or sublease approved by Landlord hereunder shall be pursuant to a written assignment or sublease in form reasonably acceptable to Landlord. Consent to one assignment or sublease hereunder shall not be construed as consent to a future or additional assignment or sublease. Any assignment or sublease in violation of this Article 14 shall be null and void. County shall pay the Landlord 50% of any Sublease Premium or Assignment Premium. "Sublease Premium" means all rent, additional rent and other consideration received by County in excess of the Rent payable by County hereunder after deducting any customary and reasonable costs associated with such sublease including, but not limited to, brokerage commission paid by County to an independent broker in connection with the sublease, which costs shall be amortized over the term of the Sublease. County shall pay to Landlord Landlord's share of the Sublease Premium monthly within 5 days after County receives payment under the sublease. "Assignment Premium" means all rent, additional rent and other consideration received by County in connection with an assignment after deducting any such reasonable and customary costs paid by County in connection with the assignment. County shall pay to Landlord Landlord's share of the Assignment Premium within 5 days after receipt from assignees.

15. DEFAULT; REMEDIES

15.1. Events of Default by County

Any of the following shall constitute an event of default by County hereunder:

(a) County's failure to make any timely payment of Rent and to cure such nonpayment within five (5) business days after receipt of written notice thereof from Landlord, provided that for the first monthly payment of Rent at the beginning of the Term and for the first monthly payment of Rent after the beginning of each new fiscal year for County, County shall have twenty (20) days to cure any such nonpayment after written notice thereof from Landlord;

(b) County's abandonment of the Premises (within the meaning of California Civil Code Section 1951.3); or

(c) County's failure to perform any other covenant or obligation of County hereunder (not involving the payment of money) and to cure such non-performance within thirty (30) days of the date of receipt of notice thereof from Landlord, provided that if more than thirty (30) days are reasonably required for such cure, no event of default shall occur if County commences such cure within such period and diligently prosecutes such cure to completion.

15.2. Landlord's Remedies

Upon the occurrence of any event of default by County that is not cured within the applicable grace period as provided above, Landlord shall have all rights and remedies available pursuant to law, at equity or granted hereunder, including, without limitation, the following:

(a) The rights and remedies provided by California Civil Code Section 1951.2 (damages on termination for breach), including, but not limited to, the right to terminate County's right to possession of the Premises and to recover the worth at the time of award of the amount by which the unpaid Rent for the balance of the Term after the time of award exceeds the amount of rental loss for the same period that County proves could be reasonably avoided, as computed pursuant to subsection (b) of such Section 1951.2.

(b) The rights and remedies provided by California Civil Code Section 1951.4 (continuation of lease after breach and abandonment), which allows Landlord to continue this Lease in effect and to enforce all of its rights and remedies under this Lease, including the right to recover Rent as it becomes due, for so long as Landlord does not terminate County's right to possession, if County has the right to sublet or assign, subject only to reasonable limitations.

15.3. Landlord's Default

If Landlord fails to perform any of its material obligations under this Lease, and such failure materially impairs County's ability to conduct its business in the Premises, then (without limiting any of County's other rights under this Lease) County may, at its sole option, cure such default at Landlord's expense if such default continues after thirty (30) days from the date County gives written notice to Landlord of County's intention to perform such cure, and Landlord shall promptly reimburse County for the reasonable costs incurred by the County in curing such default. However, in the case of a material default which for causes beyond Landlord's control (excluding any financial inability to perform) cannot with due diligence be cured within such 30-day period, such 30-day period shall be extended if Landlord, promptly upon receipt of County's notice, advises County of Landlord's intention to take all steps reasonably required to cure such default, and Landlord promptly commences such cure and diligently prosecutes the same to completion. Notwithstanding the foregoing, if any such default by Landlord continues for ninety (90) days from the date County gives written notice as set forth hereinabove and materially impairs County's ability to conduct its business in the Premises, then County shall have the right to terminate this Lease upon written notice to Landlord within thirty (30) days after the expiration of such 90-day period. This provision shall not limit any other rights that the County may have at law or in equity; however, in no event shall County be entitled to consequential damages hereunder.

16. INDEMNITIES

16.1. County's Indemnity

County, as a material part of the consideration to be rendered to Landlord, waives any and all claims against Landlord for damages by reason of any death or injury to any person or persons, including County, County's agents, employees and invitees, or any injury to property of any kind whatsoever and to whomsoever belonging, including the property of County, arising at any time and from any cause other than by reason of the negligence or willful misconduct of Landlord, in, on or about the Premises or the Property, except as expressly set forth in section 16.2. County shall indemnify, defend and hold harmless ("Indemnify") Landlord and its Agents from and against any and all claims, costs and expenses (collectively, "Claims"), incurred as a result of (a) County's use of the Premises, (b) any default by County in the performance of any of its material obligations under this Lease, or (c) any negligent acts or omissions of County or its Agents in, on or about the Premises or the Property; provided, however, County shall not be obligated to Indemnify Landlord or its Agents to the extent any Claim arises out of the negligence or willful misconduct of Landlord or its Agents. In any action or proceeding brought against Landlord or its Agents by reason of any Claim of Indemnified by County hereunder, County may, at its sole option, elect to defend such Claim by attorneys in County's Office of County Counsel, by other attorneys selected by County, or both. County shall have the right to control the defense and to determine the settlement or compromise of any action or proceeding, provided that Landlord shall have the right, but not the obligation, to participate

in the defense of any such Claim at its sole cost. County's obligations under this Section shall survive the termination of the Lease.

16.2. Landlord's Indemnity

Except to the extent due to a default by County under this Lease or to the negligence or willful misconduct of County, its agents or employees, Landlord shall Indemnify County and its Agents from and against any and all claims arising from personal injury or loss of life as a result of Landlord's negligence or willful misconduct or Default of its obligations hereunder (after expiration of any applicable notice and cure period), or any breach of any representations or warranties made by Landlord under this Lease, provided that in no event shall Landlord be liable for consequential damages or loss of business or income. In any action or proceeding brought against County or its Agents by reason of any Claim Indemnified by Landlord hereunder, Landlord may, at its sole option, elect to defend such Claim by attorneys selected by Landlord. Landlord shall have the right to control the defense and to determine the settlement or compromise of any action or proceeding, provided that County shall have the right, but not the obligation, to participate in the defense of any such Claim at its sole cost. Landlord's obligations under this Section shall survive the termination of the Lease.

16.3. Concurrent Negligence

In the event of concurrent negligence of County, its officers and/or employees, and Landlord, its officers and/or employees, then the liability for any and all claims for injuries or damage to persons and/or property which arise out of terms and conditions of this Agreement shall be apportioned according to the California theory of comparative negligence.

17. INSURANCE

17.1. County's Self-Insurance

Landlord acknowledges that County maintains a program of self-insurance and agrees that County shall not be required to carry any insurance with respect to this Lease. County assumes the risk of damage to any of County's Personal Property.

County is presently self-insured in the amount of $1,000,000 each occurrence giving rise to personal injury and property damage liabilities for which County could be held responsible. In addition, County presently has in force excess insurance in the amount of $55,000,000 annual in the aggregate. Said self-insurance and excess insurance provide coverage for personal injury and property damage liabilities arising out of the acts and/or omissions of County, its officers, agents, contractors and employees, while on the Premises. County upon request of Landlord shall furnish Landlord with a Certificate of Insurance that shall provide that Landlord would receive ten (10) days' prior notice of cancellation, change in scope or modification in coverage of such coverage. Nothing herein shall be interpreted to require County or its insurer to provide a defense for, to provide insurance for, or to indemnify Landlord except as may be otherwise required by law.

17.2. Landlord's Self-Insurance

County acknowledges that Landlord maintains a program of self-insurance and agrees that Landlord shall not be required to carry any insurance with respect to the Property. Landlord is presently self-insured in the amount of $1,000,000.00, each occurrence giving rise to personal injury and property damage liabilities for which Landlord could be held responsible.

17.3. Waiver of Subrogation

Notwithstanding anything to the contrary contained herein, Landlord hereby waives any right of recovery against County for any loss or damage sustained by Landlord with respect to the Property or the Premises or any portion thereof or the contents of the same or any operation therein, whether or not such loss is caused by the fault or negligence of County, to the extent (i) such loss or damage is actually recovered from valid and collectible insurance covering the Landlord, and (ii) the Landlord's insurance carrier agrees to its written waiver of right to recover such loss or damage.

18. ACCESS BY LANDLORD

Landlord reserves for itself and any designated Agent the right to enter the Premises at all reasonable times and, except in cases of emergency (in which event Landlord shall give any reasonable notice), after giving County at least twenty four (24) hours' advance written or oral notice, for the purpose of (i) inspecting the Premises, (ii) supplying any service to be provided by Landlord hereunder, (iii) showing the Premises to any prospective purchasers, mortgagees or, during the last twelve (12) months of the Term of this Lease, tenants, (iv) posting notices of non-responsibility, and (v) altering, improving or repairing the Premises and any portion of the Property, and Landlord may for that purpose erect, use and maintain necessary structures in and through the Premises where reasonably required by the character of the work to be performed, provided that the entrance to the Premises shall not be blocked thereby, and further provided that County's use shall not be materially interfered with.

19. ESTOPPEL CERTIFICATES

Either party, from time to time during the Term upon not less than ten (10) days' prior written notice from the other party, shall execute, acknowledge and deliver to the other party, or such persons or entities designated by such other party, a certificate stating: (a) the Commencement Date and Expiration Date of this Lease, (b) that this Lease is unmodified and in full force and effect (or, if there have been modifications, that the Lease is in full force and effect as modified and stating the modifications), (c) that there are no defaults under this Lease (or if so, specifying the same), (d) the date to which Rent has been paid, and (e) any other information that may be reasonably required.

20. SURRENDER OF PREMISES

Upon the expiration or sooner termination of this Lease, County shall surrender the Premises to Landlord in good order and condition, reasonable use and wear and damage by fire or other casualty excepted. On or before the Expiration Date, County shall remove from the Premises all of County's Personal Property**,** County's telecommunications, data and computer facilities and any Alterations County desires or is required to remove from the Premises pursuant to the provisions of Section 7.1 (Alterations by County), above. County shall repair or pay the cost of repairing any damage to the Premises or the Building resulting from such removal. Notwithstanding anything to the contrary in this Lease, County shall not be required to demolish or remove from the Premises any of the Leasehold Improvements. County's obligations under this Section shall survive the expiration or earlier termination of this Lease.

21. HAZARDOUS MATERIALS

21.1. Definitions

As used in this Lease, the following terms shall have the meanings hereinafter set forth:

(a) "Environmental Laws" shall mean any federal, state, local or administrative law, rule, regulation, order or requirement relating to industrial hygiene, environmental conditions or Hazardous Material, whether now in effect or hereafter adopted.

"Hazardous Material" shall mean any material that, because of its quantity, concentration or physical or chemical characteristics, is deemed by any federal, state or local governmental authority to pose a present or potential hazard to human health or safety or to the environment. Hazardous Material includes, without limitation, any material or substance defined as a "hazardous substance," or "pollutant" or "contaminant" pursuant to the Comprehensive Environmental Response, Compensation and Liability Act of 1980 ("CERCLA", also commonly known as the "Superfund" law), as amended, (42 U.S.C. Sections 9601 et seq.), or pursuant to Section 25316 of the California Health & Safety Code; any "hazardous waste" listed pursuant to Section 25140 of the California Health & Safety Code; any asbestos and asbestos containing materials whether or not such materials are part of the structure of the Building or are naturally occurring substances on or about the Property; and petroleum, including crude oil or any fraction thereof, natural gas or natural gas liquids.

(b) "Release" when used with respect to Hazardous Material shall include any actual or imminent spilling, leaking, pumping, pouring, emitting, emptying, discharging, injecting, escaping, leaching, dumping, or disposing into or inside the Building, or in, on, under or about the Property.

21.2. Landlord's Representations and Covenants

Landlord represents and warrants to County that, to the best of Landlord's knowledge, the following statements are true and correct and will be true and correct as of the Commencement Date: (a) the Property is not in violation of any Environmental Laws; (b) the Property is not now, nor has it been, used for the manufacture, use, storage, discharge, deposit, transportation or disposal of any Hazardous Material, except for the use of such substances in such limited quantities as are customarily used in offices, which limited use has been and is in compliance with Environmental Laws; (c) the Property does not consist of any landfill or contain any underground storage tanks; (d) the Building do not consist of any asbestos-containing materials or building materials that contain any other Hazardous Material, nor do the Premises or the Common Areas contain any lead-based paints; (e) there has been and is no Release of any Hazardous Material in the Building or in, on, under or about the Property; and (f) the Property is not subject to any claim by any governmental regulatory agency or third party related to the Release of any Hazardous Material, and there is no inquiry by any governmental agency (including, without limitation, the California Department of Toxic Substances Control or the Regional Water Quality Control Board) with respect to the presence of Hazardous Material in the Building or in, on, under or about the Property, or the migration of Hazardous Material from or to other real property. Subject to County's obligations under this Section below, Landlord shall maintain the Property throughout the Term in compliance with all Environmental Laws that could affect the health, safety and welfare of County's employees or County's use, occupancy or enjoyment of the Premises for their intended purposes.

21.3. Landlord's Environmental Indemnity

Without limiting Landlord's Indemnity in Section 16.2 (Landlord's Indemnity), above, Landlord shall Indemnify County and its Agents against any and all Claims arising during or after the Term of this Lease (a) as a result of any breach of any of Landlord's representations, warranties or covenants in the preceding Section, or (b) in connection with any presence or Release of Hazardous Material in the Building or on, under or about the Property, unless County or its Agents caused such Release.

21.4. County's Covenants

Neither County nor its Agents shall cause any Hazardous Material to be brought upon, kept, used, stored, generated or disposed of in, on or about the Premises or the Property, or transported to or from the Premises or the Property, in violation of any Environmental Laws, provided that County may use such substances in such limited amounts as are customarily used in offices and health services so long as such use is in compliance with all applicable Environmental Laws.

21.5. County's Environmental Indemnity

If County breaches its obligations contained in the preceding Section 21.4, or if County or its Agents cause the Release of Hazardous Material from, in, on or about the Premises or the Property, then County shall Indemnify Landlord against any and all Claims arising during or after the Term of this Lease as a result of such Release, except to the extent Landlord or its Agents is responsible for the Release. The foregoing Indemnity shall not include any Claims resulting from the non-negligent aggravation by County, its Agents or Invitees of physical conditions of the Premises, or other parts of the Property, existing prior to County's occupancy.

22. SPECIAL PROVISIONS

Not Used

23. GENERAL PROVISIONS

23.1. Notices

Except as otherwise specifically provided in this Lease, any notice given under this Lease shall be in writing and given by delivering the notice in person or by commercial courier, or by sending it by first-

class mail, certified mail, return receipt requested, or Express Mail, return receipt requested, with postage prepaid, to: (a) County at County's address set forth in the Basic Lease Information; or (b) Landlord at Landlord's address set forth in the Basic Lease Information; or (c) such other address as either Landlord or County may designate as its new address for such purpose by notice given to the other in accordance with this Section. Any notice hereunder shall be deemed to have been given and received two (2) days after the date when it is mailed if sent by first-class, certified mail, one day after the date when it is mailed if sent by Express Mail, or upon the date personal delivery is made. For convenience of the parties, copies of notices may also be given by telephone facsimile to the facsimile number set forth in the Basic Lease Information or such other number as may be provided from time to time; however, neither party may give official or binding notice by telephone facsimile.

23.2. No Implied Waiver

No failure by either party to insist upon the strict performance of any obligation of the other party under this Lease or to exercise any right, power or remedy consequent upon a breach thereof shall constitute a waiver of any such breach or of such term, covenant or condition. No acceptance of full or partial Rent by Landlord while County is in default hereunder shall constitute a waiver of such default by Landlord. No express written waiver of any default or the performance of any provision hereof shall affect any other default or performance, or cover any other period of time, other than the default, performance or period of time specified in such express waiver. One or more written waivers of a default or the performance of any provision hereof shall not be deemed to be a waiver of a subsequent default or performance. The consent of Landlord or County given in one instance under the terms of this Lease shall not relieve the other party of any obligation to secure the consent to any other or future instance under the terms of the Lease.

23.3. Amendments

Neither this Lease nor any terms or provisions hereof may be changed, waived, discharged or terminated, except by a written instrument signed by the party against which the enforcement of the change, waiver, discharge or termination is sought. No waiver of any breach shall affect or alter this Lease, but each and every term, covenant and condition of this Lease shall continue in full force and effect with respect to any other then-existing or subsequent breach thereof. Whenever this Lease requires or permits the giving by County of its consent or approval, the County Manager, or his or her designee shall be authorized to provide such approval, except as otherwise provided by applicable law, including the County's Ordinance Code and Charter. Any amendments or modifications to this Lease, including, without limitation, amendments to or modifications to the exhibits to this Lease, shall be subject to the mutual written agreement of Landlord and County and may be made upon the sole approval of the County Manager, or his or her designee; provided, however, material amendments or modifications to this Lease which are not anticipated as specifically set forth in this Lease (i) changing the legal description of the Premises, (ii) increasing the Term, (iii) increasing the Rent, (iv) changing the general use of the Premises from the use authorized under Section 5.1 of this Lease, and (vi) any other amendment or modification which materially increases the County's liabilities or financial obligations under this Lease shall additionally require the approval of the County's Board of Supervisors.

23.4. Authority

Landlord represents and warrants to County that the execution and delivery of this Lease by Landlord has been duly authorized and does not violate any provision of any agreement, law or regulation to which Landlord or the Property is subject.

23.5. Parties and Their Agents; Approvals

If applicable, the word "Landlord" as used in this Lease shall include the plural as well as the singular. As used in this Lease, the term "Agents" when used with respect to either party shall include the agents, employees, officers and contractors of such party, and the term "Invitees" when used with respect to County shall include the clients, customers, invitees, guests, licensees, assignees or subtenants of County. All approvals, consents or other determinations permitted or required by County under this Lease shall be made by or through the County Manager, or his or her designee, unless otherwise provided in this

Lease, subject to any applicable limitations in the Ordinance Code or the Charter of the County of San Mateo.

23.6. Interpretation of Lease

The captions preceding the articles and sections of this Lease and in the table of contents have been inserted for convenience of reference only and such captions shall in no way define or limit the scope or intent of any provision of this Lease. This Lease has been negotiated at arm's length and between persons sophisticated and knowledgeable in the matters dealt with herein and shall be interpreted to achieve the intent and purposes of the parties, without any presumption against the party responsible for drafting any part of this Lease. Except as otherwise specifically provided herein, wherever in this Lease Landlord or County is required or requested to give its consent or approval to any matter or action by the other, such consent or approval shall not be unreasonably withheld or delayed and the reasons for disapproval of consent shall be stated in reasonable detail in writing. Provisions in this Lease relating to number of days shall be calendar days, unless otherwise specified, provided that if the last day of any period to give notice, reply to a notice or to undertake any other action occurs on a Saturday, Sunday or a bank or County holiday, then the last day for undertaking the action or giving or replying to the notice shall be the next succeeding business day. Use of the word "including" or similar words shall not be construed to limit any general term, statement or other matter in this Lease, whether or not language of non-limitation, such as "without limitation" or similar words, are used.

23.7. Successors and Assigns

Subject to the provisions of Section 14 relating to assignment and subletting, the terms, covenants and conditions contained in this Lease shall bind and inure to the benefit of Landlord and County and, except as otherwise provided herein, their personal representatives and successors and assigns. There are no third-party beneficiaries to this Lease.

23.8. Brokers

Neither party has had any contact or dealings regarding the leasing of the Premises, or any communication in connection therewith, through any licensed real estate broker or other person who could claim a right to a commission or finder's fee in connection with the lease contemplated herein, except for the broker, if any, identified in the Basic Lease Information, whose commission, if any is due, shall be the sole responsibility of Landlord pursuant to a separate written agreement between Landlord and such broker, and County shall have no liability therefor. In the event that any other broker or finder perfects a claim for a commission or finder's fee based upon any such contact, dealings or communication, the party through whom the broker or finder makes his claim shall be responsible for such commission or fee and shall Indemnify the other party from any and all Claims incurred by the indemnified party in defending against the same. The provisions of this Section shall survive any termination of this Lease.

23.9. Severability

If any provision of this Lease or the application thereof to any person, entity or circumstance shall, to any extent, be invalid or unenforceable, the remainder of this Lease, or the application of such provision to persons, entities or circumstances other than those as to which it is invalid or unenforceable, shall not be affected thereby, and each other provision of this Lease shall be valid and be enforceable to the full extent permitted by law.

23.10. Governing Law

This Lease shall be construed and enforced in accordance with the laws of the State of California and the Ordinance Code and Charter of the County of San Mateo.

23.11. Entire Agreement

The parties intend that this Lease (including all of the attached exhibits, which are made a part of this Lease) shall be the final expression of their agreement with respect to the subject matter hereof and may not be contradicted by evidence of any prior or contemporaneous written or oral agreements or understandings. The parties further intend that this Lease shall constitute the complete and exclusive

statement of its terms and that no extrinsic evidence whatsoever (including prior drafts hereof and changes therefrom) may be introduced in any judicial, administrative or other legal proceeding involving this Lease.

23.12. Holding Over

Should County hold over in possession of the Premises after the expiration of the Term with Landlord's consent, such holding over shall not be deemed to extend the Term or renew this Lease, but such tenancy thereafter shall continue as a month-to-month tenancy. Such tenancy shall be on all the terms and conditions set forth in this Lease and at the monthly Base Rent in effect during the last month of the Term of the Lease or such other rental as Landlord and County may mutually agree in writing as a condition to Landlord's consent to such holding over, and County shall continue as a month-to-month tenant until the tenancy shall be terminated by Landlord giving County or County giving Landlord at least thirty (30) days' prior written notice of termination. Should County hold over without Landlord's consent, the rent payable by County during the period of such holding over shall be one hundred ten percent (110%) of the monthly Base Rent in effect during the last month of the Term of this Lease, and such tenancy shall otherwise be on the terms and conditions contained herein.

23.13. Cumulative Remedies

All rights and remedies of either party hereto set forth in this Lease shall be cumulative, except as may otherwise be provided herein.

23.14. Time of Essence

Time is of the essence with respect to all provisions of this Lease in which a definite time for performance is specified.

23.15. Survival of Indemnities

Termination of this Lease shall not affect the right of either party to enforce any and all indemnities and representations and warranties given or made to the other party under this Lease, nor shall it affect any provision of this Lease that expressly states it shall survive termination hereof. Each party hereto specifically acknowledges and agrees that, with respect to each of the indemnities contained in this Lease, the indemnitor has an immediate and independent obligation to defend the indemnitees from any claim which actually or potentially falls within the indemnity provision even if such allegation is or may be groundless, fraudulent or false, which obligation arises at the time such claim is tendered to the indemnitor by the indemnitee and continues at all times thereafter.

23.16. Signs

County may install building interior window signage at the entry of Tenant's suite on the Premises subject to Landlord's prior approval as provided below. Landlord reserves the right to review the placement, design, and plan for any such sign prior to its erection or posting and agrees that the approval thereof shall not be unreasonably withheld or delayed.

23.17. Quiet Enjoyment and Title

Landlord covenants and represents that it has full right, power and authority to grant the leasehold estate hereunder, and covenants that County, upon paying the Rent hereunder and performing the covenants hereof, shall peaceably and quietly have, hold and enjoy the Premises and all appurtenances during the full Term of this Lease as against all persons or entities claiming by and through Landlord or on account of any action, inaction or agreement of Landlord or its Agents. Without limiting the provisions of Section 16 (Indemnities), Landlord agrees to Indemnify County and its Agents against Claims arising out of any assertion that would interfere with County's right to quiet enjoyment as provided in this Section.

23.18. Bankruptcy

Landlord represents and warrants to County that Landlord has neither filed nor been the subject of any filing of a petition under the federal bankruptcy law or any federal or state insolvency laws or laws for composition of indebtedness or for the reorganization of debtors, and, to the best of Landlord's knowledge, no such filing is threatened. Landlord and County agree that County's leasehold estate created hereby

includes, without limitation, all rights to receive and enjoy all services, facilities and amenities of the Premises, the Building and the Property as provided herein, and that if any of such services, facilities or amenities are terminated, or materially limited or restricted on account of any such case or proceeding, or for any other reason, County shall have the right to (i) contract directly with any third-party provider of such services, facilities or amenities to obtain the same, and (ii) offset against the Base Rent or other charges payable hereunder any and all reasonable costs and expenses incurred by County in obtaining such services, facilities or amenities.

23.19. Transfer of Landlord's Interest

Landlord shall have the right to transfer its interest in the Property, the Building or this Lease to any other financially responsible person or entity. In the event of any such transfer, Landlord shall be relieved, upon notice to County of the name and address of Landlord's successor, of any obligations accruing hereunder from and after the date of such transfer and upon delivering to County an express assumption by the transferee of all of Landlord's obligations hereunder.

23.20. Non-Liability of County Officials, Employees and Agents

Notwithstanding anything to the contrary in this Agreement, no elective or appointive board, commission, member, officer, employee or agent of County shall be personally liable to Landlord, its successors and assigns, in the event of any default or breach by County or for any amount which may become due to Landlord, its successors and assigns, or for any obligation of County under this Lease.

23.21. Counterparts

This Lease may be executed in two or more counterparts, each of which shall be deemed an original, but all of which taken together shall constitute one and the same instrument.

23.22. Certification by Landlord

By executing this Lease, Landlord certifies that Landlord is not suspended, debarred or otherwise excluded from participation in federal assistance programs. Landlord acknowledges that this certification of eligibility to receive federal funds is a material term of this Lease**.**

23.23. Acceptance of Lease by Landlord

NOTWITHSTANDING ANYTHING TO THE CONTRARY CONTAINED IN THIS LEASE, LANDLORD ACKNOWLEDGES AND AGREES THAT NO OFFICER OR EMPLOYEE OF COUNTY HAS AUTHORITY TO COMMIT COUNTY HERETO UNLESS AND UNTIL THE COUNTY'S BOARD OF SUPERVISORS SHALL HAVE DULY ADOPTED A RESOLUTION APPROVING THIS LEASE AND AUTHORIZING CONSUMMATION OF THE TRANSACTION CONTEMPLATED HEREBY. THEREFORE, ANY OBLIGATIONS OR LIABILITIES OF COUNTY HEREUNDER ARE CONTINGENT UPON ADOPTION OF SUCH A RESOLUTION, AND THIS LEASE SHALL BE NULL AND VOID UNLESS COUNTY'S BOARD OF SUPERVISORS AUTHORIZES EXECUTION OF THIS LEASE, IN ITS RESPECTIVE SOLE AND ABSOLUTE DISCRETION, AND IN ACCORDANCE WITH ALL APPLICABLE LAWS. APPROVAL OF THIS LEASE BY ANY DEPARTMENT, COMMISSION OR AGENCY OF COUNTY SHALL NOT BE DEEMED TO IMPLY THAT SUCH RESOLUTION WILL BE ADOPTED NOR WILL ANY SUCH APPROVAL CREATE ANY BINDING OBLIGATIONS ON COUNTY.

Landlord and County have executed this Lease as of the date first written above.

LANDLORD: CITY OF DALY CITY

BY:_____
Patricia E. Martel
City Manager

COUNTY: COUNTY OF SAN MATEO,
a political subdivision of the State of California

BY:_____
Don Horsley
President, Board of Supervisors

ATTESTED:

_____
Clerk of Said Board

EXHIBIT A-1

SITE PLAN

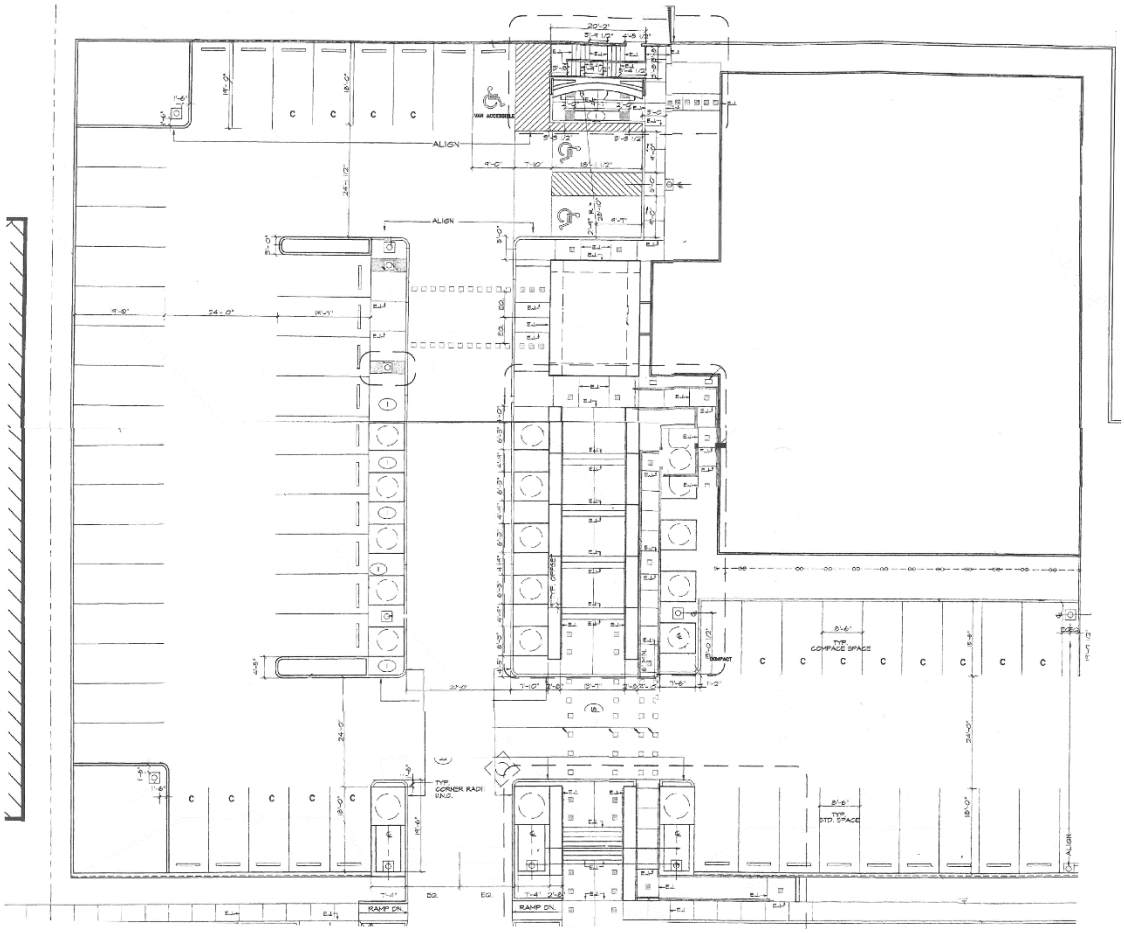

EXHIBIT A-2

FLOOR PLAN

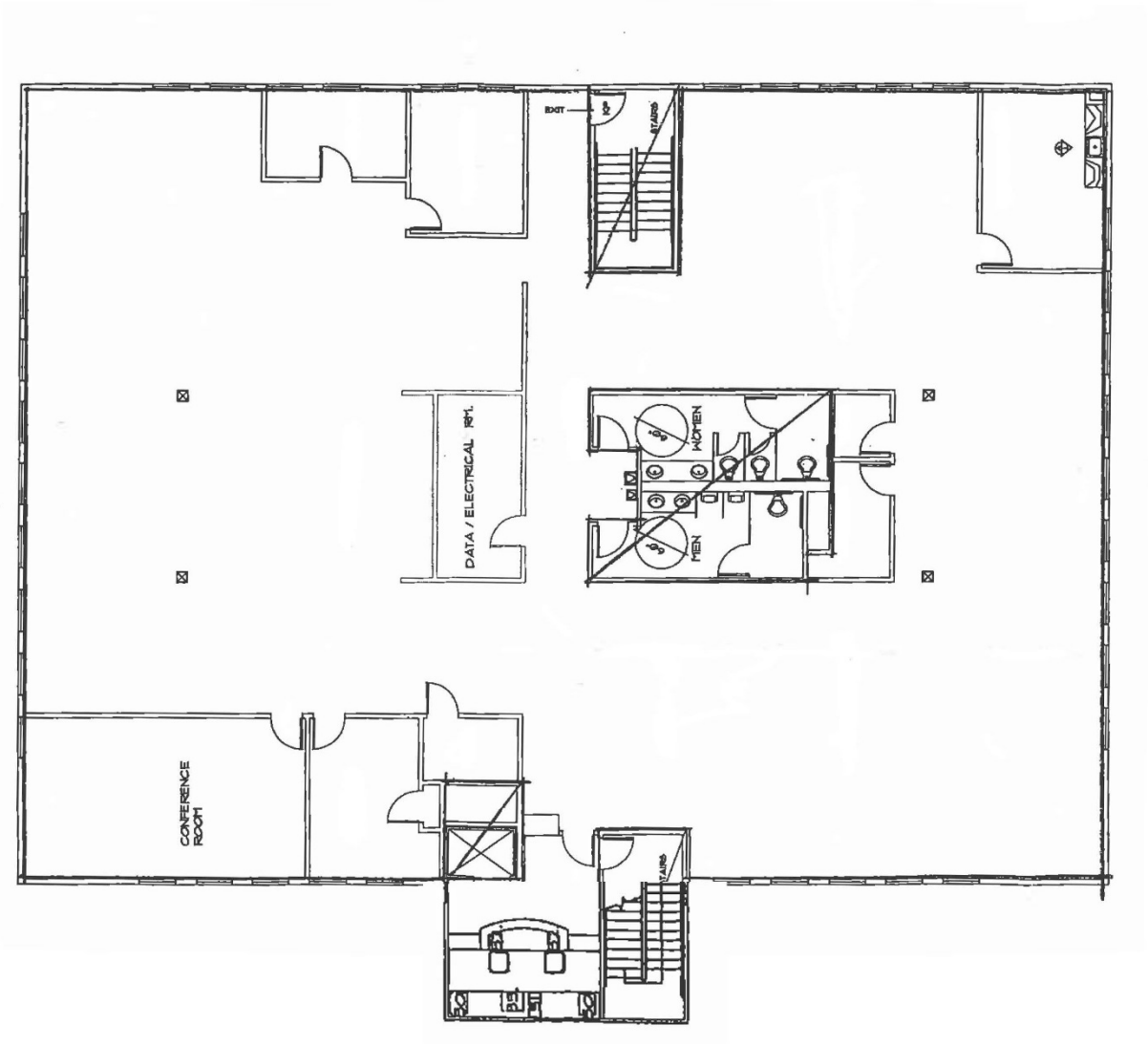

EXHIBIT A-3

LEASEHOLD IMPROVEMENTS

[Attached]

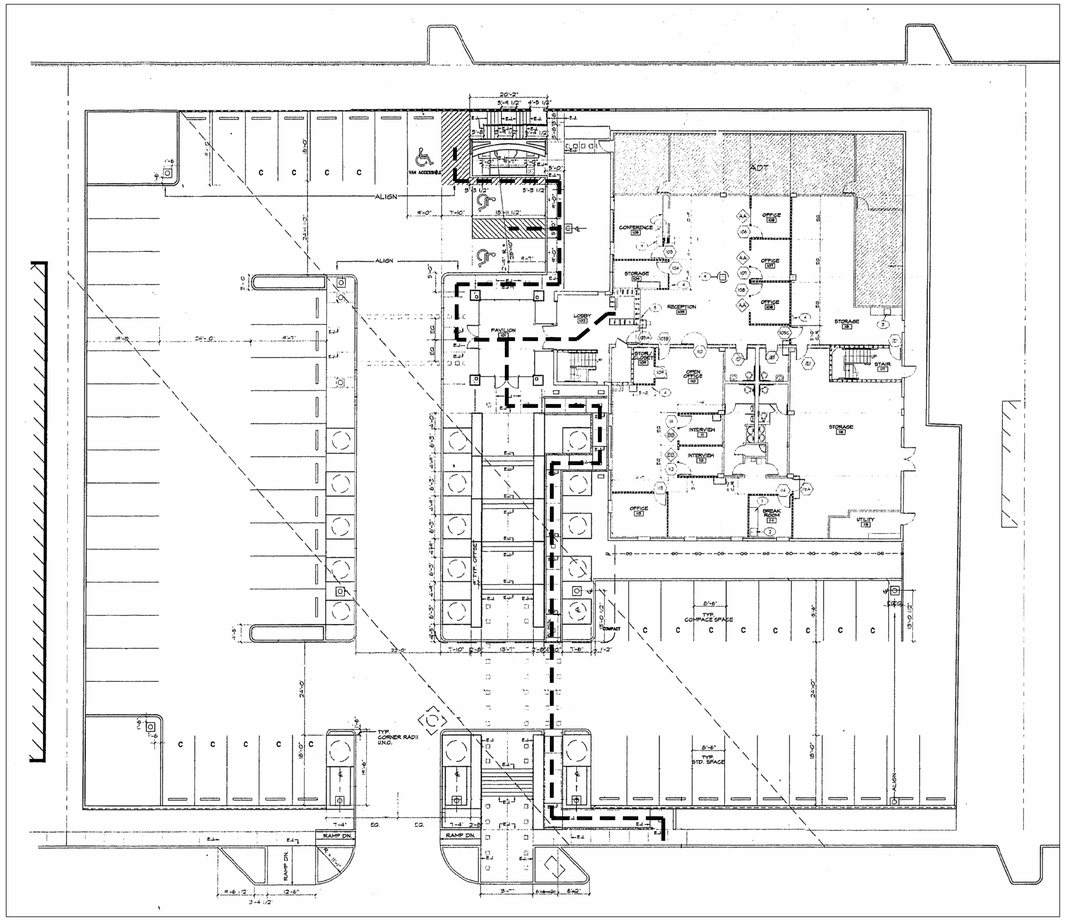

SITE PLAN
NOT TO SCALE

NOTE: ANY REQUIRED EXTERIOR ACCESSIBILITY IMPROVEMENT AND SITE WORK SHALL BE PERFORMED BY THE CITY OF DALY CITY.

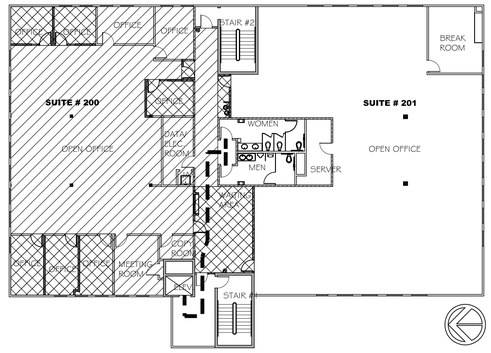

SECOND FLOOR LOCATOR PLAN
NOT TO SCALE

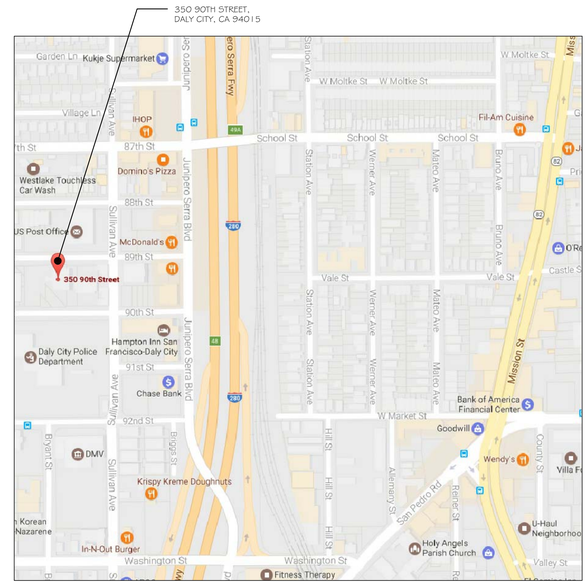

VICINITY MAP
NOT TO SCALE

PROJECT AREA

AREA OF WORK

ACCESSIBLE PATH OF TRAVEL

GENERAL INFORMATION

EXISTING BUILDING CONSTRUCTION:	ASSUMED TYPE V-N, 3-STORY BUILDING, FULLY SPRINKLERED
OCCUPANCY OF BUILDING:	B, OFFICE
DESCRIPTION OF USE:	B, OFFICE, NO CHANGE IN USE
DESCRIPTION OF WORK:	T.I. - REMOVE EXISTING NON-BEARING WALLS, DOOR AND T-BAR CEILING; BUILD NEW NON-BEARING WALLS; PROVIDE NEW DOORS/FRAMES/SIDELIGHTS AND TRANSACTION COUNTER/WINDOW WITH ROLL-UP DOOR; PROVIDE NEW T-BAR CEILING; PROVIDE NEW AND RELOCATE EXISTING LIGHT FIXTURES; MODIFY PLUMBING; ADD NEW POWER AND DATA OUTLETS/J-BOXES.
PROJECT AREA:	APPROX. 4,172 SQ. FT.
AREA OF WORK:	APPROX. 1,195 SQ. FT.
LIGHTING COMPLIANCE:	SEE ELECTRICAL DRAWINGS.
TOTAL:	ARCHITECTURAL SHEET A1 - TITLE SHEET SHEET A2 - CONSTRUCTION PLANS SHEET A3 - ENLARGED PLANS AND DETAILS MECHANICAL SHEET M-1 - MECHANICAL LEGEND, NOTES & SCHEDULE SHEET M-2 - MECHANICAL FLOOR PLANS PLUMBING SHEET P-1 - LEGEND & ABBREVIATIONS, SCHEDULES, NOTES & SPECIFICATIONS SHEET P-2 - DEMOLITION AND FLOOR PLANS ELECTRICAL SHEET E0.1 - GENERAL NOTES, LEGEND, ABBREVIATIONS AND DRAWING INDEX SHEET E0.2 - ELECTRICAL SPECIFICATION SHEET E0.3 - CERTIFICATE OF COMPLIANCE TITLE 24 SHEET E1.1 - LIGHTING PLAN SHEET E2.1 - POWER PLAN SHEET E3.1 - SINGLE LINE DIAGRAM, SCHEDULES AND DETAILS

GENERAL NOTES:

1. EXAMINATION OF SITE: CONTRACTOR SHALL THOROUGHLY EXAMINE SITE AND SATISFY HIMSELF AS TO THE CONDITIONS UNDER WHICH THE WORK IS TO BE PERFORMED, THE CONTRACTOR SHALL FIELD VERIFY AT THE SITE ALL MEASUREMENTS AFFECTING HIS WORK, AND SHALL BE RESPONSIBLE FOR THE CORRECTNESS OF SAME. NO EXTRA EXPENSE WILL BE ALLOWED FOR THE CONTRACTOR FOR EXPENSES DUE TO HIS NEGLECT TO EXAMINE, OR FAILURE TO DISCOVER, CONDITIONS WHICH AFFECT HIS WORK.
2. MEASUREMENTS: CONTRACTOR SHALL VERIFY ALL DIMENSIONS SHOWN ON THE DRAWINGS BY TAKING FIELD MEASUREMENTS; PROPER FIT AND ATTACHMENT OF ALL PARTS IS REQUIRED. BEFORE COMMENCING WORK, CHECK ALL LINES AND LEVELS INDICATED AND SUCH OTHER WORK AS BEEN PROPERLY COMPLETED. SHOULD THERE BE ANY DISCREPANCIES, IMMEDIATELY REPORT IN WRITING TO THE ARCHITECT FOR CORRECTION OR ADJUSTMENT PRIOR TO THE COMMENCEMENT OF ANY RELATED WORK. IN THE EVENT OF THE CONTRACTOR'S FAILURE TO DO SO, THE CONTRACTOR SHALL BE FULLY AND SOLELY RESPONSIBLE FOR THE CORRECTION OR ADJUSTMENT OF ANY SUCH RELATED WORK OR ERRORS.
3. INFORMATION GIVEN HEREIN AND ON THE DRAWINGS WAS OBTAINED FROM DATA AVAILABLE ARCHITECT AT THE TIME OF DESIGN, BUT ACCURACY CANNOT BE GUARANTEED. DRAWINGS AND SPECIFICATIONS ARE INTENDED FOR GUIDANCE, ACTUAL DIMENSIONS AND ELEVATIONS SHALL BE GOVERNED BY ACTUAL CONDITIONS ON THE SITE AND SHALL BE CHECKED BY THE CONTRACTOR.
4. RULES AND REGULATIONS: ALL WORK AND MATERIALS SHALL BE IN ACCORDANCE WITH THE LATEST ADOPTED RULES AND REGULATIONS OF THE LOCAL ENFORCING AGENCY AS FOLLOWS:
   - 2016 CALIFORNIA BUILDING CODE
   - 2016 CALIFORNIA PLUMBING CODE
   - 2016 CALIFORNIA MECHANICAL CODE
   - 2016 CALIFORNIA ELECTRICAL CODE
   - 2012 NFPA 101 LIFE SAFETY CODE
   - 2016 CALIFORNIA FIRE CODE
   - 2016 CALIFORNIA ENERGY CODE
   - ALL APPLICABLE STATE TITLE 24, AND ALL APPLICABLE LOCAL MUNICIPAL CODES & ORDINANCES.

   NOTHING ON THE DRAWINGS IS CONSTRUED TO PERMIT WORK NOT CONFORMING TO THESE CODES.
5. THE CONTRACTOR SHALL COORDINATE ALL WORK WITH THE MECHANICAL, ELECTRICAL, PLUMBING AND OTHER SUB TRADES, AND REPORT ANY CONFLICTS OR DISCREPANCIES TO THE ARCHITECT OR ENGINEER FOR CORRECTION OR ADJUSTMENT. NO ALLOWANCE WILL BE MADE FOR INCREASED COSTS INCURRED DUE TO LACK OF PROPER COORDINATION.
6. THE CONTRACTOR SHALL PROTECT AREA AND NEW OR EXISTING MATERIALS AND FINISHES FROM DAMAGE WHICH MAY OCCUR FROM CONSTRUCTION, DUST, WATER, ETC., AND SHALL PROVIDE AND MAINTAIN TEMPORARY BARRICADES, ETC., AS REQUIRED, TO PROTECT THE PUBLIC WORK AREAS DURING CONSTRUCTION. DAMAGE TO NEW AND EXISTING MATERIALS, FINISHES, STRUCTURES, ETC,,, SHALL BE REPAIRED OR REPLACED AT THE EXPENSE OF THE GENERAL CONTRACTOR AND TO THE SATISFACTION OF THE OWNER.
7. COORDINATE WITH ALL TRADES INVOLVED AND COMPARE COMPOSITE DRAWINGS TO ENSURE CLEARANCES FOR LIGHT FIXTURES, DUCTS, CEILINGS, ETC. AS NECESSARY TO MAINTAIN THE FINISH CEILING HEIGHT ABOVE THE FINISHED FLOOR SLAB AND CLEARANCES REQUIRED FOR LIGHT FIXTURES. CLARIFY ANY CONFLICTS WITH ARCHITECT.
8. PLUMBING, ELECTRICAL, MECHANICAL AND TITLE 24 PLANS TO BE PREPARED AND SUBMITTED FOR PERMIT REVIEW BY OTHERS.

FIRE/LIFE SAFETY NOTES:

1. FIRE SPRINKLER SYSTEM TO BE MODIFIED UNDER SEPARATE PERMIT IF REQUIRED.
2. FIRE LIFE SAFETY (FIRE ALARM) SYSTEM TO BE MODIFIED UNDER SEPARATE PERMIT IF REQUIRED.

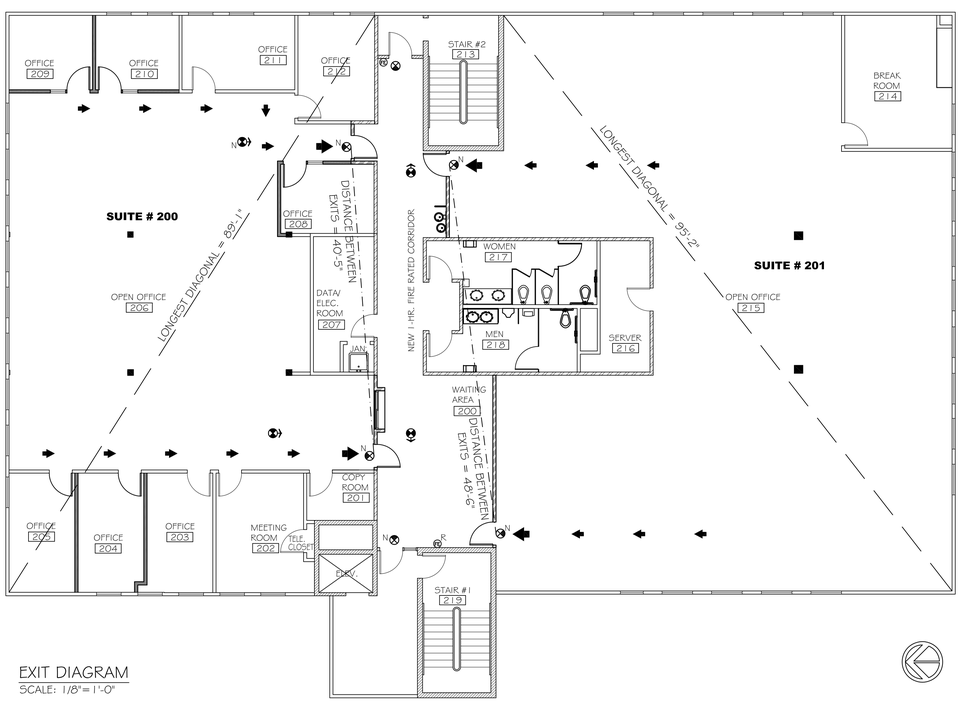

EXIT DIAGRAM
SCALE: 1/8"=1'-0"

LEGEND:

ILLUMINATED EXIT SIGN WITH BATTERY BACK-UP, DIRECTION OF TRAVEL AS INDICATED

INDICATES PATH OF TRAVEL

LONGEST DIAGONAL = 89'-1" (SUITE 200)
1/3 OF THE LONGEST DIAGONAL = 29'-8"

LONGEST DIAGONAL = 95'-2" (SUITE 201)
1/3 OF THE LONGEST DIAGONAL = 31'-9"

DISTANCE BETWEEN EXITS = 40'-5" (SUITE 200)

DISTANCE BETWEEN EXITS = 48'-6" (SUITE 201)

EXITING ANALYSIS - COMMON AREA				
ROOM NO.	USE	SQ. FT.	OCCUPANT LOAD FACTOR	OCCUPANT LOAD
200	WAITING AREA	333	15	23
207	DATA/ELEC. ROOM	139	300	1
			MAXIMUM OCCUPANT LOAD=	24

EXITING ANALYSIS - SUITE 200				
ROOM NO.	USE	SQ. FT.	OCCUPANT LOAD FACTOR	OCCUPANT LOAD
201	COPY ROOM	54	100	1
202	MEETING ROOM	184	15	13
203	OFFICE	135	100	2
204	OFFICE	132	100	2
205	OFFICE	133	100	2
206	OPEN OFFICE	2008	100	21
208	OFFICE	110	100	2
209	OFFICE	106	100	2
210	OFFICE	106	100	2
211	OFFICE	143	100	2
212	OFFICE	138	100	2
			MAXIMUM OCCUPANT LOAD=	51

EXITING ANALYSIS - SUITE 201				
ROOM NO.	USE	SQ. FT.	OCCUPANT LOAD FACTOR	OCCUPANT LOAD
214	BREAK ROOM	239	15	16
215	OPEN OFFICE	3892	100	39
216	SERVER	117	300	1
			MAXIMUM OCCUPANT LOAD=	56

TITLE SHEET

KRJ Design Group
650.525.3700
11 Twenty-fourth Ave.
San Mateo, CA 94403

BHRS NORTH COUNTY YOUTH TEAM
OFFICE REMODEL
350 90TH STREET
DALY CITY, CA
94015

PROPOSED PLAN REVIEWED & APPROVED	
DATE	
SCALE: AS NOTED	DRAWN BY: FV
DATE: 6/20/17	SQ. FT.: ± 4172 USF
FLOOR: SECOND	PROJ. NO.: KRJ350-90TH

REVISIONS

NO.	DATE/DESCRIPTION	BY
1	6/20/17 – ISSUE FOR REVIEW	FV

THIS CAD DOCUMENT IS PROPERTY OF KRJ DESIGN GROUP, LOCATED AT 11 TWENTY-FOURTH AVE., SAN MATEO, CA. THIS IS FOR KRJ INTERNAL USE ONLY. REMOVAL AND/OR DELETION OF THIS NOTICE IS PROHIBITED AND UNLAWFUL. WRITTEN PERMISSION TO DOCUMENT TO BE FOR INTERNAL USE ONLY UNLESS OTHERWISE STATED. THE INFORMATION HERE WAS GATHERED BY KRJ STAFF OR REPRESENTED TO BE CORRECT BY OWNER AND/OR AGENT. THE USE OF THIS DOCUMENT IS INTENDED FOR INTERNAL USE ONLY AS A REFERENCE DOCUMENT. THIS DOCUMENT IS NOT TO BE MODIFIED IN ANY WAY WITHOUT WRITTEN AUTHORIZATION FROM KRJ DESIGN GROUP OR ITS SUBSIDIARIES.

WE CANNOT ACCEPT RESPONSIBILITY FOR DIMENSIONS TAKEN FROM BLUEPRINTS SUPPLIED BY CLIENT/ARCHITECT.

ON SITE DIMENSIONS HAVE NOT BEEN TAKEN. VERIFICATION REQUIRED PRIOR TO BUILDOUT OR ORDER BY:

SHEET NO.
A1
1 OF 3 SHEETS

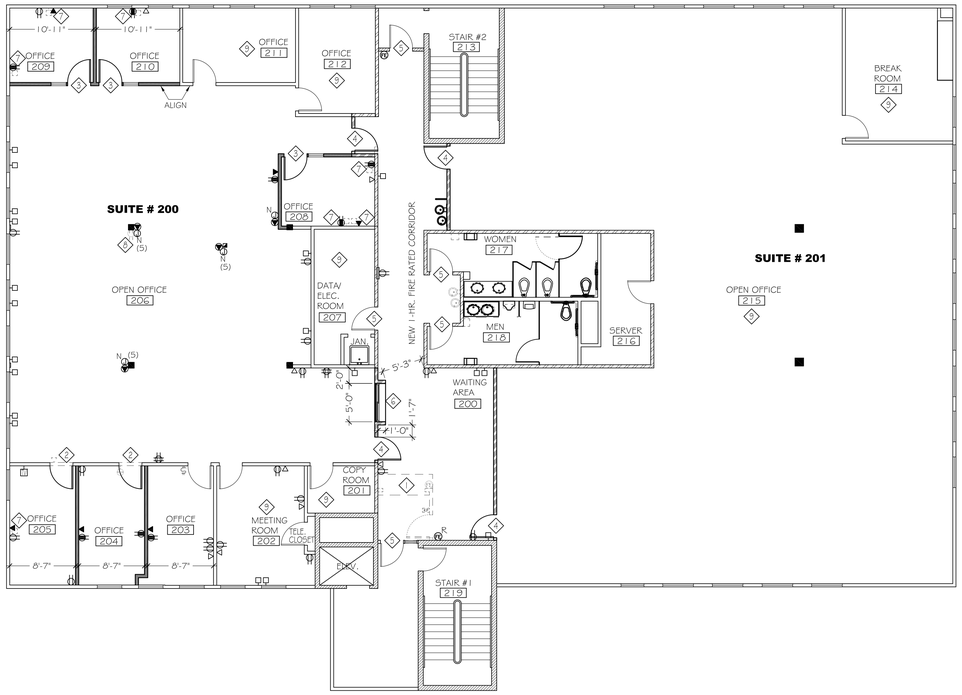

1 DEMO/PARTITION & ELECTRICAL PLAN
SCALE: 1/8"=1'-0"

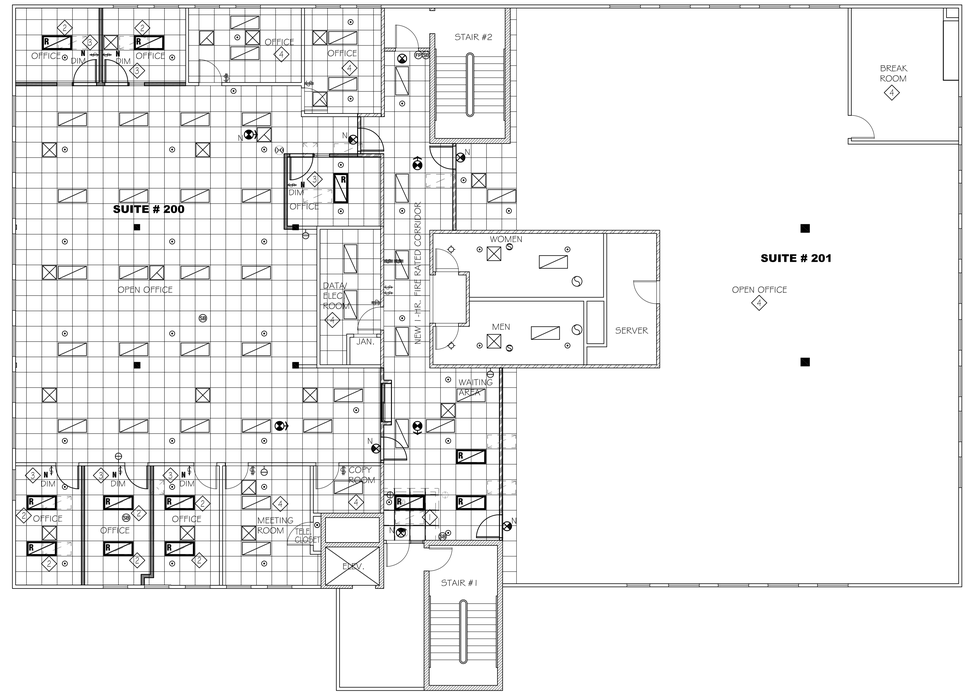

2 REFLECTED CEILING PLAN
SCALE: 1/8"=1'-0"

KRJ Design Group
650.525.3700
11 Twenty-fourth Ave.
San Mateo, CA 94403

BHRS NORTH COUNTY YOUTH TEAM
OFFICE REMODEL
350 90TH STREET
DALY CITY, CA
94015

LEGEND: PARTITION & ELECTRICAL

- EXISTING CONSTRUCTION TO REMAIN
- EXISTING CONSTRUCTION TO BE REMOVED
- NEW CEILING HEIGHT PARTITION WITH 3-5/8" 25 GA METAL STUDS @ 24" O.C. & 5/8" GYP. BD. ON EACH SIDE, WITH ACOUSTIC INSULATION
- EXISTING 1-HOUR FIRE-RATED PARTITION, V.I.F.
- EXISTING 1-HOUR FIRE-RATED SHEAR WALL. PROVIDE TYPE 'X' GYPSUM BOARD AT PORTION OF WALL ABOVE CEILING AS NEEDED.
- NEW 1-HOUR FIRE-RATED PARTITION TO STRUCTURE ABOVE, WITH 3-5/8" 20 GA METAL STUDS @ 24" O.C. & 5/8" TYPE X GYP. BD. ON EACH SIDE, W/ ACOUSTIC INSULATION
- EXISTING DUPLEX ELECTRICAL OUTLET
- EXISTING 4-PLEX ELECTRICAL OUTLET
- EXISTING DATA OUTLET
- EXISTING BLANK COVER PLATE
- EXISTING COAXIAL CABLE CONNECTION
- NEW DUPLEX ELECTRICAL OUTLET. (D) INDICATES DEDICATED CIRCUIT. (+) INDICATES MOUNTING HEIGHT
- NEW COMMUNICATION OUTLET, RING AND STRING. (+) INDICATES MOUNTING HEIGHT.
- NEW ELECTRICAL J-BOX, HARDWIRE TO SYSTEM FURNITURE BASEFEED. (#) INDICATES NUMBER OF WORKSTATIONS SERVED.
- NEW COMMUNICATION J-BOX FOR PANEL BASEFEED, RING & STRING
- NEW POWER POLE
- REMOVAL/RELOCATION OF EXISTING OUTLETS, J-BOX, ETC. CAP OR PATCH WALL OPENING AS REQUIRED
- REMOVAL OF EXISTING KEYPAD
- EXISTING FIRE EXTINGUISHER. (R) INDICATES RELOCATED
- EXISTING ELECTRICAL PANEL
- KEY TO SHEET NOTES

GENERAL CONSTRUCTION NOTES: DEMO, PARTITION & ELECTRICAL

1. ALL DIMENSIONS SHOWN ARE CLEAR DIMENSIONS BETWEEN FINISHED WALL SURFACES, UNLESS OTHERWISE NOTED (℄) TO CENTER LINE.
2. PATCH & REPAIR ALL SURFACES WHERE REMOVAL OCCURS AS NECESSARY TO MATCH EXISTING ADJACENT SURFACE.
3. EXIT DOORS SHALL BE OPENABLE FROM INSIDE WITHOUT USE OF A KEY OR ANY SPECIAL KNOWLEDGE OR EFFORT PER CODE.
4. OPERABLE PARTS OF ACCESSIBLE HARDWARE SHALL BE 34" MIN. AND 44" MAX. ABOVE THE FINISH FLOOR.
5. HAND-ACTIVATED DOOR OPENING HARDWARE, HANDLES, PULLS, LATCHES, LOCKS AND OTHER OPERATING DEVICES ON ACCESSIBLE DOORS SHALL HAVE A SHAPE THAT IS EASY TO GRASP WITH ONE HAND AND DOES NOT REQUIRE TIGHT GRASPING, TIGHT PINCHING OR TWISTING OF THE WRIST TO OPERATE. LATCHING AND LOCKING DOORS THAT ARE HAND-ACTIVATED AND WHICH ARE IN A PATH OF TRAVEL SHALL BE OPERABLE WITH A SINGLE EFFORT BY LEVER-TYPE HARDWARE, PANIC BARS, PUSH-PULL ACTIVATING BARS OR OTHER HARDWARE DESIGNED TO PROVIDE PASSAGE. (IF REQUIRED, ALL LOCK SETS SHALL BE SCHLAGE LARGE FORMAT IC CORE AND ALL PANIC BARS SHALL BE VON DUPRIN 99 SERIES. CONFIRM WITH OWNER.) 2
6. THE BOTTOM 10" OF THE DOOR SHALL HAVE A SMOOTH, UNINTERRUPTED SURFACE TO ALLOW THE DOOR TO BE OPENED BY A WHEELCHAIR FOOTREST WITHOUT CREATING A TRAP OR HAZARDOUS CONDITION.
7. IF DOOR HAS A CLOSER, THE SWEEP PERIOD OF THE CLOSER SHALL BE ADJUSTED SO THAT FROM AN OPENING POSITION OF 90 DEGREES TO 12 DEGREES FROM THE LATCH IS 5 SECONDS MINIMUM.
8. DOORS AND OPENINGS IN 1-HR CORRIDOR WALLS (E.G. EXISTING ELECTRICAL ROOM) SHALL BE PROTECTED BY TIGHT FITTING SMOKE & DRAFT ASSEMBLIES HAVING A FIRE PROTECTION RATING OF NOT LESS THAN 20-MINUTE FIRE ASSEMBLY WITH SELF-CLOSER PER CODE. MAX. EFFORT TO OPERATE FIRE RATED DOOR SHALL BE 15 LBS.
9. PROVIDE ADA TACTILE EGRESS SIGNAGE AT SUITE ENTRY/EXIT DOORS IF NOT ALREADY EXISTING.
10. ANY PENETRATION TO FIRE RESISTIVE ASSEMBLIES SHALL COMPLY WITH CHAPTER 7 OF 2016 C.B.C., INCLUDING BUT NOT LIMITED TO THE FOLLOWING:
    (a) ELECTRICAL CONDUCTORS SHALL BE IN RIDGED STEEL CONDUIT OR ELECTRICAL METAL TUBING (EMT). ELECTRICAL COMPONENTS SHALL BE UL LISTED AND LABELED.
    (b) PROVIDE SMOKE/FIRE DAMPERS NOT LESS THAN CLASS II, 250 DEGREE FAHRENHEIT WITH APPROVED RECOGNIZED STANDARDS TO BE ACTUATED BY SMOKE DETECTION SYSTEM CONNECTED TO THE EXISTING BUILDING FIRE ALARM SYSTEM.
    (c) ALL INTERIOR PLUMBING PIPING TO BE COPPER.
    (d) SEAL ALL GAPS WITH APPROVED FIRE CAULKING.
11. ALL NEW RECEPTACLES SHALL BE MOUNTED MINIMUM 15" A.F.F. (MEASURED FROM THE BOTTOM OF THE OUTLET BOX) PER ELECTRICAL CODE, UNLESS OTHERWISE NOTED. RECEPTACLES INSTALLED WITHIN 6 FEET OF THE OUTSIDE EDGE OF THE SINK SHALL HAVE GROUND-FAULT CIRCUIT-INTERRUPTER PROTECTION FOR PERSONNEL.
12. MAXIMUM FORCE TO PUSH OR PULL OPEN INTERIOR AND EXTERIOR DOORS (OTHER THAN FIRE DOORS) SHALL BE 5 LBF, AND 15 LBF FOR FIRE DOORS.
13. PROVIDE WALL MOUNTED PORTABLE FIRE EXTINGUISHERS (MIN. 2A-10BC RATING) WITHIN 75'-0" OF ANY POINT IN THE BUILDING. LOCATION SHALL BE APPROVED BY FIRE DEPARTMENT. ADDITIONAL MAY BE REQUIRED AS DETERMINED BY THE INSPECTOR.
14. FLOORING CONTRACTOR SHALL CHECK FOR ANY FLOOR LEVELING ISSUES, AND ALLOW FOR FLOATING, GRINDING, OR FILLING AS NECESSARY TO PROVIDE LEVELED SUB-FLOOR FOR NEW FLOORING INSTALLATION.
15. THRESHOLDS/TRANSITIONS, IF PROVIDED, SHALL BE 1/2" HIGH MAX. CHANGE IN LEVEL OF 1/4" MAX. SHALL BE PERMITTED TO BE VERTICAL. CHANGE IN LEVEL BETWEEN 1/4" AND 1/2" SHALL BE BEVELED WITH 1:2 MAX. SLOPE.
16. VERTICAL CLEARANCE SHALL BE 80" HIGH MINIMUM. DOOR CLOSERS AND STOPS SHALL BE PERMITTED TO BE 70" MINIMUM ABOVE THE FINISH FLOOR OR GROUND.
17. EXISTING BUILDING POST-TENSION FLOOR SLAB REQUIRES SCANNING BY DIGITAL SCAN FOR FLOOR SLAB PENETRATION, INCLUDING SMOOTING WALL BOTTOM TRACKS.
18. PROVIDE WALL PAINT THROUGHOUT PROJECT AREA (SUITE 200 & NEW CORRIDOR/ WAITING AREA) SHERWIN WILLIAMS "AESTHETIC WHITE" SW7035. ALLOW FOR ACCENT PAINT ON 20% OF THE WALLS SHERWIN WILLIAMS "TONY TAUPE" SW7038 AND "COPPER MOUNTAIN" SW6356. EXACT LOCATIONS TO BE DETERMINED. 4
19. REMOVE EXISTING AND PROVIDE NEW CARPET AND RUBBER BASE THROUGHOUT PROJECT AREA (SUITE 200 & NEW CORRIDOR/WAITING AREA). CARPET SHALL BE SHAW CONTRACT - MIRROR IMAGE TILE 59466 SHADOW 63761. RUBBER BASE SHALL BE BURKE "ORIGE" 317. 2

CONSTRUCTION SHEET NOTES: DEMO, PARTITION & ELECTRICAL

1. DEMOLISH EXISTING COUNTER, WALL ENCLOSURE AND DOOR. PATCH EXISTING CARPET UNDERNEATH AS NEEDED. ALTERNATELY, PROVIDE NEW CARPET THROUGHOUT. RELOCATE EXISTING FIRE EXTINGUISHER AS SHOWN. SEE REFLECTED CEILING PLAN FOR CEILING WORK AT THIS AREA.
2. DEMOLISH PORTION OF EXISTING WALLS AS REQUIRED TO PROVIDE NEW 3'-0"W x ±6'-8"H WOOD DOOR AND H.M. FRAME TO MATCH EXISTING. PROVIDE ADA APPROVED LEVER HARDWARE AND LATCHSET TO MATCH EXISTING.
3. PROVIDE NEW 3'-0"W x ±6'-8"H WOOD DOOR WITH H.M. FRAME AND INTEGRAL 24"W SIDELIGHT WITH TEMPERED GLASS, AND ADA APPROVED LEVER HARDWARE AND LATCHSET TO MATCH EXISTING.
4. PROVIDE NEW 20-MIN. FIRE RATED DOOR & ASSEMBLY, H.M. FRAME, CLOSER, GASKET, ADA APPROVED LEVER HARDWARE. PROVIDE ELECTRICAL CONNECTION FOR CARD KEY ACCESS BY OTHERS.
5. EXISTING 20-MIN. FIRE RATED DOOR & ASSEMBLY, VERIFY IN FIELD, MODIFY AS REQUIRED.
6. PROVIDE NEW ±5'-0"L x ±4'-0"H TRANSACTION WINDOW WITH DOUBLE SLIDING WINDOW ASSEMBLY WITH TEMPERED GLASS, WITH +2'-10" HIGH COUNTER. PROVIDE FIRE-RATED ROLL-UP COUNTER DOOR. SEE DETAILS.
7. CONVERT EXISTING BLANK COVER PLATES TO NEW ELECTRICAL DUPLEX OUTLETS OR DATA RING & STRING AS SHOWN.
8. VERIFY IF EXISTING DUPLEX OUTLET MAY BE CONVERTED TO NEW ELECTRICAL J-BOX TO HARDWIRE TO SYSTEM FURNITURE BASEFEED. IF NOT, RETAIN EXISTING DUPLEX OUTLET AND PROVIDE NEW ELECTRICAL J-BOX. SEE ELECTRICAL PLANS AND COORDINATE WITH ELECTRICAL ENGINEER. 2
9. NO WORK THIS AREA.

NOTE: FLOOR-CEILING TRACKS, STUDS & JOINTS SHALL BE CEMCO STEEL FRAMING, ASTM C645, OR APPROVED EQUAL.

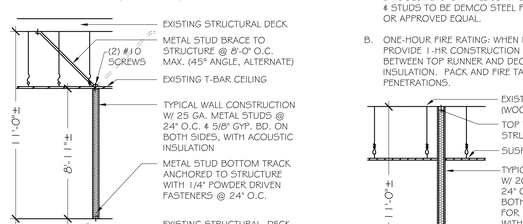

3 SECTION: FULL HT. PARTITION TO CEILING GRID
SCALE: 1/4" = 1'-0"

LEGEND: PARTITION & ELECTRICAL

- EXISTING 2'X4' RECESSED FLUORESCENT LIGHT FIXTURE
- REMOVAL/RELOCATION OF EXISTING 2'X4' RECESSED FLUORESCENT LIGHT FIXTURE
- RELOCATED 2'X4' RECESSED FLUORESCENT LIGHT FIXTURE
- EXISTING RECESSED DOWNLIGHT
- EXISTING LIGHT SWITCHES
- EXISTING DUAL LIGHT SWITCH
- DIM NEW LIGHT SWITCH WITH DIMMER AND MANUAL OVERRIDE
- EXISTING SENSOR
- EXISTING SUPPLY AIR FIXTURE
- EXISTING RETURN AIR
- EXISTING EXHAUST FAN
- EXISTING SPRINKLER
- EXISTING ILLUMINATED EXIT SIGNS WITH BATTERY BACK-UP. DIRECTION OF TRAVEL & ILLUMINATED FACE AS INDICATED. (N) INDICATES RELOCATED OR NEW
- REMOVAL/RELOCATION OF EXISTING EXIT SIGNS
- EXISTING STROBE LIGHT
- EXISTING THERMOSTAT
- KEY TO SHEET NOTES

GENERAL CONSTRUCTION NOTES: REFLECTED CEILING

1. CLEAN, REPAIR OR REPLACE DAMAGED T-BAR SPINE AT AREA OF CONSTRUCTION.
2. REPLACE DAMAGED OR STAINED CEILING TILES AS NEEDED.
3. PROVIDE SEISMIC BRACING AND COMPRESSION STRUTS (12' O.C. IN BOTH DIRECTIONS STARTING 6' FROM WALLS) AS REQUIRED PER CODE IF NOT ALREADY EXISTING.
4. PROVIDE FOR ALL LIGHT FIXTURES TO BE IN GOOD WORKING ORDER.
5. PROVIDE REQUIRED TIE WIRE SUPPORTS FOR ALL NEW OR RELOCATED LIGHT FIXTURES.
6. PROVIDE EGRESS ILLUMINATION LEVEL NOT LESS THAN ONE FOOT-CANDLE AT THE WALKING SURFACE PER 2016 CBC 1006.2. EMERGENCY LIGHTING SHALL BE ARRANGED TO PROVIDE INITIAL ILLUMINATION THAT IS AT LEAST AN AVERAGE OF 1 FOOT-CANDLE AND A MINIMUM AT ANY POINT OF 0.1 FOOT-CANDLE MEASURED ALONG THE PATH OF EGRESS AT FLOOR LEVEL, PER CBC 1006.3.1.
7. PROVIDE NEW LIGHT SWITCHES AS SHOWN TO BE MOUNTED MIN. 3'-0" A.F.F. TO MAX. 4'-0" A.F.F. MEASURED FROM THE TOP OF THE OUTLET BOX. PROVIDE NEW OR RELOCATE/REWIRE EXISTING OCCUPANCY SENSORS AS REQUIRED FOR PROPER LIGHTING CONTROL. REWIRE LIGHT FIXTURES THROUGHOUT AS REQUIRED FOR PROPER SWITCHING CONTROL.
8. THE HVAC FIXTURE LOCATIONS SHOWN ARE EXISTING LOCATIONS FOR REFERENCE ONLY. CONTRACTOR SHALL VERIFY, ADJUST HVAC FIXTURE LOCATIONS AND REZONE HVAC AS NECESSARY TO COMPLY WITH CODE & REGULATIONS AND SHALL COMFORT BALANCE ENTIRE HVAC SYSTEM. CONTRACTOR SHALL ADJUST & RELOCATE THERMOSTATS WHERE APPROPRIATE AND CONFIRM LOCATION WITH LANDLORD & TENANT PRIOR TO INSTALLATION FOR ANY CONFLICT.
9. THE SPRINKLER HEAD LOCATIONS SHOWN ARE EXISTING LOCATIONS FOR REFERENCE ONLY. CONTRACTOR SHALL VERIFY, ADJUST SPRINKLER HEAD LOCATIONS (SPACING AND/OR HEIGHT) AS NECESSARY TO COMPLY WITH CODE & REGULATIONS.
10. FIRE EXINGUISHERS, EXIT SIGNS, & EMERGENCY LIGHTING TO COMPLY WITH CURRENT CODE.
11. CONTRACTOR TO PROVIDE ALL NECESSARY CEILING HORNS, STROBES, SIGNALING DEVICES, EXIT SIGNS, EMERGENCY LIGHTING, ETC. AS NEEDED AND APPLICABLE TO THE BUILDING PER FIRE/LIFE SAFETY.

CONSTRUCTION SHEET NOTES: REFLECTED CEILING PLAN

1. DEMOLISH EXISTING +8'-4"H ACOUSTIC CEILING GRID/TILES. PROVIDE NEW ACOUSTIC CEILING GRID/TILE TO MATCH, ALIGN AND TIE INTO EXISTING AT WAITING AREA AND CORRIDOR. REMOVE AND REINSTALL EXIT SIGN AND LIGHT FIXTURE.
2. REPLACE EXISTING LIGHT FIXTURE BALLASTS IN THESE ROOMS WITH NEW DIMMABLE ELECTRONIC BALLASTS FOR MULTI-LEVEL LIGHTING. SEE ELECTRICAL DRAWINGS FOR SPECIFICATIONS AND DETAILED INFORMATION.
3. PROVIDE OCCUPANCY SENSORS FOR PROPER LIGHTING CONTROL. SEE ELECTRICAL DRAWINGS FOR SPECIFICATIONS AND DETAILED INFORMATION.
4. NO WORK THIS AREA.

NOTES:

A. TOP TRACK TO BE SLIPTRACK BY CEMCO STEEL, TESTED IN ACCORDANCE WITH UL 2079 &/OR ASTM E-1966, HEAD OF WALL JOINT SYSTEM. FLOOR TRACK & STUDS TO BE DEMCO STEEL FRAMING, ASTM C645, OR APPROVED EQUAL.

B. ONE-HOUR FIRE RATING: WHEN INDICATED ON PLAN, PROVIDE 1-HR CONSTRUCTION BY PACKING VOIDS BETWEEN TOP RUNNER AND DECK WITH FIRE SAVING INSULATION. PACK AND FIRE TAPE ALL WALL PENETRATIONS.

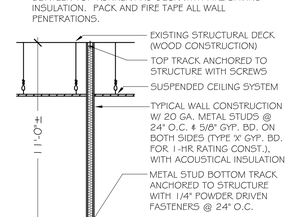

4 FULL HT. PARTITION TO UNDER SIDE OF STRUCTURE
SCALE: 1/4" = 1'-0"

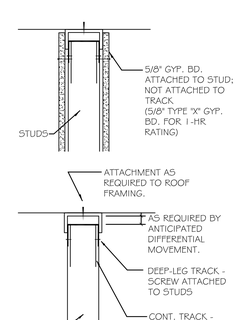

ENLARGED TOP CONNECTION DETAIL
NOT TO SCALE

ALLOWABLE HEIGHTS FOR NON-BEARING CURTAIN WALLS

"DS25 -- 25 Gauge -- PUNCHED "C" STUDS

DEFLECTION SPACING		L/120			L/240			L/360	
SECTION DESIGNATION	In. DEFLECTION	12"	16"	24"	12"	16"	24"	12"	16"	24"
		SURFACE-LOAD δ LBS. PER SQUARE FOOT - INTERIOR								
162DS25	0.034	9'8"	8'9"	7'7"	7'11"	7'2"	6'2"	6'11"	6'4"	5'6"
250DS25	0.091	13'4"	12'1"	10'4"	10'10"	9'9"	8'6"	9'7"	8'8"	7'6"
350DS25	0.198	17'3"	15'4"	12'6"	13'11"	12'7"	11'0"	12'4"	11'3"	9'8"
362DS25	0.216	17'9"	15'7"	12'9"	14'4"	12'11"	11'4"	12'8"	11'6"	10'0"
400DS25	0.271	18'11"	16'4"	13'4"	15'5"	14'0"	12'2"	13'9"	12'5"	10'9"

"DS20 -- 20 Gauge -- PUNCHED "C" STUDS

DEFLECTION SPACING		L/120			L/240			L/360	
SECTION DESIGNATION	In. DEFLECTION	12"	16"	24"	12"	16"	24"	12"	16"	24"
		SURFACE-LOAD δ LBS. PER SQUARE FOOT - INTERIOR								
162DS20	0.072	12'2"	11'0"	9'7"	9'8"	8'9"	7'8"	8'5"	7'8"	6'8"
250DS20	0.177	16'9"	15'2"	13'3"	13'4"	12'1"	10'7"	11'8"	10'7"	9'3"
350DS20	0.386	21'8"	19'8"	17'2"	17'3"	15'8"	13'8"	15'1"	13'8"	12'0"
362DS20	0.419	22'5"	20'3"	17'8"	17'9"	16'1"	14'1"	15'6"	14'1"	12'4"
400DS20	0.528	24'1"	21'10"	19'1"	19'3"	17'5"	15'3"	16'9"	15'3"	13'4"
550DS20	1.153	31'0"	28'2"	24'7"	24'9"	22'6"	19'7"	21'7"	19'7"	17'2"
600DS20	1.403	33'3"	30'3"	26'5"	26'6"	24'1"	21'1"	23'2"	21'1"	18'5"
800DS20	2.853	42'3"	37'9"	30'10"	33'8"	30'7"	26'8"	29'5"	26'9"	23'4"

CONSTRUCTION PLANS

PROPOSED PLAN REVIEWED & APPROVED	
DATE	
SCALE: AS NOTED	DRAWN BY: FV
DATE: 6/20/17	SQ. FT.: ± 4172 USF
FLOOR: SECOND	PROJ. NO.: KRJ350-90TH

REVISIONS

NO.	DATE/DESCRIPTION	BY
1	6/20/17 – ISSUE FOR REVIEW	FV
2	6/22/17 – UPDATED FOR FINISHES & PER ELEC. ENGR.	FV
3	7/19/17 – UPDATED PER LANDLORD COMMENTS	FV

THIS CAD DOCUMENT IS PROPERTY OF KRJ DESIGN GROUP, LOCATED AT 11 TWENTY-FOURTH AVE., SAN MATEO, CA. THIS IS FOR KRJ INTERNAL USE ONLY. REMOVAL AND/OR DELETION OF THIS NOTICE IS PROHIBITED AND UNLAWFUL. KRJ REPRESENTS THIS DOCUMENT TO BE FOR INTERNAL USE ONLY UNLESS OTHERWISE SPECIFIED. THE INFORMATION HERE WAS GATHERED BY KRJ STAFF OR REPRESENTED TO BE CORRECT BY OWNER AND/OR AGENT. THE USE OF THIS DOCUMENT IS INTENDED FOR INTERNAL USE ONLY AS A REFERENCE DOCUMENT. THIS DOCUMENT IS NOT TO BE MODIFIED IN ANY WAY WITHOUT WRITTEN AUTHORIZATION FROM KRJ DESIGN GROUP OR ITS SUBSIDIARIES.

WE CANNOT ACCEPT RESPONSIBILITY FOR DIMENSIONS TAKEN FROM BLUEPRINTS SUPPLIED BY CLIENT/ARCHITECT.

ON SITE DIMENSIONS HAVE NOT BEEN TAKEN. VERIFICATION REQUIRED PRIOR TO BUILDOUT OR ORDER BY:

SHEET NO. A2

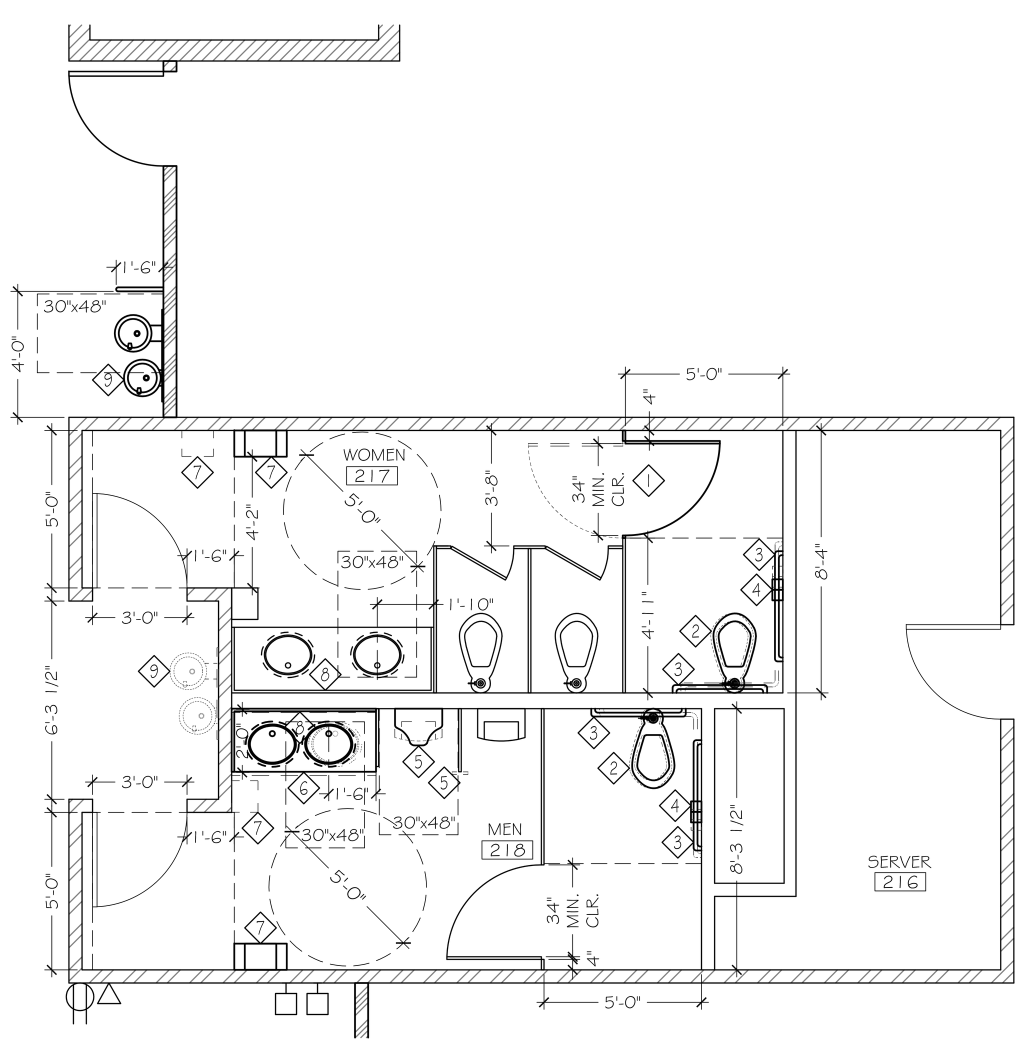

1 ENLARGED RESTROOM PLANS
SCALE: 1/4"= 1'-0"

CONSTRUCTION SHEET NOTES: ACCESSIBILITY UPGRADE WORK

1. REMOVE EXISTING TOILET STALL DOOR & ASSOCIATED PANELS, AND PROVIDE NEW 36"W DOOR & PANELS (OR REINSTALL EXISTING) SO AS TO REVERSE DOOR SWING TO PROVIDE PULL SIDE DOOR CLEARANCE, FOR DOOR TO BE MAXIMUM 4" FROM ADJACENT WALL. VERIFY 59" (4'-11") MINIMUM CLEARANCE FROM DOOR TO REAR WALL BEHIND TOILET.
2. ADJUST LOCATION OF TOILET TO BE 17" TO 18" FROM ADJACENT WALL.
3. REMOVE EXISTING L-SHAPED GRAB BAR AND PROVIDE NEW GRAB BARS PER DETAIL 5/A3 TO ACHIEVE REQUIRED DIMENSIONS OF 36" GRAB BAR RELATIVE TO TOILET LOCATION.
4. REMOVE AND RELOCATED TOILET TISSUE DISPENSER SO AS TO BE 7"-9" FROM EDGE OF TOILET (SEE DETAIL 5/A3). REMOVE LARGE TOILET TISSUE DISPENSER ABOVE GRAB BAR TO PROVIDE REQUIRED 12" MINIMUM CLEARANCE ABOVE GRAB BARS.
5. REPLACE EXISTING URINAL WITH NEW ADA-COMPLIANT URINAL PER DETAIL 6/A3. MODIFY EXISTING OR PROVIDE NEW WALL-MOUNTED URINAL SCREENS TO ALLOW 30" CLEAR WIDTH WITH 24" MAXIMUM ALCOVE DEPTH. BOTTOM OF NEW URINAL SCREEN SHALL BE 12" MAX. FROM FLOOR, AND TOP SHALL BE 60" MIN. FROM FLOOR. URINAL SCREEN SHALL EXTEND 18" MIN. FROM WALL, OR TO A POINT NOT LESS THAN 6" BEYOND OUTERMOST FRONT LIP OF URINAL, WHICHEVER IS GREATER.
6. REMOVE AND RELOCATE EXISTING LAVATORY SO AS TO BE 18" FROM ADJACENT URINAL PARTITION. MODIFY OR REPLACE EXISTING COUNTER WITH NEW 24" DEEP COUNTER AS NEEDED. REINSTALL OTHER LAVATORY AS REQUIRED, AND COORDINATE WITH MECHANICAL ENGINEER ON REQUIRED FIXTURE CLEARANCES FROM ADJACENT FIXTURES OR WALL.
7. RELOCATE EXISTING PAPER TOWEL DISPENSERS AS SHOWN, AND PROVIDE PERMANENTLY PLACED WASTE RECEPTACLE UNDERNEATH TO PREVENT PROTRUSION HAZARD. DEPTH OF WASTE RECEPTACLE SHALL BE LESS THAN OR EQUAL TO DISPENSER DEPTH.
8. REMOVE AND REINSTALL MIRROR SO AS TO BE +40" MAXIMUM FROM FINISHED FLOOR TO BOTTOM OF MIRROR REFLECTING SURFACE PER DETAIL 3/A3.
9. REMOVE EXISTING DRINKING FOUNTAIN WHICH ENCROACHES INTO RESTROOM DOOR CLEAR MANEUVERING SPACE. REINSTALL AT NEW LOCATION AS SHOWN. PROVIDE NEW PLUMBING AS REQUIRED. PROVIDE PEDESTRIAN PROTECTION BARRIER TO PROJECT HORIZONTALLY AT LEAST AS FAR AS THE DRINKING FOUNTAIN AND TO WITHIN 6" VERTICALLY FROM THE FLOOR OR GROUND SURFACE.
10. REPAIR/REPLACE ALL SURFACES/FINISHES (FLOOR TILES, WALL TILES, PAINT, ETC.) DAMAGED OR AFFECTED BY THE DEMOLITION AND CONSTRUCTION WORK AS NECESSARY TO MATCH EXISTING ADJACENT SURFACES/FINISHES.

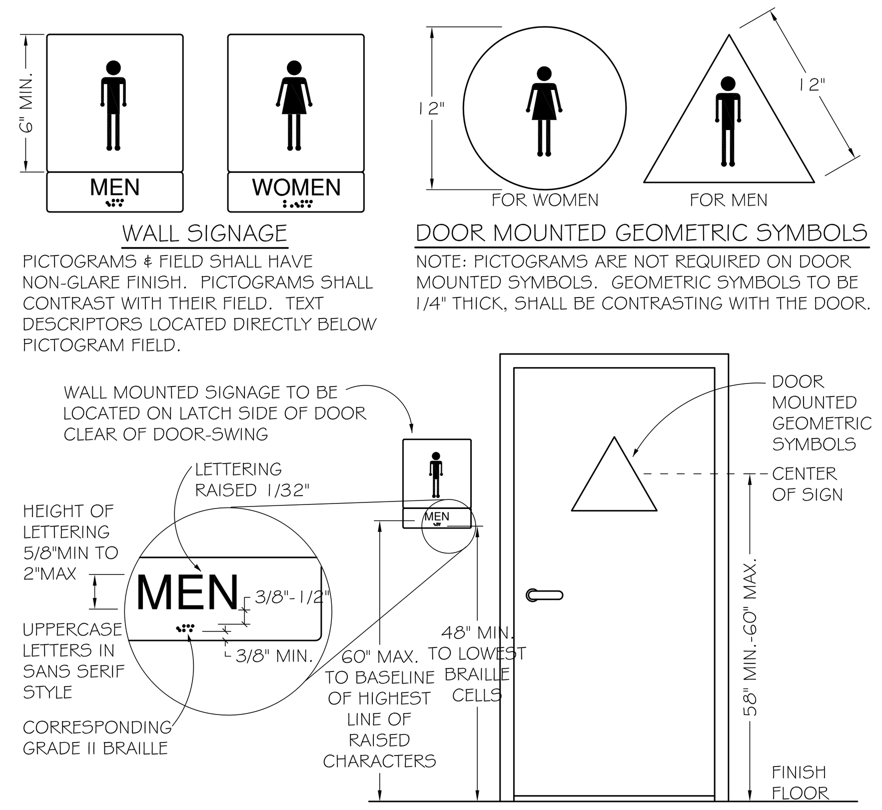

2 RESTROOM SIGNAGE
NOT TO SCALE

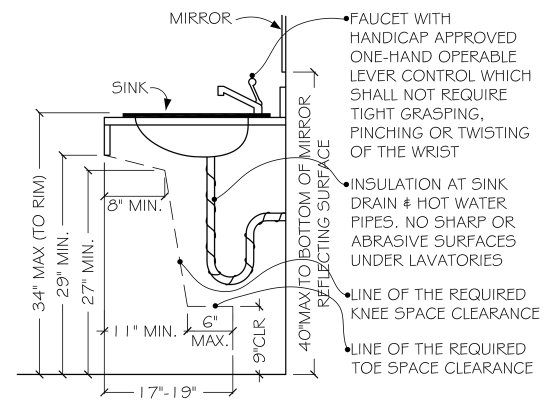

3 SECTION: ACCESSIBLE LAVATORY COUNTER
NOT TO SCALE

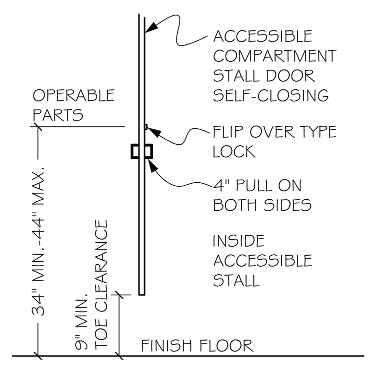

4 SIDE VIEW: ACCESSIBLE COMPART. DOOR
NOT TO SCALE

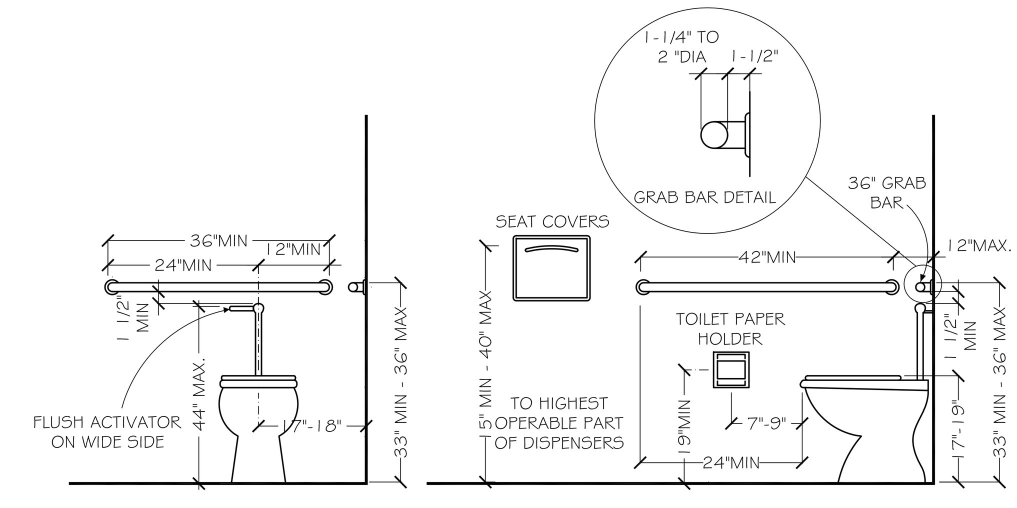

5 ELEVATIONS: ACCESSIBLE FIXTURES
NOT TO SCALE

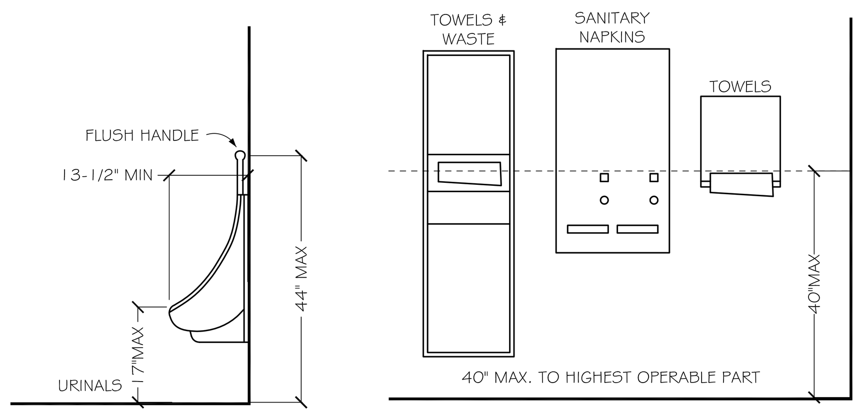

6 ELEVATIONS: ACCESSIBLE FIXTURES
NOT TO SCALE

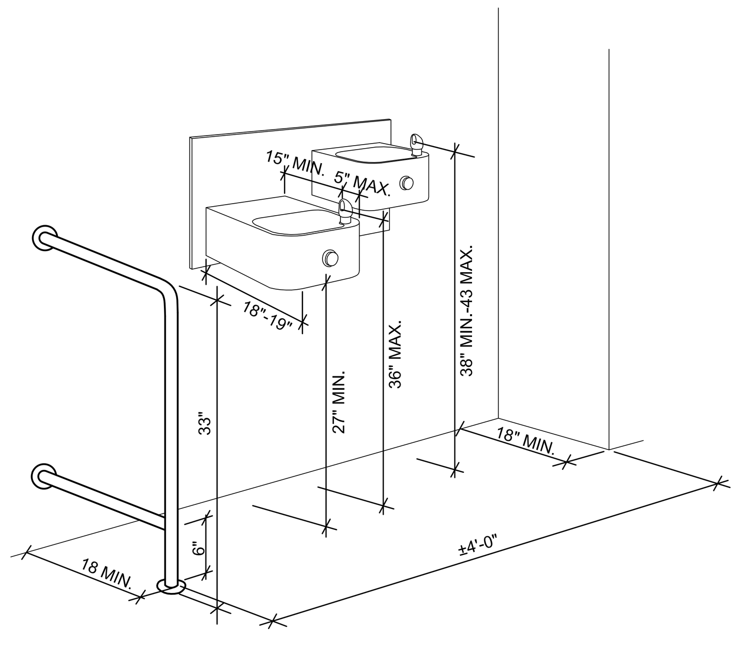

7 DETAIL: TYPICAL ACCESSIBLE DRINKING FOUNTAIN
NOT TO SCALE

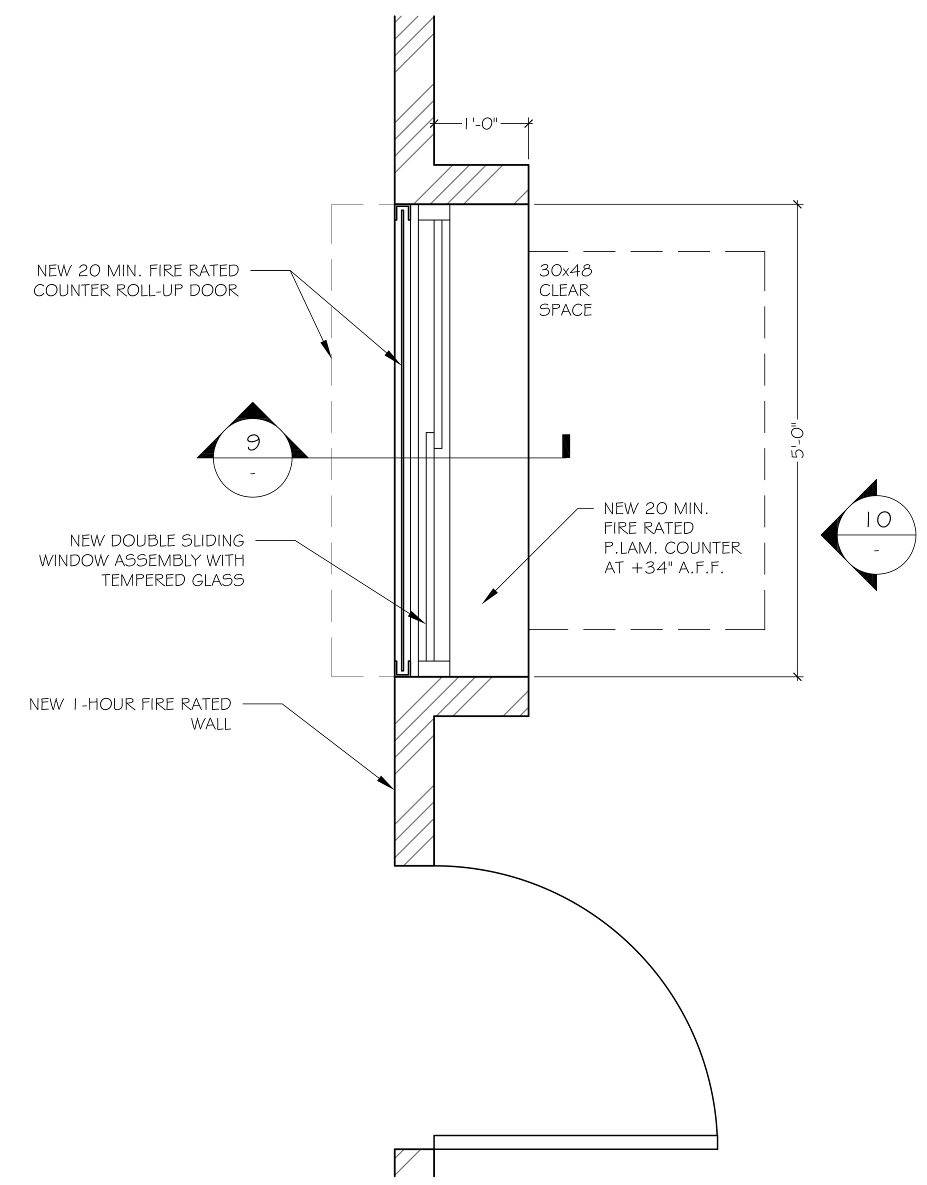

8 ENLARGED LOBBY COUNTER PLAN
SCALE: 3/4" = 1'-0"

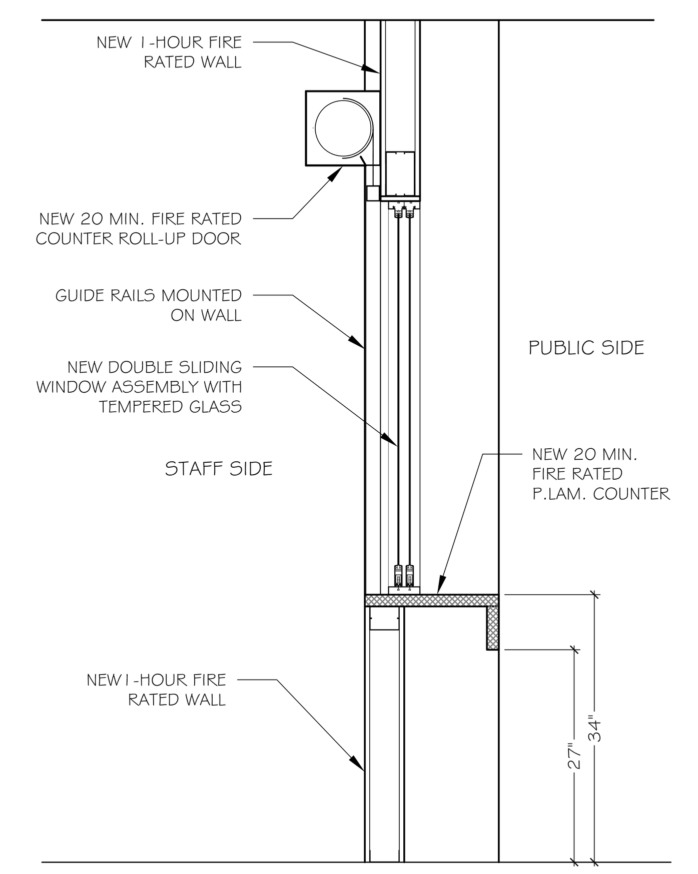

9 LOBBY COUNTER SECTION
SCALE: 3/4" = 1'-0"

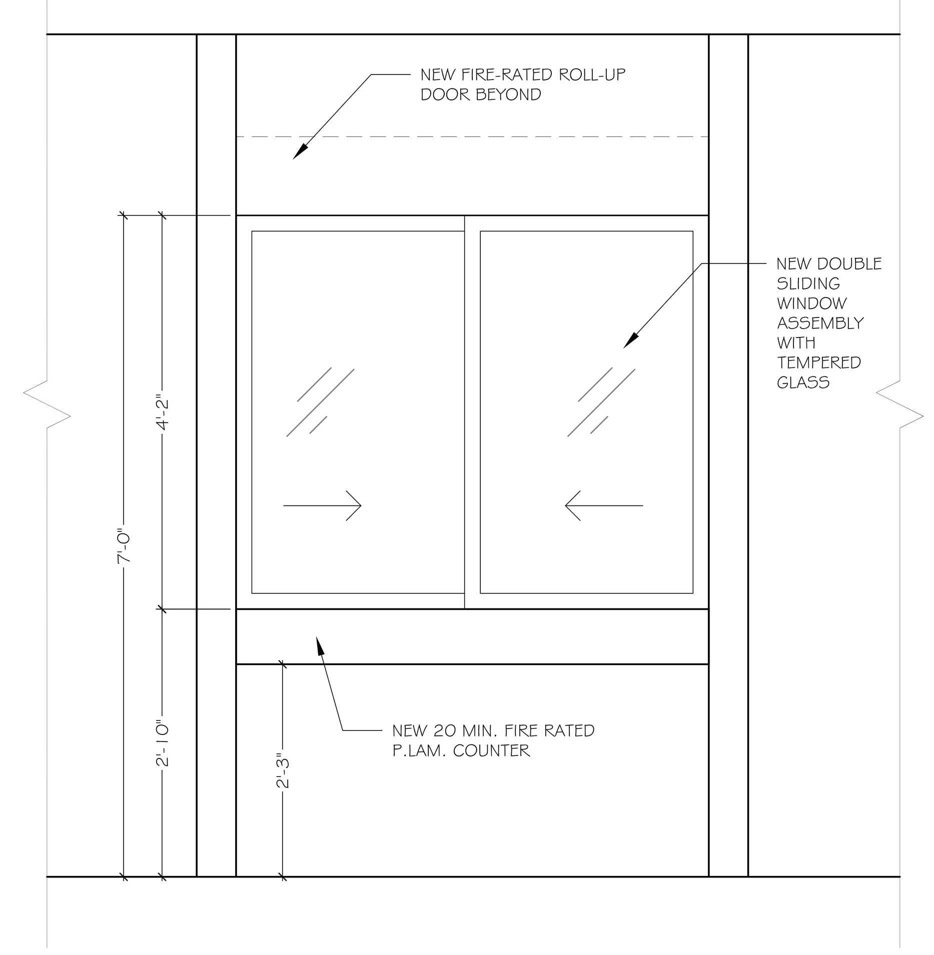

10 LOBBY COUNTER ELEVATION
SCALE: 3/4" = 1'-0"

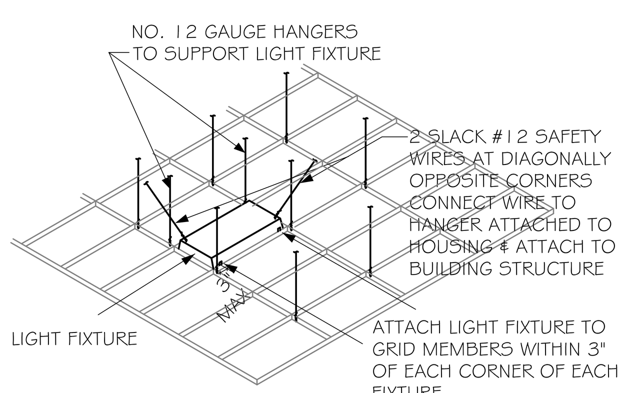

LIGHT FIXTURE SUPPORTS
NOT TO SCALE

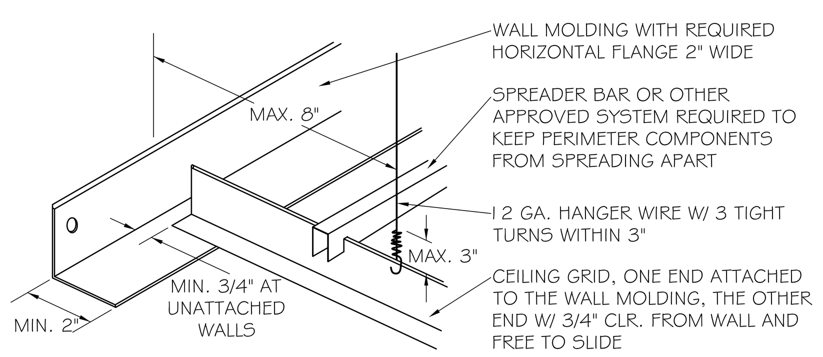

WALL MOLDING REQUIREMENTS FOR SUSPENSION CEILING SYSTEMS
NOT TO SCALE

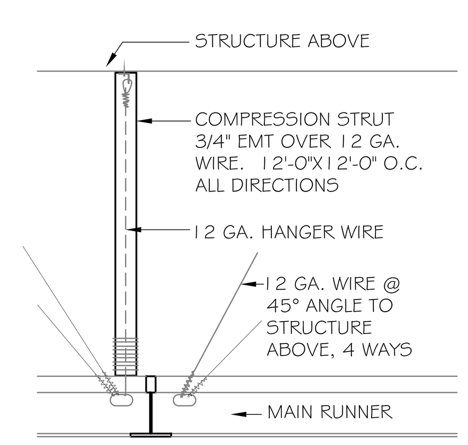

COMPRESSION STRUT DETAIL
NOT TO SCALE

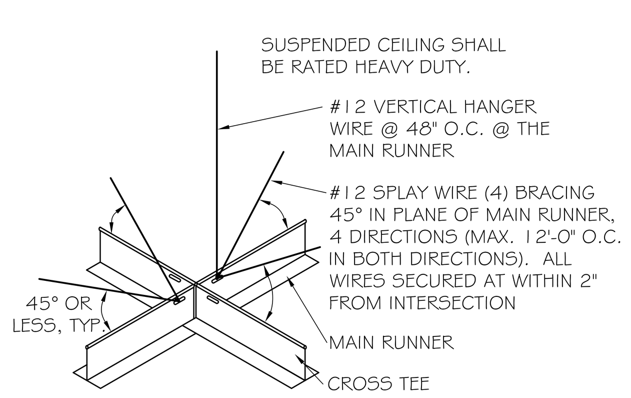

SEISMIC BRACING FOR SUSPENDED CEILING
NOT TO SCALE

KRJ Design Group
650.525.3700
11 Twenty-fourth Ave.
San Mateo, CA 94403

BHRS NORTH COUNTY YOUTH TEAM
OFFICE REMODEL
350 90TH STREET
DALY CITY, CA
94015

PROPOSED PLAN REVIEWED & APPROVED

DATE

SCALE: AS NOTED	DRWN BY: FV
DATE: 6/20/17	SQ. FT.: ± 4172 USF
FLOOR: SECOND	PROJ. NO.: KRJ350-90TH

REVISIONS

NO.	DATE/DESCRIPTION	BY
1	6/20/17 - ISSUE FOR REVIEW	FV

THIS CAD DOCUMENT IS PROPERTY OF KRJ DESIGN GROUP, LOCATED AT 11 TWENTY-FOURTH AVE., SAN MATEO, CA. THIS IS FOR KRJ INTERNAL USE ONLY. REMOVAL AND/OR DELETION OF THIS NOTICE IS PROHIBITED AND UNLAWFUL. KRJ REPRESENTS THIS DOCUMENT TO BE FOR INTERNAL USE ONLY UNLESS OTHERWISE SPECIFIED. THE INFORMATION HERE WAS GATHERED BY KRJ STAFF OR REPRESENTED TO BE CORRECT BY OWNER AND/OR AGENT. THE USE OF THIS DOCUMENT IS INTENDED FOR INTERNAL USE ONLY AS A REFERENCE DOCUMENT. THIS DOCUMENT IS NOT TO BE MODIFIED IN ANY WAY WITHOUT WRITTEN AUTHORIZATION FROM KRJ DESIGN GROUP OR ITS SUBSIDIARIES.

WE CANNOT ACCEPT RESPONSIBILITY FOR DIMENSIONS TAKEN FROM BLUEPRINTS SUPPLIED BY CLIENT/ARCHITECT.

ON SITE DIMENSIONS HAVE NOT BEEN TAKEN. VERIFICATION REQUIRED PRIOR TO BUILDOUT OR ORDER BY:

ENLARGED PLANS AND DETAILS

SHEET NO. A3

AIR DISTRIBUTION SCHEDULE

TAG	DESCRIPTION	MFR	MODEL	NECK SIZE	MODULE SIZE	CONSTRUCTION	BORDER TYPE	FINISH	OPPOSED BLADE DAMPER	REMARKS
A	CEILING DIFFUSER	TITUS	PSS	8"Φ	24"x24"	STEEL	LAY-IN	#26 WHITE	NO	
B	CEILING GRILLE	TITUS	PAR	8"Φ	24"x24"	STEEL	LAY-IN	#26 WHITE	NO	

NOTES:

- CLASSIFICATION LISTING NO. 3225-245:102 (FIRE DAMPER) & 3230-245:110 (SMOKE DAMPER)
- SMOKE/FIRE DAMPER DETAIL IS FOR REFERENCE ONLY, SMOKE/FIRE AND FIRE DAMPERS SHALL BE STATE FIRE MARSHAL APPROVED AND INSTALLED STRICTLY PER MANUFACTURER'S PRINTED INSTRUCTIONS. MANUFACTURER'S INSTALLATION INSTRUCTIONS SHALL BE MADE AVAILABLE TO THE INSPECTING AUTHORITIES.
- FULLY AUTOMATIC FIRE ALARM SYSTEM TO ACTIVATE SMOKE FIRE DAMPER
- RECTANGULAR DUCTWORK: RUSKIN MODEL FSD60
- ROUND DUCTWORK: RUSKIN MODEL FSDR25

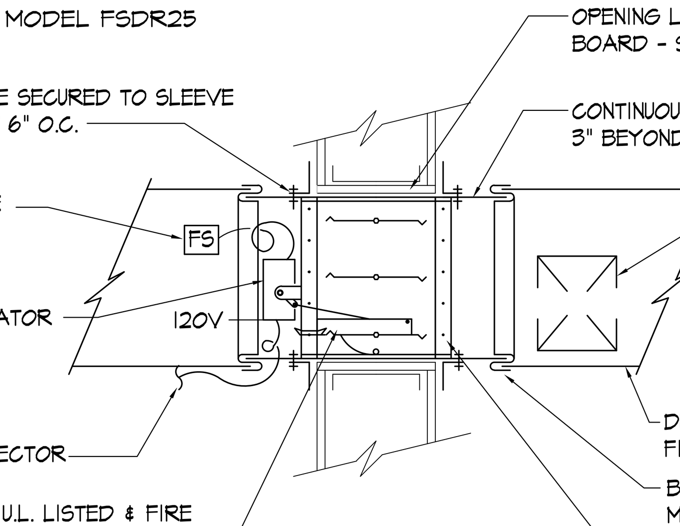

1 / M-1 COMBINATION SMOKE FIRE DAMPER
SCALE: NONE

CEILING MOUNTED TERMINAL UNITS SHALL BE POSITIVELY ATTACHED TOT HE CEILING SUSPENSION SYSTEM BY MECHANICAL MEANS TO RESIST A HORIZONTAL FORCE EQUAL TO THE WEIGHT OF THE COMPONENT, MIN. TWO SCREWS. IF WEIGHT OF UNIT IS LESS THAN OR EQUAL TO 20 LB, PROVIDE ONE #12 GA. SLACK SAFETY WIRE, IF UNIT IS BETWEEN 20 AND 56 LBS, PROVIDE TWO #12 SLACK SAFETY WIRES; FOR CEILING MOUNTED AIR TERMINALS WEIGHING MORE THAN 56 LBS SHALL BE SUPPORTED DIRECTLY FROM THE STRUCTURE ABOVE BY NOT LESS THAN FOUR TAUT #12 GA. WIRES ATTACHED TO THE TERMINAL DEVICE AND TO THE STRUCTURE ABOVE. THE FOUR TAUT #12 WIRES, INCLUDING THEIR ATTACHMENT TO THE STRUCTURE ABOVE, MUST BE CAPABLE OF SUPPORTING FOUR TIMES THE WEIGHT OF THE UNIT.

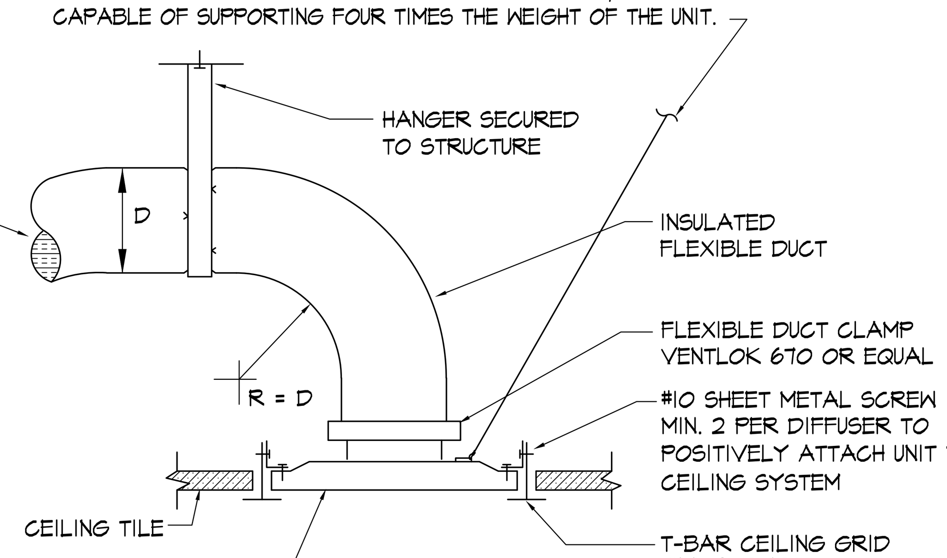

NOTE: SUPPORT SYSTEM MUST NOT DAMAGE DUCT OR CAUSE OUT OF ROUND SHAPE

2 / M-1 DUCT CONNECTION AT DIFFUSER
SCALE: NONE

LEGEND & ABBREVIATIONS

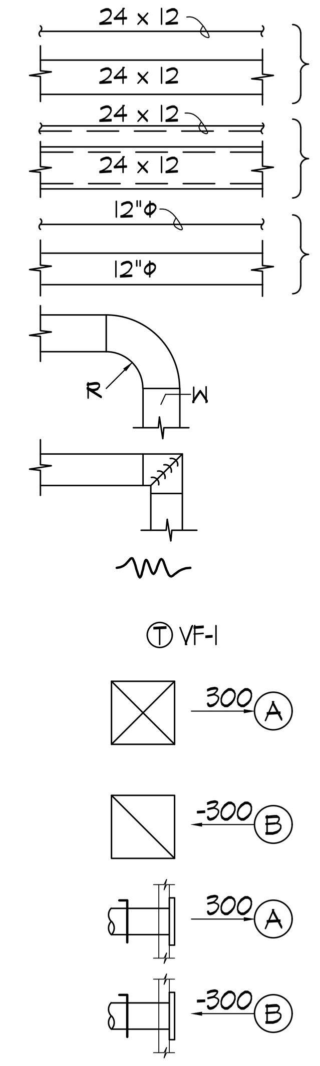

RECTANGULAR DUCT WITH NET INSIDE DIMENSION SHOWN, FIRST FIGURE IS WIDTH, SECOND FIGURE IS DEPTH

RECTANGULAR DUCT WITH INTERNAL INSULATION, NET INSIDE DIMENSION SHOWN, FIRST FIGURE IS WIDTH, SECOND FIGURE IS DEPTH

ROUND DUCT WITH NET INSIDE DIMENSIONS SHOWN

RADIUS ELBOW IN DUCT, R=W

SQUARE ELBOW IN DUCT WITH TURNING VANES

FLEXIBLE DUCT CONNECTION, MAXIMUM LENGTH = 5 FEET

THERMOSTAT MOUNTED ON WALL AT +48" U.O.N., NUMBER INDICATES CORRESPONDING UNIT TAG

CEILING DIFFUSER: TOP FIGURE INDICATES CFM, LETTER INDICATES TAG IN AIR DISTRIBUTION SCHEDULE; DIFFUSER IS A 4-WAY THROW, U.O.N.

CEILING GRILLE: TOP FIGURE INDICATES CFM, LETTER INDICATES TAG IN AIR DISTRIBUTION SCHEDULE

SIDEWALL DIFFUSER: TOP FIGURE INDICATES CFM, LETTER INDICATES TAG IN AIR DISTRIBUTION SCHEDULE

SIDEWALL GRILLE: TOP FIGURE INDICATES CFM, LETTER INDICATES TAG IN AIR DISTRIBUTION SCHEDULE

AP	ACCESS PANEL	FC	FAN COIL	N.T.S.	NOT TO SCALE
AFF	ABOVE FINISHED FLOOR	HP	HORSEPOWER	(N)	NEW
AFUE	ANNUAL FUEL UTILIZATION EFFICIENCY	MFR	MANUFACTURER	NIC	NOT IN CONTRACT
CD	CONDENSATE DRAIN	MCA	MIN. CIRCUIT AMPS	RA	RETURN AIR
CLG	CEILING	MFS	MAX. FUSE SIZE	RHC	REHEAT COIL
CFM	CUBIC FEET PER MINUTE	MBH	1000'S OF BTU/HR	SEER	SEASONAL ENERGY EFFICIENCY RATIO
CTE	CONNECT TO EXISTING	MOCP	MAXIMUM OVERCURRENT PROTECTION	EER	ENERGY EFFICIENCY RATIO
DN	DOWN	OSA	OUTSIDE AIR	E.S.P.	EXTERNAL STATIC PRESSURE
(E)	EXISTING			(TYP.)	TYPICAL

VAV / 3-4: EQUIPMENT TYPE / EQUIPMENT NO. } EQUIPMENT TAG

1 / M-2: DETAIL NO. / SHEET NO. } DETAIL TAG

SPECIFICATIONS

1. GENERAL
   - A. WORK SHALL COMPLY WITH STATE AND LOCAL CODES.
   - B. INTERRUPTION OF ELECTRICAL SERVICES OR EXISTING MECHANICAL SYSTEMS SHALL BE SCHEDULED IN ADVANCE AND ONLY AT TIMES APPROVED BY OWNER.
   - C. DURING PROSECUTION OF THIS CONTRACT, PORTIONS OF BUILDING WILL BE OCCUPIED AND IN USE. WORK DONE UNDER THIS CONTRACT MUST BE PERFORMED WITHOUT INCONVENIENCE TO OCCUPANTS INSOFAR AS POSSIBLE. BUILDING FURNISHINGS, OF WHATEVER NATURE, SHALL BE PROTECTED AND SPACE SHALL BE LEFT CLEAN.
   - D. CONTRACTOR SHALL KEEP PREMISES IN A CLEAN CONDITION, REMOVING DEBRIS AND RUBBISH AS IT ACCUMULATES, AND SHALL REMOVE APPARATUS, EQUIPMENT, SURPLUS MATERIALS, ETC., UPON COMPLETION OF WORK. CONTRACTOR SHALL LEAVE WORK SITE IN A CLEAN CONDITION AND IN GOOD ORDER TO SATISFACTION OF OWNER AND OCCUPANT.
   - E. AS-BUILT DRAWINGS
     1. PROVIDE AND KEEP UP-TO-DATE A COMPLETE "AS-BUILT" RECORD SET OF PRINTS.
     2. UPON COMPLETION OF WORK TRANSFER NEATLY, USING COMPETENT DRAFTSPERSON, ALL CHANGES ENTERED ON ABOVE PRINTS. SUBMIT TO LANDLORD.
   - F. GUARANTEE
     1. FURNISH WRITTEN GUARANTEE THAT WORK HAD BEEN PERFORMED IN ACCORDANCE WITH DRAWINGS AND SPECIFICATIONS AND THAT CONTRACTOR SHALL REPAIR OR REPLACE, TO SATISFACTION OF OWNER, ANY PORTION OF WORK THAT FAILS WITHIN A PERIOD OF ONE YEAR AFTER FINAL ACCEPTANCE, PROVIDED THAT SUCH FAILURE IS DUE TO DEFECTS IN MATERIAL OR WORKMANSHIP.
2. WORK INCLUDED
   1. PROVIDE LABOR, MATERIAL, TOOLS, APPURTENANCES AND EQUIPMENT REQUIRED TO FURNISH AND INSTALL COMPLETE AND OPERATIONAL MECHANICAL & PLUMBING SYSTEMS SHOWN.
   2. PROVIDE DEMOLITION WORK AS SHOWN.
   3. PROVIDE CUTTING AND PATCHING AS REQUIRED FOR INSTALLATION OF NEW WORK. PATCHING SHALL MATCH ADJACENT FINISH, COLOR AND MATERIAL TO SATISFACTION OF OWNER.
   4. PROVIDE LABOR, MATERIAL, TOOLS, APPURTENANCES AND EQUIPMENT REQUIRED TO FURNISH AND INSTALL HVAC SYSTEMS AND PLUMBING SYSTEMS SHOWN. GENERAL EXTENT OF WORK SHALL INCLUDE BUT NOT NECESSARILY BE LIMITED TO:
      - A. HVAC SYSTEMS INCLUDING DIFFUSERS, GRILLES, DUCTWORK, SMOKE-FIRE DAMPERS AND ACCESSORIES
      - B. EQUIPMENT SHALL BE COMPLETELY ASSEMBLED WITH GOOD WORKMANSHIP. LOCATE CONTROLS AND EQUIPMENT FOR SERVICE ACCESSIBILITY. NEW AND EXISTING EQUIPMENT SHALL BE PROTECTED FROM DAMAGE DURING THE CONSTRUCTION PROCESS.
3. MATERIALS
   - A. MATERIAL, EQUIPMENT, AND APPARATUS HEREINAFTER SPECIFIED SHALL BE NEW, UNLESS SPECIFICALLY NOTED OTHERWISE. MATERIAL, EQUIPMENT, AND APPARATUS MAY BE TAKEN FROM STOCK, BUT SUBMITTAL SHALL INCLUDE MANUFACTURER'S IDENTIFICATION AND STATEMENT INDICATING CONFORMANCE WITH SPECIFIED CODES, REGULATIONS, STANDARDS, REFERENCED SPECIFICATIONS, AND REQUIREMENTS SPECIFIED HEREIN. MATERIAL, EQUIPMENT AND APPARATUS SHALL BE IDENTIFIED BY MANUFACTURER'S NAME, NAMEPLATE AND PERTINENT DATA.
   - B. ELECTRICAL MATERIAL, EQUIPMENT, AND APPARATUS SHALL CONFORM TO REQUIREMENTS OF NEC AND U.L. SEE ELECTRICAL DRAWINGS.
   - C. MISCELLANEOUS STEEL, BOLTS, NUTS, AND WASHERS: MISCELLANEOUS STEEL ANGLES, CHANNELS, BRACKETS, RODS, CLAMPS, ETC., SHALL BE OF NEW MATERIALS CONFORMING TO ASTM A36. STEEL PARTS EXPOSED TO WEATHER OR WHERE NOTED SHALL BE HOT DIPPED GALVANIZED AFTER FABRICATION.
   - D. AIR DISTRIBUTION:
     1. WHERE NOT OTHERWISE SHOWN, SPECIFIED, OR REQUIRED BY CODES, DUCTWORK SHALL BE GALVANIZED SHEET METAL AND SHALL CONFORM TO HVAC CONSTRUCTION STANDARDS, LATEST EDITION, AS PUBLISHED BY SHEET METAL AND AIR CONDITIONING CONTRACTORS NATIONAL ASSOCIATION, INC (SMACNA).
     2. JOINTS AND FIELD FORMED SEAMS SHALL BE SEALED AIR TIGHT WITH DUCTMATE EZ-SEAL WATER BASED DUCT SEALANT.
     3. ROUND DUCTWORK: UNITED McGILL CORPORATION, OR EQUAL, SPIRAL-LOCK SEAM DUCT AND "UNI-SEAL" FITTINGS.
     4. FLEXIBLE INSULATED ROUND DUCTWORK: UL LISTED, CLASS 1 AIR DUCT. THERMAFLEX, OR APPROVED EQUAL
   - E. INSULATION:
     1. SUPPLY DUCTWORK: KNAUF FLEXIBLE GLASS FIBER ASTM C177, MINIMUM R4.2 WITH VAPOR BARRIER JACKET
     2. DUCT LINER: KNAUF FLEXIBLE BLANKET ASTM C553, MINIMUM R4.2, FASTEN WITH LINER FASTENERS GALV. STEEL SELF ADHESIVE PAD OR WELDED WITH PRESS ON HEAD.
4. EXECUTION
   - A. WORK SHALL BE IN ACCORDANCE WITH LATEST EDITIONS OF CALIFORNIA BUILDING CODE, CALIFORNIA MECHANICAL CODE AND CALIFORNIA PLUMBING CODE, OSHA, SAFETY STANDARDS AND LOCAL AUTHORITIES HAVING JURISDICTION.
   - B. WORK SHALL BE INSTALLED IN A WORKMANLIKE MANNER, PARALLEL TO BUILDING STRUCTURE, UNLESS SHOWN OTHERWISE
   - C. AT COMPLETION OF WORK GIVE LANDLORD INSTRUCTIONS IN OPERATION OF SYSTEMS AND PROVIDE TWO COPIES EACH OF MANUFACTURER'S OPERATING AND MAINTENANCE INSTRUCTIONS AND WARRANTIES AND GUARANTEES ON EQUIPMENT.
   1. TESTING, ADJUSTING AND BALANCING
      1. SUBMITTALS
         - A. REPORTS: PRE-CONSTRUCTION AND POST CONSTRUCTION
         - B. TEST REPORTS: SUBMIT PRIOR TO FINAL ACCEPTANCE OF PROJECT AND FOR INCLUSION IN OPERATING AND MAINTENANCE MANUALS. PROVIDE IN SOFT COVER, LETTER SIZE, 3-RING BINDER, WITH INDEX PAGE AND TABS, AND COVER IDENTIFICATION. INCLUDE REDUCED SCALE DRAWINGS WITH AIR OUTLETS AND EQUIPMENT IDENTIFIED TO CORRESPOND WITH DATA SHEETS, AND INDICATING THERMOSTAT LOCATIONS.
         - C. REPORT FORMS: AABC NATIONAL STANDARDS FOR TOTAL SYSTEM BALANCE FORMS.
      2. EXAMINATION AND PREPARATION
         - A. BEFORE COMMENCING WORK, VERIFY THAT SYSTEMS ARE COMPLETE AND OPERABLE.
         - B. REPORT ANY DEFECTS, DEFICIENCIES, OR ABNORMAL CONDITIONS IN MECHANICAL SYSTEMS WHICH PREVENT SYSTEM BALANCE.
         - C. BEGINNING OF WORK MEANS ACCEPTANCE OF EXISTING CONDITIONS.
         - D. RECORDED DATA SHALL REPRESENT ACTUALLY MEASURED OR OBSERVED CONDITION.
         - E. PERMANENTLY MARK SETTINGS OF VALVES, DAMPERS, AND OTHER ADJUSTMENT DEVICES. SET AND LOCK MEMORY STOPS.
      3. INSTALLATION TOLERANCES
         - A. AIR HANDLING SYSTEMS: ADJUST TO WITHIN PLUS OR MINUS 10 PERCENT OF DESIGN FOR SUPPLY AND EXHAUST SYSTEMS SHOWN.
         - B. AIR OUTLETS AND INLETS: ADJUST TO WITHIN PLUS OR MINUS 5 PERCENT OF DESIGN AIR QUANTITY SHOWN ON PLANS.
      4. AIR SYSTEM PROCEDURE
         - A. ADJUST AIR HANDLING AND DISTRIBUTION SYSTEMS TO PROVIDE REQUIRED OR DESIGN SUPPLY, AND EXHAUST AIR QUANTITIES.
         - B. MAKE AIR QUANTITY MEASUREMENTS IN DUCTS BY TRAVERSE OF ENTIRE CROSS SECTIONAL AREA OF DUCT.
         - C. MEASURE AIR QUANTITIES AT AIR INLETS AND OUTLETS.
         - D. USE VOLUME CONTROL DEVICES TO REGULATE AIR QUANTITIES ONLY TO EXTENT THAT ADJUSTMENTS DO NOT CREATE OBJECTIONABLE AIR MOTION OR SOUND LEVELS. EFFECT VOLUME CONTROL BY DUCT DAMPERS.
         - E. MAKE ALLOWANCE FOR AIR FILTER RESISTANCE AT THE TIME OF THE TESTS. THE MAIN AIR SUPPLIES SHALL BE AT DESIGN AIR QUANTITIES AND AT AN AIR RESISTANCE ACROSS THE FILTER BANK MIDWAY BETWEEN THE DESIGN SPECIFICATIONS FOR CLEAN AND DIRTY FILTERS.

GENERAL NOTES:

1. WORK SHALL COMPLY WITH STATE & LOCAL CODES
2. PROVIDE LABOR, MATERIAL, TOOLS, APPURTENANCES & EQUIPMENT REQUIRED TO FURNISH & INSTALL COMPLETE & OPERATIONAL PLUMBING SYSTEMS SHOWN
3. PROVIDE CUTTING & PATCHING AS REQUIRED FOR INSTALLATION OF NEW WORK. PATCHING SHALL MATCH ADJACENT FINISH, COLOR & MATERIAL TO SATISFACTION OF OWNER
4. INSTALLATION INSTRUCTIONS FOR LISTED EQUIPMENT SHALL BE MADE AVAILABLE TO BUILDING INSPECTOR AT TIME OF INSPECTION
5. ALL DUCTWORK SHALL BE INSULATED PER REQUIREMENTS OF TITLE 24
6. SEE ARCHITECTURAL DRAWINGS FOR EXACT LOCATION OF DIFFUSER AND GRILLES, THERMOSTATS, AND ALL OTHER VISIBLE DEVICES AND CONTROLS

DRAWING INDEX:

M-1 MECHANICAL LEGEND, NOTES & SCHEDULES
M-2 MECHANICAL FLOOR PLANS

MECHANICAL SCOPE OF WORK

THE MECHANICAL SCOPE OF WORK FOR THIS PROJECT INCLUDES:

- TEST, RECORD AIR FLOWS OF HVAC SYSTEMS THROUGHOUT SECOND FLOOR - PRIOR TO START OF CONSTRUCTION, PROVIDE AIR BALANCE REPORT TO LANDLORD
- MODIFY THE EXISTING VAV SYSTEM FOR THE ADDITION OF A NEW RATED CORRIDOR, INCLUDING RELOCATING ONE VAV BOX AND ADDING TWO SMOKE FIRE DAMPERS
- MODIFY THE EXISTING VAV SYSTEM FOR THE ADDITION OF 6 NEW OFFICES
- TEST, ADJUST AND BALANCE AIR FLOW OF HVAC SYSTEMS THROUGHOUT SECOND FLOOR - UPON COMPLETION OF PROJECT, PROVIDE FINAL AIR BALANCE REPORT TO LANDLORD

REVISION

KRJ Design Group
650.525.3700
11 Twenty-fourth Ave.
San Mateo, CA 94403

REGISTERED PROFESSIONAL ENGINEER KENT CALVIN LAWS No. M26762 Exp. 9/2018 MECHANICAL STATE OF CALIFORNIA

LAWS & ASSOCIATES, Inc.
MECHANICAL CONSULTING ENGINEERS
1801 MURCHISON DRIVE, SUITE 160
BURLINGAME, CALIFORNIA 94010
(650) 697-5691
FAX: (650) 697-5692

BHRS NORTH COUNTY YOUTH TEAM
OFFICE REMODEL
350 90TH STREET, 2ND FLOOR
DALY CITY, CA

LEGEND & ABBREVIATIONS, SCHEDULES, NOTES & SPECIFICATIONS

DATE	8/17/2017
SCALE	AS NOTED
DRAWN	CL/KL
JOB	17055
SHEET	M-1
OF	SHEETS

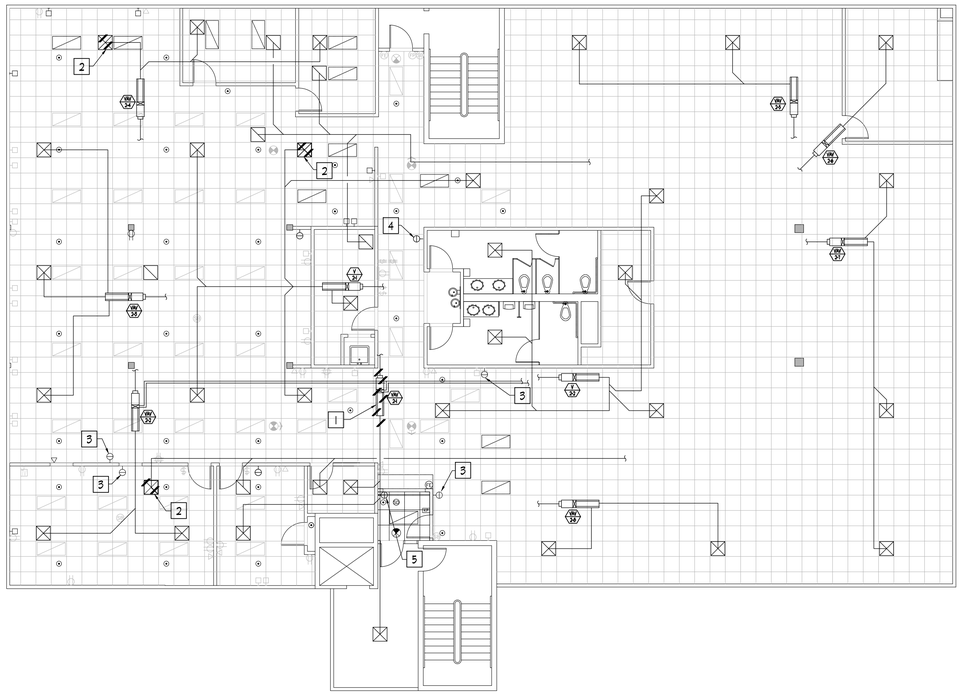

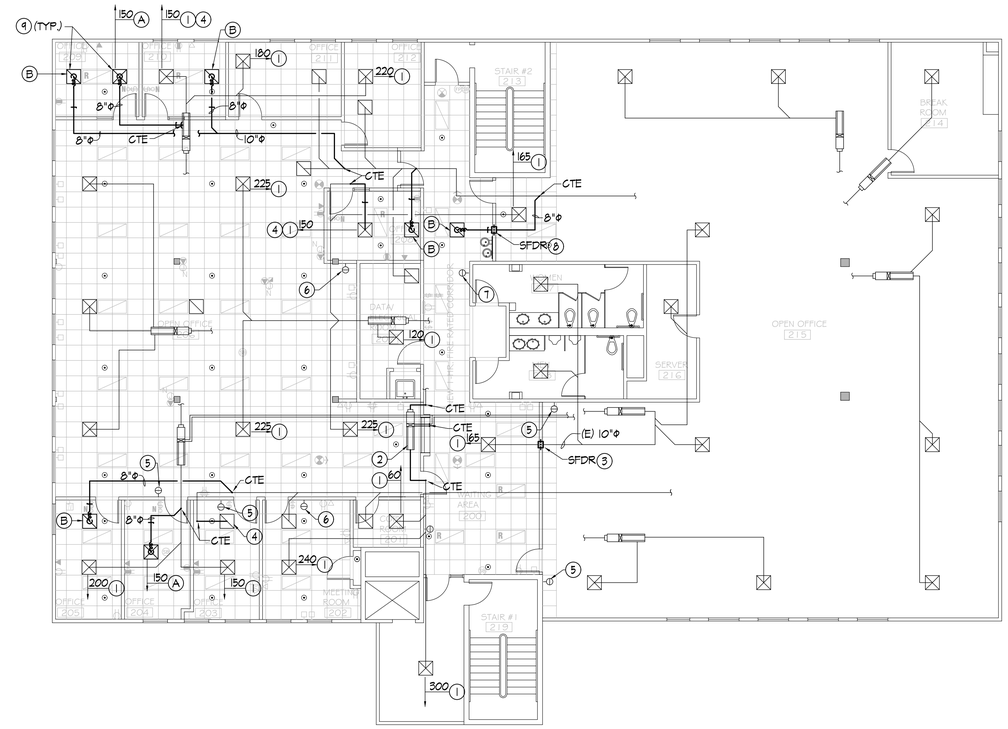

DEMOLITION SHEET NOTES:

1. REMOVE VAV BOX, TO BE RELOCATED, SEE 2/M-2
2. RELOCATE DIFFUSER OR GRILLE, SEE 2/M-2
3. REMOVE THERMOSTAT & LOCK BOX, TO BE RELOCATED, SEE 2/M-2
4. REMOVE BUILDING SENSOR & LOCK BOX PRIOR TO CONSTRUCTION, TO BE REINSTALLED AFTER NEW CORRIDOR WALL IS INSTALLED
5. REMOVE THERMOSTAT, RELOCATE IF STILL OPERATIONAL

DEMOLITION GENERAL NOTES:

1. PRIOR TO THE START OF DEMOLITION, AN INDEPENDENT AIR BALANCE CONTRACTOR SHALL READ AND RECORD THE EXISTING AIR FLOWS ON THE SECOND FLOOR; PROVIDE A TYPE WRITTEN REPORT, WITHIN ONE WEEK OF TAKING THE READINGS, FORMAT PER AABC STANDARDS (SEE M-1), SUBMIT THE REPORT TO THE PROJECT MANAGER, LANDLORD AND THE PROJECT ARCHITECT

SHEET NOTES:

1. BALANCE (E) DIFFUSER OR GRILLE TO (N) AIR FLOW SHOWN
2. TO AVOID (N) CORRIDOR WALL, RELOCATE (E) VAV BOX TO (N) LOCATION SHOWN, EXTEND (E) HHWS&R PIPING, DUCTWORK, POWER, ETC. TO (N) LOCATION OF VAV BOX AND RECONNECT
3. INSTALL SMOKE/FIRE DAMPER IN (E) DUCT AT (N) RATED WALL, DETAIL SEE 1/M-1
4. RELOCATE (E) DIFFUSER OR GRILLE TO (N) LOCATION SHOWN, EXTEND DUCTWORK
5. RELOCATE THERMOSTAT & LOCK BOX TO (N) LOCATION SHOWN
6. (E) THERMOSTAT TO REMAIN
7. (E) BUILDING SENSOR & LOCK BOX, PROTECT DURING CONSTRUCTION
8. INSTALL SMOKE/FIRE DAMPER IN (N) RETURN DUCT AT (N) RATED WALL, SEE DETAIL 1/M-1
9. INSTALL (N) DIFFUSER OR GRILLE IN T-BAR CEILING, SEE DETAIL 2/M-1

GENERAL NOTES:

1. AT THE END OF CONSTRUCTION, AN INDEPENDENT AIR BALANCE CONTRACTOR SHALL TEST, ADJUST, BALANCE AND RECORD THE AIR FLOWS ON THE SECOND FLOOR; ADJUST AIR FLOWS EITHER TO MATCH THE AIR FLOWS RECORDED IN THE PRE-CONSTRUCTION REPORT, OR TO THE NEW AIR FLOWS SHOWN ON 2/M-2; PROVIDE A TYPE WRITTEN REPORT, WITHIN ONE WEEK OF TAKING THE READINGS, FORMAT PER AABC STANDARDS (SEE M-1), SUBMIT THE REPORT TO THE PROJECT MANAGER, LANDLORD AND THE PROJECT ARCHITECT
2. FIRE STOP PIPE AND DUCT PENETRATIONS OF RATED WALLS WITH U.L. LISTED FIRE STOP SYSTEM
3. SMOKE/FIRE DAMPERS NOT REQUIRED IN DUCTWORK PASSING THROUGH RATED CORRIDOR WALLS IF GREATER THAN 26 GA. AND HAVE NO OPENINGS THAT COMMUNICATE THE CORRIDOR WITH ADJACENT SPACES OR ROOMS (2016 CBC 717.5.4 AND 717.5.4.1)

1 / M-2 MECHANICAL SECOND FLOOR DEMOLITION PLAN
SCALE: 1/8"=1'-0"

2 / M-2 MECHANICAL NEW SECOND FLOOR PLAN
SCALE: 1/8"=1'-0"

REVISION

KRJ Design Group
650.525.3700
11 Twenty-fourth Ave.
San Mateo, CA 94403

REGISTERED PROFESSIONAL ENGINEER
Lic. No. M29782
Exp. 9/2018
MECHANICAL
STATE OF CALIFORNIA

LAWS & ASSOCIATES, Inc.
MECHANICAL CONSULTING ENGINEERS
1801 MURCHISON DRIVE, SUITE 160
BURLINGAME, CALIFORNIA 94010
(650) 697-5691
FAX: (650) 697-5692

BHRS NORTH COUNTY YOUTH TEAM
OFFICE REMODEL
350 90TH STREET, 2ND FLOOR
DALY CITY, CA

MECHANICAL DEMOLITION & FLOOR PLAN

DATE	8/17/2017
SCALE	AS NOTED
DRAWN	CL/KL
JOB	17055
SHEET	M-2
OF	SHEETS

PLUMBING FIXTURE SCHEDULE

TAG	DESCRIPTION	W OR S	V	CW	HW	SPECIFICATIONS
UR-1	WALL MOUNTED URINAL (0.125 GPF) (ADA)	2"	1-1/2"	3/4"	--	KOHLER "BARDON" MODEL K-4991-ET-0 WALL HUNG ADA URINAL; SLOAN "ECOS" MODEL 8186 SENSOR OPERATED, BATTERY POWERED, EXPOSED FLUSHOMETER WITH 0.125 GPF

LEGEND & ABBREVIATIONS

		PIPING TO BE REMOVED
	CW	DOMESTIC COLD WATER PIPING
	HW	DOMESTIC HOT WATER PIPING
	S OR W	SOIL OR WASTE PIPING (ABOVE FLOOR)
	S OR W	SOIL OR WASTE PIPING (BELOW FLOOR)
	V	VENT PIPING
	S OR W	EXISTING SOIL OR WASTE PIPING (ABOVE FLOOR)
	S OR W	EXISTING SOIL OR WASTE PIPING (BELOW FLOOR)
	SS	SANITARY SEWER PIPING (BELOW GRADE)
FCO	FCO	FLOOR CLEANOUT
	SOV	SHUT OFF VALVE, BALL TYPE
	CV	CHECK VALVE; SILENT TYPE
	UN	PIPING UNION

AFF	ABOVE FINISHED FLOOR	(N)	NEW
AP	ACCESS PANEL	N.T.S.	NOT TO SCALE
BF	BELOW FLOOR	OFCI	OWNER FURNISHED & CONTRACTOR INSTALLED
CD	CONDENSATE DRAIN		
CLG	CEILING		
CTE	CONNECT TO EXISTING	ORD	OVERFLOW ROOF DRAIN
CPC	CALIFORNIA PLUMBING CODE	POC	POINT OF CONNECTION
		RD	ROOF DRAIN
CTN	CONNECT TO NEW	SS	STAINLESS STEEL
DN	DOWN	SOV	SHUT OFF VALVE
DFU	DRAINAGE FIXTURE UNIT	TYP	TYPICAL
(E)	EXISTING	U.O.N.	UNLESS OTHERWISE NOTED
GPM	GALLONS PER MINUTE	WCO	WALL CLEANOUT
IE	INVERT ELEVATION	WSFU	WATER SUPPLY FIXTURE UNIT
MFR	MANUFACTURER		

WH 1 — EQUIPMENT TYPE / EQUIPMENT NO. } EQUIPMENT TAG

1 / P3.1 — DETAIL NO. / SHEET NO. } DETAIL TAG

CAL GREEN NOTES:

1. ALL NEW WATER CLOSETS, URINALS, LAVATORY FAUCETS AND KITCHEN FAUCETS INSTALLED ON THIS PROJECT SHALL MEET THE 2016 CALIFORNIA GREEN BUILDING STANDARDS CODE NONRESIDENTIAL MANDATORY MEASURES IN SECTION 5.303.3 FOR WATER REDUCTION WITH THE FOLLOWING MAXIMUM FLOW RATES:
   - WATER CLOSET = 1.28 GPF
   - WALL URINAL = 0.125 GPF
   - LAVATORY FAUCET = 0.5 GPM
   - KITCHEN FAUCET = 1.8 GPM
   - METERING FAUCET = 0.20 GPC
2. PLUMBING FIXTURES & FITTING SHALL COMPLY WITH 2016 CPC & STANDARDS REFERENCED IN TABLE 1401.1 OF THE CPC & CHAPTER 6 OF THE CGBSC

PIPING MATERIALS:

- SANITARY DRAIN WASTE AND VENT:

  ABOVE GRADE:
  HUBLESS CAST IRON SOIL PIPE AND FITTINGS: ASTM A888 OR CISPI 301 PIPE AND FITTINGS. ASTM C 1277, CISPI 310 COUPLINGS AND NSF COMPLIANT. PIPE AND FITTINGS SHALL BE MARKED WITH THE COLLECTIVE TRADEMARK OF THE CAST IRON SOIL PIPE INSTITUTE. ASTM C 564 RUBBER GASKETS.

  COPPER TUBE: ASTM B306, TYPE DWV WITH BRONZE OR WROUGHT COPPER FITTINGS AND SOLDER JOINTS.

  BELOW GRADE:
  HUB AND SPIGOT SOIL PIPE AND FITTINGS: ASTM 74 PIPE AND FITTINGS; ASTM C 564 RUBBER GASKETS. PIPE AND FITTINGS SHALL BE MARKED WITH THE COLLECTIVE TRADEMARK OF THE CAST IRON SOIL PIPE INSTITUTE. OR HUBLESS CAST IRON AS LISTED ABOVE.

  MANUFACTURERS: AB&I FOUNDRY, CHARLOTTE PIPE & FOUNDRY OR TYLER PIPE INDUSTRIES FOR CAST IRON. CAMBRIDGE-LEE INDUSTRIES, LLC, CERRO FLOW PRODUCTS, LLC OR MUELLER STREAMLINE COMPANY FOR COPPER TUBE AND FITTINGS.

- WATER:
  ABOVE GRADE:
  COPPER TUBING: ASTM B88 TYPE L HARD DRAWN WITH CAST BRASS OR WROUGHT COPPER FITTINGS AND LEAD-FREE SOLDER JOINTS. MANUFACTURERS: CAMBRIDGE-LEE INDUSTRIES, LLC, CERRO FLOW PRODUCTS, LLC OR MUELLER STREAMLINE COMPANY

- BALL VALVES:
  MANUFACTURERS: MILWAUKEE, STOCKHAM, OR APOLLO. UP TO 2" MILWAUKEE MODEL UPBA-100 BRONZE BALL VALVE, TWO-PIECE, STANDARD PORT, LEAD-FREE

GENERAL NOTES:

1. WORK SHALL COMPLY WITH STATE & LOCAL CODES
2. PROVIDE LABOR, MATERIAL, TOOLS, APPURTENANCES & EQUIPMENT REQUIRED TO FURNISH & INSTALL COMPLETE & OPERATIONAL PLUMBING SYSTEMS SHOWN
3. INSTALLATION INSTRUCTIONS FOR LISTED EQUIPMENT SHALL BE MADE AVAILABLE TO BUILDING INSPECTOR AT TIME OF INSPECTION
4. PIPING SHALL BE SEISMICALLY BRACED & SUPPORTED PER CBC CHAPTER 16
5. DRAINAGE PIPING SHALL BE INSTALLED AT MIN. 1/4" PER FOOT SLOPE, U.O.N.
6. CALIFORNIA'S LEAD-FREE PLUMBING LAW, CALIFORNIA HEALTH AND SAFETY CODE 116875, CREATED BY SENATE BILL SB 1334 AND ASSEMBLY BILL AB 1953 AND EFFECTIVE JANUARY 10, 2010, REQUIRES THAT ALL PLUMBING FIXTURES THAT PROVIDE WATER FOR HUMAN CONSUMPTION, INCLUDING THOSE FOR DRINKING OR COOKING, LE LEAD-FREE. IN ADDITION, DESIGNERS SHALL SPECIFY LEAD-FREE SOLDER.
7. PLUMBING ACCESS PANELS MUST BE ABLE TO BE OPENED BY ONE KEY. THE KEY MUST BE PROVIDED TO THE LANDLORD.
8. FLOORS SHALL BE SLOPED TO FLOOR DRAINS. DO NOT EXCEED CALIFORNIA BUILDING CODE OR ADA REQUIREMENTS FOR MAXIMUM 2% FLOOR SLOPE.
9. EACH TOILET ROOM SHALL HAVE ISOLATION VALVES FOR HOT AND COLD WATER. LOCATED THE VALVES IN AN ACCESSIBLE LOCATION. EACH PLUMBING FIXTURE SHALL HAVE SHUT OFF VALVE(S).
10. SANITARY SEWER CLEANOUTS SHALL BE LOCATED AT EACH CHANGE OF DIRECTION AND AT A MAXIMUM OF 50 FOOT INTERVALS IN STRAIGHT RUNS.

PLUMBING DRAWING INDEX

P-1	LEGEND & ABBREVIATIONS, SCHEDULES, NOTES & SPECIFICATIONS
P-2	DEMOLITION AND FLOOR PLANS

REVISION

KRJ Design Group
650.525.3700
11 Twenty-fourth Ave.
San Mateo, CA 94403

REGISTERED PROFESSIONAL ENGINEER — CALIFORNIA — No. M28762 — Exp. 3/30/18 — MECHANICAL — STATE OF CALIFORNIA

LAWS & ASSOCIATES, Inc.
MECHANICAL CONSULTING ENGINEERS
1801 MURCHISON DRIVE, SUITE 160
BURLINGAME, CALIFORNIA 94010
(650) 697-6691
FAX: (650) 697-6692

BHRS NORTH COUNTY YOUTH TEAM
OFFICE REMODEL
350 90TH STREET, 2ND FLOOR
DALY CITY, CA

LEGEND & ABBREVIATIONS, SCHEDULES, NOTES & SPECIFICATIONS

DATE	8/17/2017
SCALE	AS NOTED
DRAWN	CL/KL
JOB	17055
SHEET	P-1
OF	SHEETS

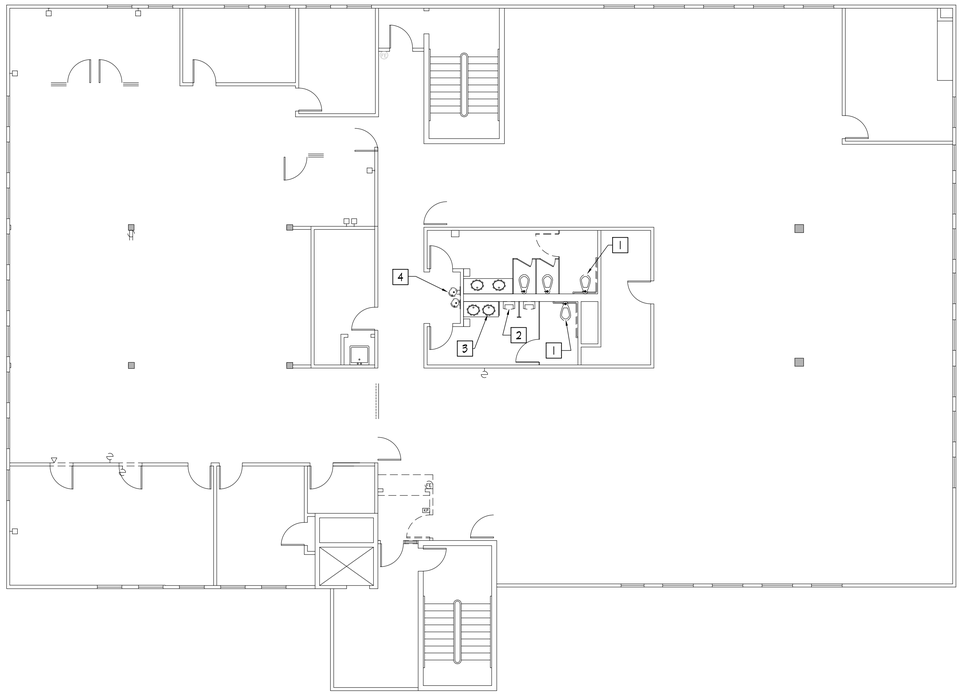

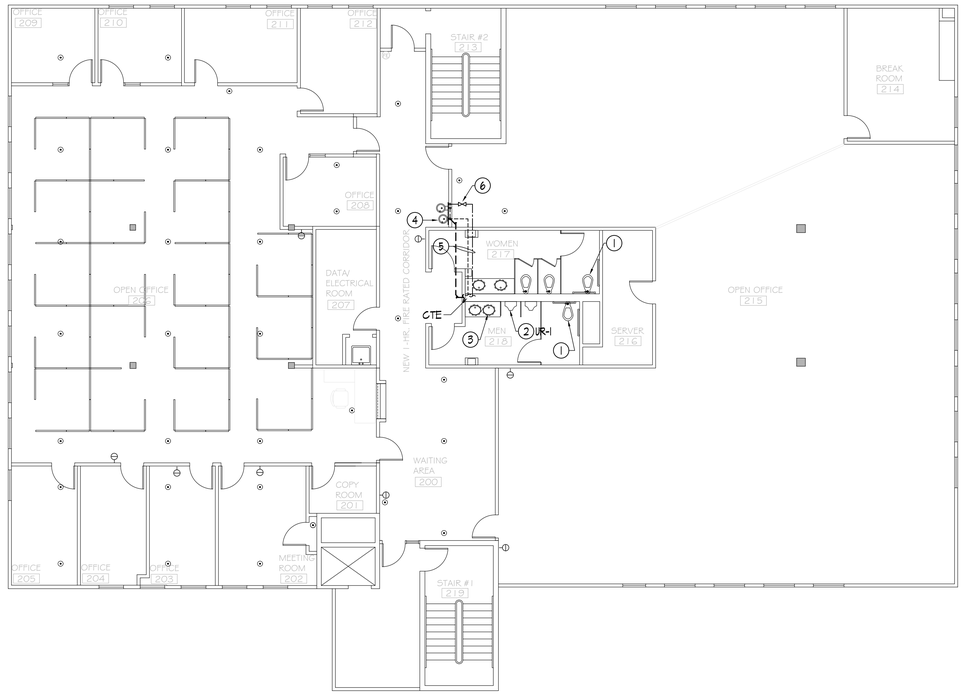

DEMOLITION SHEET NOTES:

1. REMOVE FLOOR MOUNTED WATER CLOSET
2. REMOVE WALL MOUNTED URINAL
3. REMOVE COUNTER TOP LAVATORY
4. REMOVE DRINKING FOUNTAIN

DEMOLITION GENERAL NOTES:

1. "REMOVE" IMPLIES THE COMPLETE REMOVAL OF INDICATED EQUIPMENT, INCLUDING INSULATION, HANGERS, SUPPORTS, CONTROLS, WIRING, ETC. REMOVE BRANCH DUCTWORK OR PIPING BACK TO WITHIN 6" OF ACTIVE MAIN AND CAP
2. SEE ARCHITECTURAL NOTES REGARDING REMOVAL AND REINSTALLATION OF PLUMBING FIXTURES FOR ADDITIONAL INFORMATION

SHEET NOTES:

1. REINSTALL (E) FLOOR MOUNTED WATER CLOSET TO BE 17"-18" FROM ADJACENT WALL, PER ARCHITECTURAL NOTES; OFFSET S PIPING BELOW FLOOR, PROVIDE (N) ROUGH-IN WITH CLOSET FLANGE AND WAX SEAL; EXTEND CW PIPING IN WALL AS REQUIRED, REINSTALL FLUSH VALVE
2. INSTALL NEW ADA URINAL IN LOCATION SHOWN AND PER ARCHITECTURAL NOTES; PROVIDE (N) ROUGH-IN, CONNECT TO (E) W, V AND CW IN WALL
3. REINSTALL (E) COUNTER TOP LAVATORY TO BE 18" FROM ADJACENT URINAL PARTITION PER ARCHITECTURAL NOTES; PROVIDE (N) ROUGH-IN, CONNECT TO (E) W, V, HW AND CW IN WALL; PROVIDE (N) STOPS
4. REINSTALL (E) DRINKING FOUNTAIN IN (N) LOCATION AS INDICATED ON ARCHITECTURAL NOTES; PROVIDE (N) ROUGH-IN, CONNECT TO (E) W, V, AND CW
5. 1-1/2" W DOWN IN WALL TO BELOW FLOOR, EXTEND BELOW FLOOR TO (E) S OR W PIPING BELOW FLOOR AND CONNECT TO (E); 1-1/2" V UP IN WALL TO OVER CLG, EXTEND V PIPING OVER CLG AND CONNECT TO (E) V AT TOILET CORE; EXTEND 1/2" CW FROM TOILET CORE OVER CLG & DOWN IN WALL TO RELOCATED DRINKING FOUNTAIN
6. PROVIDE LEAD-FREE, BALL TYPE SHUT OFF VALVE IN 1/2" CW PIPING OVER CLG TO RELOCATED DRINKING FOUNTAIN

GENERAL NOTES:

1. FIRE STOP PIPE PENETRATIONS OF RATED WALLS WITH U.L. LISTED FIRE STOP SYSTEM
2. CORE DRILL FLOOR FOR NEW PIPING WITH EXTREME CAUTION, SEE NOTES ON ARCHITECTURAL REGARDING CORE DRILLING THE (E) POST-TENSION SLAB
3. CUT AND PATCH AS REQUIRED FOR INSTALLATION OF WORK, PATCH TO MATCH (E) ADJACENT MATERIALS AND FINISHES

1 / P-2 PLUMBING SECOND FLOOR DEMOLITION PLAN
SCALE: 1/8"=1'-0"

1 / P-2 PLUMBING SECOND FLOOR PLAN
SCALE: 1/8"=1'-0"

REVISION

KRJ Design Group
650.525.3700
11 Twenty-fourth Ave.
San Mateo, CA 94403

REGISTERED PROFESSIONAL ENGINEER
CHRIS LAWS
No. M25782
Exp. 9/2018
MECHANICAL
STATE OF CALIFORNIA

LAWS & ASSOCIATES, Inc.
MECHANICAL CONSULTING ENGINEERS
1801 MURCHISON DRIVE, SUITE 160
BURLINGAME, CALIFORNIA 94010
(650) 697-5691
FAX: (650) 697-5692

BHRS NORTH COUNTY YOUTH TEAM
OFFICE REMODEL
350 90TH STREET, 2ND FLOOR
DALY CITY, CA

PLUMBING DEMOLITION & FLOOR PLAN

DATE	8/17/2017
SCALE	AS NOTED
DRAWN	CL/KL
JOB	17055
SHEET	P-2
OF	SHEETS

GENERAL NOTES

1. THE COMPLETE ELECTRICAL INSTALLATION SHALL BE IN ACCORDANCE WITH THE LATEST ADOPTED EDITION OF THE NATIONAL ELECTRICAL CODE, SPECIFICATIONS AND STANDARD, THE LATEST RULES AND REGULATIONS OF THE SAFETY ORDERS ISSUED BY THE DIVISION OF INDUSTRIAL SAFETY, THE NATIONAL BOARD OF FIRE UNDERWRITERS AND ALL APPLICABLE STATE AND LOCAL CODES ISSUED BY AUTHORITIES HAVING JURISDICTION.

2. PRIOR TO SUBMITTING PROPOSAL, BIDDER SHALL EXAMINE ALL GENERAL CONSTRUCTION DRAWINGS. VISIT CONSTRUCTION SITE AND ATTEND THE PRE-BID MEETING TO BE FAMILIAR WITH EXISTING CONDITIONS UNDER WHICH HE WILL HAVE TO OPERATE AND WHICH WILL IN ANYWAY AFFECT THE WORK UNDER THIS CONTRACT. NO SUBSEQUENT ALLOWANCE WILL BE MADE IN THIS CONNECTION IN BEHALF OF THE CONTRACTOR FOR ANY ERROR OR NEGLIGENCE ON HIS PART.

3. THIS CONTRACTOR SHALL INCLUDE ALL CONTINGENCIES WHICH MAY RAISE AND WHICH MAY BE REQUIRED BY ALTERATION AND DEMOLITION WORK. THIS IS TO INCLUDE ALL REMOVAL, RELOCATION AND REWORKING OF ELECTRICAL OUTLETS, CONDUITS, WIRING AND ITEMS FOR ELECTRICAL EQUIPMENT REQUIRED AND ANY NECESSARY SPLICING OR EXTENSION OF EXISTING CONDUIT AND WIRING SYSTEMS. THE ELECTRICAL CONTRACTOR SHALL VISIT JOB SITE AND DETERMINE EXTENT OF THE WORK.

4. FIELD VERIFY TO CONFIRM ALL FIRE RESISTIVE CEILINGS AND WALLS. PROVIDE FIRE STOP SEALS PER UNIFORM BUILDING CODE FOR CONDUIT PENETRATION THROUGH FIRE RESISTIVE FLOORS, WALLS AND CEILINGS.

5. ALL ELECTRICAL MATERIALS AND EQUIPMENT SHALL BE LISTED BY UNDERWRITER'S LABORATORIES AND BEAR THEIR LABEL.

6. CONDUIT ROUTING SHOWN IS ESSENTIALLY DIAGRAMMATIC. CONTRACTOR SHALL LAYOUT RUNS TO SUIT FIELD CONDITIONS AND THE COORDINATION REQUIREMENTS OF OTHER TRADES. ALL EXPOSED CONDUIT, BOXES, FITTINGS, SUPPORT, ETC. SHALL BE PAINTED TO MATCH ADJACENT SURFACES.

7. THE CONTRACTOR SHALL CONSULT THE ARCHITECTURAL AND OTHER DRAWINGS RELATED TO THIS PROJECT FOR ADDITIONAL WORK TO BE PROVIDED.

8. ANY POWER SHUTDOWN SHALL BE COORDINATED WITH CITY OF DALY CITY COORDINATOR. A SHUTDOWN SCHEDULE SHALL BE PRESENTED TO CITY OF DALY CITY FOR APPROVAL TWO WEEKS PRIOR TO COMMENCEMENT OF WORK. SHUTDOWN SHALL BE PERFORMED IN OVERTIME HOURS IF SO DIRECTED BY SAN MATEO COUNTY.

9. ALL FEEDER AND BRANCH CIRCUIT CONDUITS SHALL BE INSTALLED CONCEALED IN FINISHED AREA, UNLESS OTHERWISE NOTED. CUT AND PATCH (E) WALL OR CEILING AS REQUIRED.

10. ALL PENETRATIONS THROUGH FIRE RESISTIVE WALLS SHALL BE TOTALLY SEALED TO PREVENT THE SPREAD OF SMOKE, FIRE, TOXIC GASES, AND WATER THROUGH THE PENETRATION BEFORE, DURING AND AFTER A FIRE CONDITION. THE FIRE RATING OF THE SEALED PENETRATION SHALL BE AT LEAST THAT OF THE WALL INTO WHICH IT IS INSTALLED. THE SEAL SHALL PERMIT THE VIBRATION, EXPANSION AND/OR CONTRACTION OF THE CONDUIT PASSING THROUGH THE PENETRATION WITHOUT THE SEAL CRACKING OR CRUMBLING.

19. UNLESS OTHERWISE INDICATED, THE MINIMUM SIZE OF CONDUCTORS SHALL BE 12 AWG THWN STRANDED COPPER ONL.Y.

20. UNLESS OTHERWISE INDICATED, THE MINIMUM SIZE OF CONDUIT SHALL BE 3/4".

21. GREEN INSULATED GROUND CONDUCTORS SHALL BE INSTALLED IN ALL FEEDER AND BRANCH CIRCUIT WIRING.

22. PROVIDE LABELS ON ALL EQUIPMENT AND DEVICES. LABELS SHALL BE SELF-ADHESIVE PHENOLIC TYPE AND WHITE LETTER ON BLACK BACKGROUND, PROVIDE BRADY OR DYMO TYPE LABELS (CIRCUIT IDENTIFICATION) FOR ALL SWITCHES AND RECEPTACLES.

23. THE CONTRACTOR SHALL PROVIDE TYPEWRITTEN DIRECTORIES FOR ALL ELECTRICAL PANELS INVOLVED IN THIS PROJECT. THE PANEL DIRECTORIES SHALL REFLECT THE AS-BUILT CIRCUITS. ONE COPY OF THE SCHEDULE SHALL BE TAPED TO THE INSIDE OF THE PANEL DOOR, AND ONE COPY SHALL BE SUBMITTED TO THE ENGINEER AS AN "AS-BUILT" DRAWING.

24. ALL ELECTRICAL EQUIPMENT SHALL BE BRACED OR ANCHORED TO RESIST A HORIZONTAL FORCE ACTING IN ANY DIRECTION PER CBC REQUIREMENTS.

29. WHERE CONDUIT IS ROUTED ON ROOF STRUCTURES, PROVIDE REDWOOD BLOCKING AND STRAP 10'-0" O.C. MAXIMUM.

30. ALL EXPOSED CONDUIT BELOW 7'-0" SHALL BE RSC OR IMC AND ALL EXPOSED HARDWARE SHALL BE "HOT DIPPED" GALVANIZED. ALL INTERIOR CONDUITS MAY BE EMT, UNLESS OTHERWISE NOTED.

32. GENERALLY, HORIZONTAL RUNS SHALL BE INSTALLED ON THE CORNER BELOW CEILING LINE AS APPROVED BY THE ENGINEER.

33. UPON COMPLETION OF CONSTRUCTION, PAINT ALL EXPOSED ELECTRICAL CONDUITS, DEVICES AND BOXES. PAINT COLOR SHALL MATCH THE EXISTING SURFACES.

34. THE CONTRACTOR SHALL MAINTAIN AT THE JOB SITE, AN UP TO DATE "AS BUILT" DRAWING SET. THE "AS BUILT" DRAWING SET SHALL REFLECT ALL APPROVED CHANGES TO THE DESIGN DRAWINGS. THE "AS BUILT" DRAWING SET SHALL BE KEPT CLEAN AND IN GOOD CONDITION AND SHALL BE TURNED OVER TO THE OWNER AT THE COMPLETION OF THE PROJECT.

35. UPON COMPLETION OF THE WORK, THE CONTRACTOR SHALL SCHEDULE AND PERFORM A COMPLETE FUNCTIONAL TEST IN THE PRESENCE OF IOR TO DEMONSTRATE TO THE OWNER THAT THE NEW INSTALLATION IS OPERATING AS INTENDED TEST RESULTS SHALL BE SENT TO THE OWNER. ANY DEFECTS OR DEFICIENCIES IN THE MATERIALS OR WORK SHALL BE CORRECTED IMMEDIATELY BY AND AT THE CONTRACTOR'S EXPENSE.

LEGEND

- HOMERUN TO PANEL, HASHMARKS INDICATE NUMBER OF #12 AWG WIRES IF MORE THAN (3); (|) INDICATES GROUND.
- FLEXIBLE WIRING AND EQUIPMENT CONNECTION.
- CONDUIT AND CONDUCTORS CONCEALS IN WALL OR CEILING
- CONDUIT AND WIRES CONCEALED IN FLOOR OR UNDERGROUND
- CONDUIT STUBBED OUT IN ACCESSIBLE LOCATION, CAP AND MARK LOCATION
- CONDUIT RISER
- SURFACE MOUNTED ELECTRICAL PANELBOARD
- RECESSED MOUNTED ELECTRICAL PANELBOARD
- HASHMARK INDICATES EXISTING ELECTRICAL ITEM TO BE DISCONNECTED AND REMOVED. REMOVE WIRES UP TO SOURCE AND UTILIZE (E) CONDUIT FOR (N) WORK.
- DUPLEX RECEPTACLE NEMA 5-20R, 20 AMP, 120V, +18" A.F.F U.O.N.
- J — JUNCTION BOX OR PULL BOX, SIZE PER CODE.
- J — FLOOR BOX
- DATA RECEPTACLE
- COMBINATION DATA AND POWER FLOOR RECEPTACLE
- COMBINATION DATA AND TELEPHONE RECEPTACLE, PROVIDE 3/4"C AND TERMINATE 6" ABOVE CEILING
- 2'x4' LIGHT FIXTURE
- EXIT LIGHTS
- OS — MULTI-TECHNOLOGY CEILING MOUNTED OCCUPANCY SENSOR, LEVITON CAT #OSC20-MOW
- 1 — SHEET NOTE REFERENCE, SEE NOTE 1
- 1/E3.1 — DETAIL TAG. REFER TO DETAIL 1 ON SHEET NUMBER E3.1
- $3 — 3-WAY SWITCH, 15A/120V
- $DX — NPODM DX [COLOR]
  1 CHANNEL ON/OFF TOGGLE WITH DIMMING
- OS A — nCM PDT 9
  SENSORSWITCH nLIGHT CEILING MOUNT LOW VOLTAGE STANDARD RANGE / HIGH SENSITIVITY 360° DUAL TECHNOLOGY (DIGITAL PIR + MICROPHONICS) OCCUPANCY SENSOR.
- PP PL — nPP16 PL T24
  SENSORSWITCH nLIGHT DIGITAL POWER PACK WITH INTEGRAL 16A RELAY. 120/277VAC. CHASE NIPPLE MOUNT. PROVIDES UP TO 40mA BUS CURRENT PER PORT. FOR RECEPTACLE LOADS TRACKING OCCUPANCY.
- PP — nPP16D
  POWER RELAY PACK:
  16A, 120/277VAC W/O-10VDC DIMMING

DRAWING INDEX

E0.1	GENERAL NOTES, LEGEND, ABBREVIATIONS AND DRAWING INDEX
E0.2	ELECTRICAL SPECIFICATION
E0.3	CERTIFICATE OF COMPLIANCE TITLE 24
E1.1	LIGHTING PLAN
E2.1	POWER PLAN
E3.1	SINGLE LINE DIAGRAM, SCHEDULES AND DETAILS

LIST OF APPLICABLE CODES

1. 2016 CALIFORNIA BUILDING STANDARDS ADMINISTRATIVE CODE (PART 1, TITLE 24, CCR)
2. 2016 CALIFORNIA BUILDING CODE (CBC), VOLUMES 1 & 2 (PART 2, TITLE 24, CCR)
3. 2016 CALIFORNIA ELECTRICAL CODE (PART 3, TITLE 24, CCR)
4. 2016 CALIFORNIA MECHANICAL CODE (PART 4, TITLE 24, CCR)
5. 2016 CALIFORNIA PLUMBING CODE (PART 5, TITLE 24, CCR)
6. 2016 CALIFORNIA FIRE CODE (PART 9, TITLE 24, CCR)
7. 2016 CALIFORNIA REFERENCE STANDARDS CODE (PART 12, TITLE 24, CCR)
8. NFPA 72, 2016 EDITION, NATIONAL FIRE ALARM CODE, AS AMENDED

ABBREVIATIONS

A AMP	AMPERE
AFF	ABOVE FINISHED FLOOR
AP	ACCESS POINT
BRKR	BREAKER
C	CONDUIT, CLOCK
CBC	CALIFORNIA BUILDING CODE
CCTV	CLOSED CIRCUIT TELEVISION
CEC	CALIFORNIA ELECTRIC CODE
CKT	CIRCUIT
CO	CONDUIT ONLY WITH PULL ROPE
CSC	CLOCK/SPEAKER CABINET
(E)	EXISTING
FU	FUSE
G	GROUND, GUARD
GFCII	GROUND FAULT CIRCUIT INTERRUPTER
IDF	INTERMEDIATE DISTRIBUTION FRAME
LCP	LIGHTING CONTROL PANEL
MAX	MAXIMUM
MDF	MAIN DISTRIBUTION FRAME
MIN	MINIMUM
MPOE	MAIN POINT OF ENTRY
MSTC	MAIN SIGNAL TELEPHONE CABINET
MTB	MAIN TELEPHONE BOARD
NEC	NATIONAL ELECTRICAL CODE
NL	NIGHT LIGHT
NTS	NOT TO SCALE
O.C.	ON CENTER
PH, Ø	PHASE
PNL	PANEL
(R) RECEPT.	RELOCATED RECEPTACLE
SAD	SEE ARCHITECTURAL DRAWINGS
SBC	SOUTHERN BELL COMMUNICATIONS
TRANSF.	TRANSFORMER
TB	TELEPHONE BOARD
TC	TERMINAL CAN
TYP	TYPICAL
UON	UNLESS OTHERWISE NOTED
V	VOLT
VD	VOLTAGE DROP
W	WATT
WG	WIRE GUARD
WP	WEATHERPROOF
XFMR	TRANSFORMER

GENERAL NOTES, LEGEND, ABBREVIATIONS AND DRAWING INDEX

KRJ Design Group
650.525.3700
11 Twenty-fourth Ave.
San Mateo, CA 94403

Alliance Engineering Consultants, Inc.
4701 Patrick Henry Drive, Bldg. 10
Santa Clara, CA 95054
phone (408) 970-9888
fax (408) 970-9316
www.aec-engineers.com
PROJECT NO. 110-17-01

REGISTERED PROFESSIONAL ENGINEER
KENNETH S. NGAI
No. 11537
Exp. 6/30/19
ELECT.
STATE OF CALIFORNIA

BHRS NORTH COUNTY YOUTH TEAM
OFFICE REMODEL
350 90TH STREET
DALY CITY, CA
94080

PROPOSED PLAN REVIEWED & APPROVED	
DATE	
SCALE: AS NOTED	DRWN BY: TH
DATE: 6/16/17	SQ. FT.: -
FLOOR: SECOND	PROJ. NO.: KRJ350-90TH

REVISIONS

NO.	DATE/DESCRIPTION	BY
	-	
	-	

THIS CAD DOCUMENT IS PROPERTY OF KRJ DESIGN GROUP, LOCATED AT 11 TWENTY-FOURTH AVE., SAN MATEO, CA. THIS IS FOR KRJ INTERNAL USE ONLY. REMOVAL AND/OR DELETION OF THIS NOTICE IS PROHIBITED AND UNLAWFUL. KRJ REPRESENTS THIS DOCUMENT TO BE FOR INTERNAL USE ONLY UNLESS OTHERWISE SPECIFIED. THE INFORMATION HERE WAS GATHERED BY KRJ STAFF OR REPRESENTED TO BE CORRECT BY OWNER AND/OR AGENT. THE USE OF THIS DOCUMENT IS INTENDED FOR INTERNAL USE ONLY AS A REFERENCE DOCUMENT. THIS DOCUMENT IS NOT TO BE MODIFIED IN ANY WAY WITHOUT WRITTEN AUTHORIZATION FROM KRJ DESIGN GROUP OR ITS SUBSIDIARIES.

WE CANNOT ACCEPT RESPONSIBILITY FOR DIMENSIONS TAKEN FROM BLUEPRINTS SUPPLIED BY CLIENT/ARCHITECT.

ON SITE DIMENSIONS HAVE NOT BEEN TAKEN. VERIFICATION REQUIRED PRIOR TO BUILDOUT OR ORDER BY:

SHEET NO.
E0.1
1 OF 6 SHEETS

FILE: M:\110-17-01 BHRS County Youth Team\01E01.dwg Jun 15, 2017 2:40 pm Scale: 1=1 by: TRANG
XREFS: BHRS_BDR.dwg

ELECTRICAL SPECIFICATION

Section 16000

PART 1 GENERAL

1.01 SCOPE

A. The scope of work shall include all labor, materials, equipment and services necessary for the complete installation of all electrical work as herein specified and as shown on the Drawings, including, but not limited to the following:

1. Power circuits to all equipment and devices.
2. Wiring devices, necessary conduit, wiring and interconnections
3. All necessary cutting, patching, trenching and backfilling.
4. Painting, labeling and equipment identification as specified.
5. Test the complete work. Correct any deficiencies to the satisfaction of the Owner or his designated representative.

1.02 PRODUCT HANDLING

A. Contractor shall be responsible for delivery, storage, protection and placing of all equipment and materials.

B. Protection: Contractor shall protect from damage during construction, work and materials of other trades as well as electrical work and material. Electrical equipment stored and installed on job site shall be protected from dust, water, or any other damage.

1.03 RULES AND REGULATIONS

A. All work and materials shall be in full accordance with regulations of the California Administrative Code, Title 24, State Building Standards, National Electrical Code, Local City and County Code, applicable regulations of local utility companies, and any other applicable laws or regulations.
B. Nothing in these specifications is to be construed to permit work not conforming to the above codes.
C. Drawings and/or specifications shall take precedence when work and material called for exceed code requirements.

1.04 DRAWINGS AND SPECIFICATIONS

A. Any error or omissions of detail in either Drawings or Electrical Specifications shall not relieve Contractor from correctly installing all materials necessary for complete and operating electrical systems.
B. Locate and install all equipment so that it will be readily accessible for operation and maintenance.

1.05 MATERIAL AND EQUIPMENT

A. Unless otherwise noted, all material and equipment shall be new, of the type, capacity and quality specified and free from defects. Material shall bear the label of, or be listed by the Underwriter's Laboratories unless of a type for which label or listing service is not provided.
B. Materials shall be of the same brand or manufacturer throughout for each class of material or equipment wherever possible.

1.06 SUBMITTALS

A. Forward all submittals in related groups. Individual or incomplete submittals are not acceptable. Submit six copies of shop drawings for the following items:
1. Conduits and wires
2. Wiring devices.

1.07 SITE EXAMINATION

A. Examine the site and premises prior to bidding to determine the conditions under which the work is to be performed. No allowances will be made for extra expenses incurred due to failure to examine the premises or to discover site conditions which affect the work.

1.08 WORKMANSHIP

A. Good workmanship shall be evidenced in the installation of all electrical materials and equipment. Equipment shall be level, plumb and true with the structure and other equipment. All materials shall be firmly secured in place and adequately supported and permanent. The requirements of the codes are minimum standards.
B. Work covered or concealed before being inspected and approved shall be opened and uncovered upon request without any cost to the Owner and/or the Architect.

1.09 MANUFACTURER'S DIRECTIONS

A. Follow manufacturer's directions where these directions cover points not included on the Drawings or in the Specifications.

1.10 DEMOLITION

A. Provideas required to accommodate new work called for and as noted. Work shall be done carefully to avoid damage to surfaces not being replaced.

1.11 SERVICE INTERRUPTIONS

A. The facility shall remain in operation during the period of construction. Interruption of power service, if required, shall be done on weekends or nightshift hours with no added expense to the Owner. Any interruptions must be scheduled in writing with the Owner, forty-eight (48) hours in advance and must meet with their approval.

1.12 AS- BUILT DRAWINGS

A. The Contractor shall furnish one set of clean "AS-BUILT" marked blue line prints to the Owner at completion of the project showing all work including the circuiting.

1.13 GUARANTEE

A. The Contractor shall guarantee that all work executed under this Section will be free from defects of materials and workmanship for a period of one year from the date of final acceptance of this work and further guarantee that he will, at his own expense, repair and replace all such defective work, and all other work damaged thereby, which becomes defective during the term of the guarantee.

PART 2 PRODUCTS

2.01 MATERIALS

A. Unless otherwise noted, all material and equipment shall be new, of the type, capacity and quality specified and free from defects. Material shall bear the label of, or be listed by, the Underwriter's Laboratories unless of a type for which label of listing service is not provided.
B. Materials shall be of the same brand or manufacturer throughout for each class of material or equipment wherever possible.
C. Equipment shall be the product of a manufacturer who has, for a period of not less than five (5) years, been in successful manufacture of the equipment and who has a nationally distributed catalog covering ratings and specifications of said equipment.

2.02 RACEWAY

A. All conduits installed indoors shall be electrical metallic tubing (EMT) with compression type fittings. Conduits exposed outdoors shall be rigid steel. Raceway exposed or other finished areas shall be Wiremold or equal. Underground conduit shall be schedule 40 PVC.

B. Conduits shall be 3/4 inch minimum in size.

2.03 CONDUCTORS

A. All conductors shall be in conduit. Minimum size shall be #12 AWG.
B. Color code all branch circuits and feeders as follows:

120/208 Volts		277/480 Volts	
Phase A	Black	Phase A	Brown
Phase B	Red	Phase B	Orange
Phase C	Blue	Phase C	Yellow
Neutral	White	Neutral	Gray
Ground	Green	Ground	Green

C. Conductors in sizes up through #10 AWG shall have solid color finish as listed above.
D. Color coding shall be continuous and consistent throughout the work.
E. All insulation shall be 600V minimum type THHN/THWN.
F. Conductors shall be copper, 98% conductivity.
G. All conductors shall be identified and tagged at all electrical panels, pullboxes, devices and termination points with Partex PA sleeve type markers.
H. Splices: For conductors #10 and smaller, pre-insulated type connectors, 3M Scotchloks, T & B Piggys or equal, nylon self-insulated type. Splices #8 and larger use compression type connector, insulated with Scotchtape No. 88. Wire splicing devices shall be sized according to manufacturer's recommendations.
I. Cable Ties: For wire training and clamping in cabinets and enclosures use nylon cable ties.
J. Swab conduits before installing cables, and exercise care in pulling to avoid damage or disarrangement of conductors, use approved grips.

2.04 BOXES

A. Shall be of size and shape best suited for particular application, properly code sized for number of wires and conduits passing through or terminating therein. Support boxes directly to structural members, framing or blocking by means of screws, anchors or bolts.

2.05 MOTOR DISCONNECT SWITCH

A. Motor disconnect switch shall be heavy duty type HD, fused, fully enclosed, Nema 1 for indoor installation and Nema 3R for outdoor installation . The fused disconnect switch shall be provided with resection clips and fuses rated as required by the manufacturer of the equipment that is to disconnect.
B. Switch shall be provided with a cover interlock to prevent opening of the switch door when switch is in the "on" position, means of defeating the interlock mechanism shall be provided to allow authorized personnel to access the switch interior with the switch in the on position.

2.06 SUPPORT SYSTEMS

A. As manufactured by Unistrut, Kindorf or Power strut.
B. Clamp, one hole malleable iron.

2.07 GROUNDING SYSTEMS

A. Acceptable device manufacturer's: Burndy, O.Z., Appleton and "Erico" Caldwell.
B. Install ground wire in all feeder and branch circuit conduits.

PART 3 EXECUTION

3.01 COORDINATION

A. Coordinate work with that of all contractors on the job for an efficient and effective completion of the project. Refer to the contract documents of other trades for construction details.

3.02 WORKING SPACE

A. Adequate working space shall be provided around electrical equipment in strict compliance with the N.E.C. and Electrical Safety Orders.

3.03 GROUNDING

A. Permanently and effectively ground all services, raceway systems, supports, and utilization apparatus. Obtain good contact between conduit, tubing and fittings, cabinets, outlet boxes, and equipment.
B. Provide grounding conductor inside all conduits.

3.04 RACEWAY INSTALLATION

A. Exposed raceways shall run parallel or at right angles to wall or ceiling.
B. Paint all exposed conduits, Wiremold and boxes to match existing architectural finishes.

3.05 MOTOR DISCONNECT SWITCH INSTALLATION

A. Motor disconnect switch shall be installed near the motor that is disconnect.
B. Disconnect switch shall be mounted on building wall or on steel channel structures as required for each particular equipment.
C. Provide nameplate indicating panel and circuit designation. Nameplate shall be phenolic, black face with white core.
D. Fuses for motors shall be dual element time delay type.

3.06 WIRING, EMERGENCY SYSTEM

A. Wiring from an emergency source or emergency source distribution overcurrent protection to emergency loads shall be kept entirely independent of all other wiring and equipment.
B. Identification of all boxes and enclosures for emergency circuits shall be permanently marked so they will be readily identified as a component of emergency circuit or system.

3.07 TESTS

A. Test all wiring and connections for continuity and grounds before the equipment are connected and where such tests indicate faulty insulation or other defects, they shall be located, repaired and tested again. Electrical loads shall be balanced at the panelboard.

KRJ Design Group

650.525.3700
11 Twenty-fourth Ave.
San Mateo, CA 94403

Alliance Engineering Consultants, Inc.
4701 Patrick Henry Drive, Bldg. 10
Santa Clara, CA 95054
phone (408) 970-0888
fax (408) 970-0218
www.aec-engineers.com

PROJECT NO. 110-17-01

REGISTERED PROFESSIONAL ENGINEER
KENNETH S. JAGAI
No. 11537
Exp. 6/30/17
ELECT.
STATE OF CALIFORNIA

BHRS NORTH COUNTY YOUTH TEAM
OFFICE REMODEL
350 90TH STREET
DALY CITY, CA
94080

PROPOSED PLAN REVIEWED & APPROVED

DATE

SCALE AS NOTED	DRWN BY TH
DATE 6/16/17	SQ. FT. –
FLOOR SECOND	PROJ. NO. KRJ350-90TH

REVISIONS

NO.	DATE/DESCRIPTION	BY
	–	
	–	

THIS CAD DOCUMENT IS PROPERTY OF KRJ DESIGN GROUP, LOCATED AT 11 TWENTY-FOURTH AVE., SAN MATEO, CA. THIS IS FOR KRJ INTERNAL USE ONLY. REMOVAL AND/OR DELETION OF THIS NOTICE IS PROHIBITED AND UNLAWFUL. KRJ REPRESENTS THIS DOCUMENT TO BE FOR INTERNAL USE ONLY UNLESS OTHERWISE SPECIFIED. THE INFORMATION HEREIN WAS GATHERED BY, OR WAS SUPPLIED OR REPRESENTED TO BE ACCURATE BY, KRJ DESIGN GROUP AT THE USE OF THIS DOCUMENT IS INTENDED FOR INTERNAL USE ONLY AS A REFERENCE DOCUMENT. THIS DOCUMENT IS NOT TO BE MODIFIED IN ANY WAY WITHOUT WRITTEN AUTHORIZATION FROM KRJ DESIGN GROUP OR ITS SUBSIDIARIES.

WE CANNOT ACCEPT RESPONSIBILITY FOR DIMENSIONS TAKEN FROM BLUEPRINTS SUPPLIED BY CLIENT/ARCHITECT.

ON SITE DIMENSIONS HAVE NOT BEEN TAKEN. VERIFICATION REQUIRED PRIOR TO BUILDOUT OR ORDER BY:

SHEET NO.

E0.2

2 OF 8 SHEETS

STATE OF CALIFORNIA
INDOOR LIGHTING
CEC-NRCC-LTI-01-E (Revised 02/15) — CALIFORNIA ENERGY COMMISSION

CERTIFICATE OF COMPLIANCE	NRCC-LTI-01-E
Indoor Lighting	(Page 1 of 6)
Project Name: BHRS NORTH COUNTY YOUTH TEAM OFFICE REMODEL	Date Prepared: 6/16/2017

A. General Information

Climate Zone: 3	Conditioned Floor Area: 738				
	Unconditioned Floor Area: 0				
Building Type:	☐ Nonresidential	☐ High-Rise Residential		☐ Hotel/Motel	
☐ Schools	☐ Relocatable Public Schools	☑ Conditioned Spaces		☐ Unconditioned Spaces	
Phase of Construction:	☐ New Construction	☐ Addition		☑ Alteration	
Method of Compliance:	☑ Complete Building	☐ Area Category		☐ Tailored	
Project Address: 350 90TH STREET					

B. Lighting Compliance Documents (select yes for each document included)

For detailed instructions on the use of this and all Energy Efficiency Standards compliance documents, refer to the Nonresidential Manual published by the California Energy Commission.

YES	NO	COMP. DOC.	TITLE
☑	☐	NRCC-LTI-01-E	Certificate of Compliance. All Pages required on plans for all submittals.
☑	☐	NRCC-LTI-02-E	Lighting Controls, Certificate of Compliance, and PAF Calculations. All Pages required on plans for all submittals.
☑	☐	NRCC-LTI-03-E	Indoor Lighting Power Allowance
☐	☑	NRCC-LTI-04-E	Tailored Method Worksheet
☐	☑	NRCC-LTI-05-E	Line Voltage Track Lighting Worksheet
☐	☐	NRCC-LTI-06-E	Indoor Lighting Existing Conditions

STATE OF CALIFORNIA
INDOOR LIGHTING
CEC-NRCC-LTI-01-E (Revised 02/15) — CALIFORNIA ENERGY COMMISSION

CERTIFICATE OF COMPLIANCE	NRCC-LTI-01-E
Indoor Lighting	(Page 2 of 6)
Project Name: BHRS NORTH COUNTY YOUTH TEAM OFFICE REMODEL	Date Prepared: 6/16/2017

C. Summary of Allowed Lighting Power

Conditioned and Unconditioned space lighting must not be combined for compliance

	Indoor Lighting Power for Conditioned Spaces		Watts		Indoor Lighting Power for Unconditioned Spaces		Watts
01	**Installed** Lighting NRCC-LTI-01-E, Table H, page 3	+	711		**Installed** Lighting NRCC-LTI-01-E, Table H, page 3	+	0
02	Portable Only for Offices NRCC-LTI-03-E, Table G, page 4	+					
03	Minus Lighting Control Credits NRCC-LTI-02-E, page 2	-	213		Minus Lighting Control Credits NRCC-LTI-02-E, page 2	-	0
04	Adjusted **Installed** Lighting Power (row 1 plus row 2 minus row 3)	=	498		Adjusted **Installed** Lighting Power (row 1 minus row 3)	=	0
	Complies ONLY if **Installed ≤ Allowed** (Box 04 < Box 03)				Complies ONLY if **Installed ≤ Allowed** (Box 04 < Box 03)		
05	**Allowed** Lighting Power Conditioned NRCC-LTI-03-E, page 1		590		**Allowed** Lighting Power Unconditioned NRCC-LTI-03-E, page 1		0
	Alterations with replacement luminaires that have at least 50/35% lower power compared to the original existing luminaires, may instead use the allowed wattage from NRCC-LTI-05, page 2				Alterations with replacement luminaires that have at least 50/35% lower power compared to the original existing luminaires, may instead use the allowed wattage from NRCC-LTI-05, page 2		

D. Declaration of Required Certificates of Installation

Declare by selecting yes for all of the Certificates that will be submitted. (Retain copies and verify forms are completed and signed.)

YES	NO	Compliance Document/Title	
☑	☐	NRCI-LTI-01-E - Must be submitted for all buildings	☐ Field Inspector
☐	☑	NRCI-LTI-02-E - Must be submitted for a lighting control system, or for an Energy Management Control System (EMCS), to be recognized for compliance.	☐ Field Inspector
☐	☑	NRCI-LTI-03-E - Must be submitted for a line-voltage track lighting integral current limiter, or for a supplementary overcurrent protection panel used to energize only line-voltage track lighting, to be recognized for compliance.	☐ Field Inspector
☐	☑	NRCI-LTI-04-E - Must be submitted for two interlocked systems serving an auditorium, a convention center, a conference room, a multipurpose room, or a theater to be recognized for compliance.	☐ Field Inspector
☑	☐	NRCI-LTI-05-E - Must be submitted for a Power Adjustment Factor (PAF) to be recognized for compliance.	☐ Field Inspector
☐	☑	NRCI-LTI-06-E - Must be submitted for additional wattage installed in a video conferencing studio to be recognized for compliance.	☐ Field Inspector

STATE OF CALIFORNIA
INDOOR LIGHTING
CEC-NRCC-LTI-01-E (Revised 02/15) — CALIFORNIA ENERGY COMMISSION

CERTIFICATE OF COMPLIANCE	NRCC-LTI-01-E
Indoor Lighting	(Page 3 of 6)
Project Name: BHRS NORTH COUNTY YOUTH TEAM OFFICE REMODEL	Date Prepared: 6/16/2017

E. Declaration of Required Certificates of Acceptance

Declare by selecting yes for all of the Certificates that will be submitted. (Retain copies and verify forms are completed and signed.)

YES	NO	Compliance Document/Title	
☑	☐	NRCA-LTI-02-A - Must be submitted for occupancy sensors and automatic time switch controls.	☐ Field Inspector
☐	☑	NRCA-LTI-03-A - Must be submitted for automatic daylight controls.	☐ Field Inspector
☐	☑	NRCA-LTI-04-A - Must be submitted for demand responsive lighting controls.	☐ Field Inspector
☐	☑	NRCA-LTI-05-A - Must be submitted for institutional tuning power adjustment factor (PAF).	☐ Field Inspector

A Separate Lighting Schedule Must Be Filled Out for Conditioned and Unconditioned Spaces. Installed Lighting Power listed on this Lighting Schedule is only for:

☑ **CONDITIONED SPACE** ☐ **UNCONDITIONED SPACE**

F. Indoor Lighting Schedule and Field Inspection Energy Checklist

☐ The actual indoor lighting power listed on the next 2 pages includes all installed permanent and planned portable lighting systems.
☐ When Complete Building Method is used for compliance, list each different type of luminaire on separate lines.
☐ When Area Category Method or Tailored Method is used for compliance, list each different type of luminaire by each different function area on separate lines
☐ Also include track lighting in schedule, and submit the track lighting compliance document (NRCC-LTI-05-E) when line-voltage track lighting is installed.

STATE OF CALIFORNIA
INDOOR LIGHTING
CEC-NRCC-LTI-01-E (Revised 02/15) — CALIFORNIA ENERGY COMMISSION

CERTIFICATE OF COMPLIANCE	NRCC-LTI-01-E
Indoor Lighting	(Page 4 of 6)
Project Name: BHRS NORTH COUNTY YOUTH TEAM OFFICE REMODEL	Date Prepared: 6/16/2017

A Separate Lighting Schedule Must Be Filled Out for Conditioned and Unconditioned Spaces. Installed Lighting Power listed on this Lighting Schedule is only for:

☑ **CONDITIONED SPACE** ☐ **UNCONDITIONED SPACE**

H. Indoor Lighting Schedule and Field Inspection Energy Checklist

Luminaire Schedule			Installed Watts				Location	Field Inspector [1]	
01	02	03	04		05	06	07	08	
Name or Item Tag	Complete Luminaire Description (i.e., 3 lamp fluorescent troffer, #32T8, one dimmable electronic ballast)	Watts per Luminaire	How wattage was determined: LED Exit Sign; Manufacturer's Data; According to Table 140.6-B	Number of Luminaires	Total Installed Watts (Watts x Nos.)	Primary Function area in which these luminaires are installed	Pass	Fail
A	3 Lamp 4 ft T8 Energy Saving Elec	79.0	☐ ☐ ☑	9	711	Comp Bldg Office	☐	☐
			☐ ☐ ☐				☐	☐
			☐ ☐ ☐				☐	☐
			☐ ☐ ☐				☐	☐
			☐ ☐ ☐				☐	☐
			☐ ☐ ☐				☐	☐
			☐ ☐ ☐				☐	☐
			☐ ☐ ☐				☐	☐
INSTALLED WATTS PAGE TOTAL:					711	Enter sum total of all pages into NRCC-LTI-01-E; Page 2		

STATE OF CALIFORNIA
INDOOR LIGHTING
CEC-NRCC-LTI-01-E (Revised 02/15) — CALIFORNIA ENERGY COMMISSION

CERTIFICATE OF COMPLIANCE	NRCC-LTI-01-E
Indoor Lighting	(Page 6 of 6)
Project Name: BHRS NORTH COUNTY YOUTH TEAM OFFICE REMODEL	Date Prepared: 6/16/2017

DOCUMENTATION AUTHOR'S DECLARATION STATEMENT

1. I certify that this Certificate of Compliance documentation is accurate and complete.

Documentation Author Name:	DOAN TRANG HOANG	Documentation Author Signature:	Doan Trang Hoang
Company:	Alliance Engineering Consultants, Inc	Signature Date:	6/16/2017
Address:	4701 PATRICK HENRY DRIVE, BLDG 10	CEA Certification Identification (if applicable):	
City/State/Zip:	SANTA CLARA, CA 95054	Phone:	408-970-9888

RESPONSIBLE PERSON'S DECLARATION STATEMENT

I certify the following under penalty of perjury, under the laws of the State of California:
1. The information provided on this Certificate of Compliance is true and correct.
2. I am eligible under Division 3 of the Business and Professions Code to accept responsibility for the building design or system design identified on this Certificate of Compliance (responsible designer).
3. The energy features and performance specifications, materials, components, and manufactured devices for the building design or system design identified on this Certificate of Compliance conform to the requirements of Title 24, Part 1 and Part 6 of the California Code of Regulations.
4. The building design features or system design features identified on this Certificate of Compliance are consistent with the information provided on other applicable compliance documents, worksheets, calculations, plans and specifications submitted to the enforcement agency for approval with this building permit application.
5. I will ensure that a completed signed copy of this Certificate of Compliance shall be made available with the building permit(s) issued for the building, and made available to the enforcement agency for all applicable inspections. I understand that a completed signed copy of this Certificate of Compliance is required to be included with the documentation the builder provides to the building owner at occupancy.

Responsible Designer Name:	KENNETH S. NGAI	Responsible Designer Signature:	KS Ngai
Company:	ALLIANCE ENGINEERING CONSULTANTS, INC.	Date Signed:	6/16/2017
Address:	4701 PATRICK HENRY DRIVE, BLDG 10	License:	E11537
City/State/Zip:	SANTA CLARA, CA 95054	Phone:	408-970-9888

STATE OF CALIFORNIA
INDOOR LIGHTING – LIGHTING CONTROLS
CEC-NRCC-LTI-02-E (Revised 02/15) — CALIFORNIA ENERGY COMMISSION

CERTIFICATE OF COMPLIANCE	NRCC-LTI-02-E
Indoor Lighting - Lighting Controls	(Page 1 of 3)
Project Name: BHRS NORTH COUNTY YOUTH TEAM OFFICE REMODEL	Date Prepared: 6/16/2017

A. Mandatory Lighting Control Declaration Statements (Indicate if the measure applies by checking yes or no below.)

YES	NO	Control Requirements
☐	☑	Lighting shall be controlled by self-contained lighting control devices which are certified to the Energy Commission according to the Title 20 Appliance Efficiency Regulations in accordance with Section 110.9.
☐	☑	Lighting shall be controlled by a lighting control system or energy management control system in accordance with §110.9. An Installation Certificate shall be submitted in accordance with Section 130.4(b).
☐	☑	One or more Track Lighting Integral Current Limiters shall be installed which have been certified to the Energy Commission in accordance with §110.9 and §130.0. Additionally, an Installation Certificate shall be submitted in accordance with Section 130.4(b).
☐	☑	A Track Lighting Supplementary Overcurrent Protection Panel shall be installed in accordance with Section 110.9 and Section 130.0. Additionally, an Installation Certificate shall be installed in accordance with Section 130.4(b).
☐	☐	All lighting controls and equipment shall comply with the applicable requirements in §110.9 and shall be installed in accordance with the manufacturer's instructions in accordance with Section 130.1.
☐	☐	All luminaires shall be functionally controlled with manually switched ON and OFF lighting controls in accordance with Section 130.1(a).
☐	☑	General lighting shall be separately controlled from all other lighting systems in an area. Floor and wall display, window display, case display, ornamental, and special effects lighting shall each be separately controlled on circuits that are 20 amps or less. When track lighting is used, general, display, ornamental, and special effects lighting shall each be separately controlled; in accordance with Section 130.1(a)4.
☐	☐	The general lighting of any enclosed area 300 square feet or larger, with a connected lighting load that exceeds 0.5 watts per square foot shall meet the multi-level lighting control requirements in accordance with Section 130.1(b).
☐	☐	All installed indoor lighting shall be equipped with controls that meet the applicable Shut-OFF control requirements in Section 130.1(c).
☐	☑	Lighting in all Daylit Zones shall be controlled in accordance with the requirements in Section 130.1(d) and daylit zones are shown on the plans.
☐	☐	Lighting power in buildings larger than 10,000 square feet shall be capable of being automatically reduced in response to a Demand Responsive Signal in accordance with Section 130.1(e).
☐	☐	Before an occupancy permit is granted for a newly constructed building or area, or a new lighting system serving a building, area, or site is operated for normal use, indoor lighting controls serving the building, area, or site shall be certified as meeting the Acceptance Requirements for Code Compliance in accordance with Section 130.4.(a). The controls required to meet the Acceptance Requirements include automatic daylight controls, automatic shut-OFF controls, and demand responsive controls.

STATE OF CALIFORNIA
INDOOR LIGHTING – LIGHTING CONTROLS
CEC-NRCC-LTI-02-E (Revised 02/15) — CALIFORNIA ENERGY COMMISSION

CERTIFICATE OF COMPLIANCE	NRCC-LTI-02-E
Indoor Lighting - Lighting Controls	(Page 2 of 3)
Project Name: BHRS NORTH COUNTY YOUTH TEAM OFFICE REMODEL	Date Prepared: 6/16/2017

A separate document must be filled out for Conditioned and Unconditioned Spaces. This page is used only for the following:
☑ CONDITIONED SPACES ☐ UNCONDITIONED SPACES

B. Mandatory and Prescriptive Indoor Lighting Control Schedule, PAF Calculation, and Field Inspection Checklist

Lighting Control Schedule			Standards Complying With [1] (✓ all that apply, or enter 'F' if Exempted)								PAF Credit Calculation [2]				
01	02	03	04	05	06	07	08	09	10	11	12	13	14	15	
Location in Building	Type/Description of Lighting Control (i.e.: occupancy sensor, automatic time switch, dimmer, automatic daylight, etc.)	# of Units	§130.1(a)	§130.1(b)	§130.1(c)	§130.1(d)	§130.1(e)	§140.6(a)2	§140.6(d)	Watts of Controlled Lighting	PAF	Control Credit (4 x 1)	✓ if Acceptance Test Required	Field Inspector Pass	Field Inspector Fail
OFFICES	Multi Level	8	☐	☑	☐	☐	☐	☐					✓	☐	☐
OFFICES	Occupancy Sensor	8	☐	☐	☐	☐	☐	☐					✓	☐	☐
OFFICES	Occ Sensor - <= 250 sqft		☐	☐	☐	☐	☐	☐		711	0.30	213	✓	☐	☐
			☐	☐	☐	☐	☐	☐						☐	☐
			☐	☐	☐	☐	☐	☐						☐	☐
			☐	☐	☐	☐	☐	☐						☐	☐
Control Credit PAGE TOTAL (Sum of Column 13):												213			
IF MULTIPLE PAGES ARE USED, ENTER SUM TOTAL OF Control Credit for all pages HERE (Sum of all Column 13):												213			
												Enter Control Credit total into NRCC-LTI-01-E; Page 1			

1. §130.1(a) = Manual area controls; §130.0(b) = Multi Level; §130.1(c) = Auto Shut-Off; §130.1(d) = Mandatory Daylight; §130.1(e) = Demand Responsive; §140.6(d) = Additional lighting controls installed to earn a PAF; §140.6(d) = Prescriptive Secondary Sidelit Daylight Controls.
2. Check Table 140.6-A for correct Factor. PAFs shall not be traded between conditioned and unconditioned spaces. As a condition to earn a PAF, an Installation Certificate is also required to be filled out, signed, and submitted.

STATE OF CALIFORNIA
INDOOR LIGHTING – LIGHTING CONTROLS
CEC-NRCC-LTI-02-E (Revised 02/15) — CALIFORNIA ENERGY COMMISSION

CERTIFICATE OF COMPLIANCE	NRCC-LTI-02-E
Indoor Lighting - Lighting Controls	(Page 3 of 3)
Project Name: BHRS NORTH COUNTY YOUTH TEAM OFFICE REMODEL	Date Prepared: 6/16/2017

DOCUMENTATION AUTHOR'S DECLARATION STATEMENT

1. I certify that this Certificate of Compliance documentation is accurate and complete.

Documentation Author Name:	DOAN TRANG HOANG	Documentation Author Signature:	Doan Trang Hoang
Company:	Alliance Engineering Consultants, Inc	Signature Date:	6/16/2017
Address:	4701 PATRICK HENRY DRIVE, BLDG 10	CEA Certification Identification (if applicable):	
City/State/Zip:	SANTA CLARA, CA 95054	Phone:	408-970-9888

RESPONSIBLE PERSON'S DECLARATION STATEMENT

I certify the following under penalty of perjury, under the laws of the State of California:
1. The information provided on this Certificate of Compliance is true and correct.
2. I am eligible under Division 3 of the Business and Professions Code to accept responsibility for the building design or system design identified on this Certificate of Compliance (responsible designer).
3. The energy features and performance specifications, materials, components, and manufactured devices for the building design or system design identified on this Certificate of Compliance conform to the requirements of Title 24, Part 1 and Part 6 of the California Code of Regulations.
4. The building design features or system design features identified on this Certificate of Compliance are consistent with the information provided on other applicable compliance documents, worksheets, calculations, plans and specifications submitted to the enforcement agency for approval with this building permit application.
5. I will ensure that a completed signed copy of this Certificate of Compliance shall be made available with the building permit(s) issued for the building, and made available to the enforcement agency for all applicable inspections. I understand that a completed signed copy of this Certificate of Compliance is required to be included with the documentation the builder provides to the building owner at occupancy.

Responsible Designer Name:	KENNETH S. NGAI	Responsible Designer Signature:	KS Ngai
Company:	ALLIANCE ENGINEERING CONSULTANTS, INC.	Date Signed:	6/16/2017
Address:	4701 PATRICK HENRY DRIVE, BLDG 10	License:	E11537
City/State/Zip:	SANTA CLARA, CA 95054	Phone:	408-970-9888

STATE OF CALIFORNIA
INDOOR LIGHTING POWER ALLOWANCE
CEC-NRCC-LTI-03-E (Revised 02/15) — CALIFORNIA ENERGY COMMISSION

CERTIFICATE OF COMPLIANCE	NRCC-LTI-03-E
Certificate of Compliance - Indoor Lighting Power Allowance	(Page 1 of 4)
Project Name: BHRS NORTH COUNTY YOUTH TEAM OFFICE REMODEL	Date Prepared: 6/16/2017

A separate page must be filled out for Conditioned and Unconditioned Spaces. This page is only for:
☑ CONDITIONED spaces ☐ UNCONDITIONED spaces

A. SUMMARY TOTALS OF LIGHTING POWER ALLOWANCES

☐ If using Complete Building Method for compliance, use only the total in column (a) as total allowed building watts.
☐ If using Area Category Method, Tailored Method, or a combination of Area Category and Tailored Method for compliance, use only the total in column (b) as the total allowed building watts

	(a)		(b)
01 Complete Building Method Allowed Watts. Documented in section B of NRCC-LTI-03-E (below on this page)	590		
02 Area Category Method Allowed Watts. Documented in section C-1 of NRCC-LTI-03-E (below on this page)			
03 Tailored Method Allowed Watts. Documented in section A of NRCC-LTI-04-E			
TOTAL ALLOWED BUILDING WATTS. Enter number into correct cell on NRCC-LTI-01, Page 2, Row 1	590		

☐ Check here if building contains both conditioned and unconditioned areas.

B. COMPLETE BUILDING METHOD LIGHTING POWER ALLOWANCE

01	02		03		04
TYPE OF BUILDING (From §140.6 Table 140.6-B)	WATTS PER ft²	X	COMPLETE BLDG. AREA	=	ALLOWED WATTS
Comp Bldg Office	0.80		738		590
	Total Area				
Total Watts. Enter Total Watts into section A, row 1 (Above on this page)					

C-1 AREA CATEGORY METHOD TOTAL LIGHTING POWER ALLOWANCES	Watts
Total from section C-2:	
Total from section C-3:	
Total Watts. Enter Total Watts into section A, row 2 (Above on this page)	

For Alterations Only – Reduced lighting power option (Total Allowed Watts x 0.85). Enter this value into section A, row 2 if using this option.

STATE OF CALIFORNIA
INDOOR LIGHTING POWER ALLOWANCE
CEC-NRCC-LTI-03-E (Revised 02/15) — CALIFORNIA ENERGY COMMISSION

CERTIFICATE OF COMPLIANCE	NRCC-LTI-03-E
Certificate of Compliance - Indoor Lighting Power Allowance	(Page 4 of 4)
Project Name: BHRS NORTH COUNTY YOUTH TEAM OFFICE REMODEL	Date Prepared: 6/16/2017

DOCUMENTATION AUTHOR'S DECLARATION STATEMENT

1. I certify that this Certificate of Compliance documentation is accurate and complete.

Documentation Author Name:	DOAN TRANG HOANG	Documentation Author Signature:	Doan Trang Hoang
Company:	Alliance Engineering Consultants, Inc	Signature Date:	6/16/2017
Address:	4701 PATRICK HENRY DRIVE, BLDG 10	CEA Certification Identification (if applicable):	
City/State/Zip:	SANTA CLARA, CA 95054	Phone:	408-970-9888

RESPONSIBLE PERSON'S DECLARATION STATEMENT

I certify the following under penalty of perjury, under the laws of the State of California:
1. The information provided on this Certificate of Compliance is true and correct.
2. I am eligible under Division 3 of the Business and Professions Code to accept responsibility for the building design or system design identified on this Certificate of Compliance (responsible designer).
3. The energy features and performance specifications, materials, components, and manufactured devices for the building design or system design identified on this Certificate of Compliance conform to the requirements of Title 24, Part 1 and Part 6 of the California Code of Regulations.
4. The building design features or system design features identified on this Certificate of Compliance are consistent with the information provided on other applicable compliance documents, worksheets, calculations, plans and specifications submitted to the enforcement agency for approval with this building permit application.
5. I will ensure that a completed signed copy of this Certificate of Compliance shall be made available with the building permit(s) issued for the building, and made available to the enforcement agency for all applicable inspections. I understand that a completed signed copy of this Certificate of Compliance is required to be included with the documentation the builder provides to the building owner at occupancy.

Responsible Designer Name:	KENNETH S. NGAI	Responsible Designer Signature:	KS Ngai
Company:	ALLIANCE ENGINEERING CONSULTANTS, INC.	Date Signed:	6/16/2017
Address:	4701 PATRICK HENRY DRIVE, BLDG 10	License:	E11537
City/State/Zip:	SANTA CLARA, CA 95054	Phone:	408-970-9888

CERTIFICATE OF COMPLIANCE TITLE 24

KRJ Design Group
650.525.3700
11 Twenty-fourth Ave.
San Mateo, CA 94403

Alliance Engineering Consultants, Inc.
4701 Patrick Henry Drive, Bldg. 10
Santa Clara, CA 95054
phone (408) 970-9888
fax (408) 970-9218
www.aec-engineers.com
PROJECT NO. 110-17-01

REGISTERED PROFESSIONAL ENGINEER — KENNETH S. NGAI — No. 11537 — Exp. 6/30/17 — ELECT. — STATE OF CALIFORNIA

BHRS NORTH COUNTY YOUTH TEAM
OFFICE REMODEL
350 90TH STREET
DALY CITY, CA
94080

PROPOSED PLAN REVIEWED & APPROVED

DATE

SCALE: AS NOTED	DRWN BY: TH
DATE: 6/16/17	SQ. FT.: –
FLOOR: SECOND	PROJ. NO.: KRJ350-90TH

REVISIONS

NO.	DATE/DESCRIPTION	BY
	–	
	–	

THIS CAD DOCUMENT IS PROPERTY OF KRJ DESIGN GROUP, LOCATED AT 11 TWENTY-FOURTH AVE., SAN MATEO, CA. THIS IS FOR KRJ INTERNAL USE ONLY. REMOVAL AND/OR DELETION OF THIS NOTICE IS PROHIBITED AND UNLAWFUL. KRJ REPRESENTS THIS DOCUMENT TO BE FOR INTERNAL USE ONLY UNLESS OTHERWISE SPECIFIED. THE INFORMATION HERE WAS GATHERED BY KRJ STAFF OR REPRESENTED TO BE CORRECT BY OWNER AND/OR AGENT. THE USE OF THIS DOCUMENT IS LIMITED TO INTERNAL USE ONLY AS A REPRESENTATION DOCUMENT. THIS DOCUMENT MAY NOT BE MODIFIED IN ANY WAY WITHOUT WRITTEN AUTHORIZATION FROM KRJ DESIGN GROUP OR ITS SUBSIDIARIES.

WE CANNOT ACCEPT RESPONSIBILITY FOR DIMENSIONS TAKEN FROM BLUEPRINTS SUPPLIED BY CLIENT/ARCHITECT.

ON SITE DIMENSIONS HAVE NOT BEEN TAKEN. VERIFICATION REQUIRED PRIOR TO BUILDOUT OR ORDER BY:

SHEET NO.
E0.3
3 OF 8 SHEETS

SHEET NOTES:

1. ALL ELECTRICAL ITEMS SHOWN ON THIS DRAWING ARE (E) TO REMAIN, U.O.N.
2. RELOCATE (E) LIGHT FIXTURE TO THE (N) LOCATION AS SHOWN. EXTEND (N) CONDUIT AND WIRES AS REQUIRED TO PUT IT BACK IN SERVICE.
3. DISCONNECT AND REMOVE (E) OVERRIDE SWITCH AND ASSOCIATED WIRES AND CONDUIT UP TO (E) JUNCTION BOX WHICH IS TO REMAIN, FIELD VERIFY. COIL AND TAPE WIRES IN JUNCTION BOX FOR RECONNECTION IN THE (N) WORK, SEE NOTE 6 ON THIS SHEET FOR ADDITIONAL WORK REQUIRED.
4. RELOCATE (E) SWITCHES (TOTAL OF 2) TO THE (N) LOCATION SHOWN, SEE NOTE 7 ON THIS SHEET FOR ADDITIONAL WORK REQUIRED.
5. ELECTRICAL CONTRACTOR SHALL FIELD VERIFY (E) SWITCHING CONFIGURATION MAKING SURE THAT THE RIGHT LIGHT SWITCH THAT CONTROLS OPEN OFFICE #215 WILL BE THE ONE RELOCATED.
6. PROVIDE (N) 3-WAY SWITCH TO FUNCTION AS AN OVERRIDE SWITCH, REFER TO DRAWING 4/E3.1 FOR WIRING CONNECTION AND ADDITIONAL WORK REQUIRED.
7. (E) RELOCATED DUAL LEVEL SWITCH, EXTEND (N) CONDUIT AND WIRES TO CONTROL (E) LIGHT FIXTURES IN OPEN OFFICE #215.
8. CONNECT TO CONTROLLED RECEPTACLE, SEE DWG. E2.1
9. LIGHT FIXTURES BALLAST IN THIS ROOM SHALL BE REPLACED WITH ADVANCE MARK 7, 0-10V DIMMABLE ELECTRONIC BALLAST. SEE DWG. 1/E3.1 FOR LIGHT FIXTURE WIRING CONNECTION.
10. DISCONNECT (E) LIGHT FIXTURES SHOWN IN (N) ROOMS #203, 209 AND 205 THAT ARE CONNECTED TO (E) LIGHT FIXTURES WIRING IN THIS ROOM. (E) HOT AND NEUTRAL WIRES SHALL BE EXTENDED TO THE (N) ROOMS LIGHT FIXTURES, SEE NOTE 9 ON THIS SHEET FOR ADDITIONAL WORK REQUIRED.
11. ALL (E) LIGHT FIXTURES IN THE COORIDOR AREA SHALL BE REWIRED AS REQUIRED AND RESWITCHED AS SHOWN.
12. ALL (E) LIGHT FIXTURES IN THE WAITING AREA SHALL BE REWIRED AS REQUIRED AND RESWITCHED AS SHOWN.
13. (E) RELOCATED DUAL LEVEL SWITCH, EXTEND (N) CONDUIT AND WIRES TO CONTROL (E) LIGHT FIXTURES IN OPEN OFFICE #206.

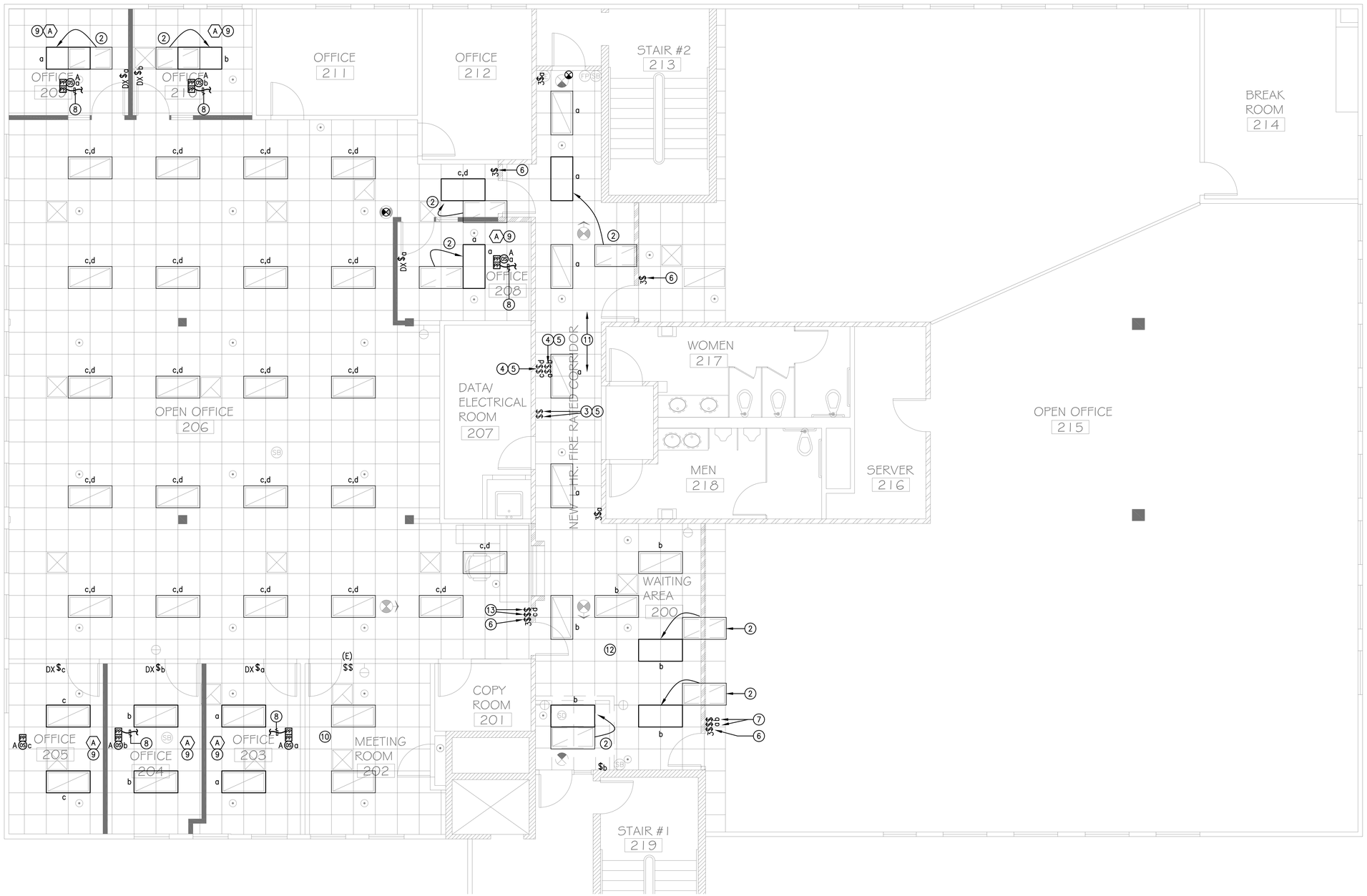

1 / E1.1 LIGHTING PLAN ①

SCALE: 1/4" = 1'-0"

LIGHTING PLAN

KRJ Design Group

650.525.3700
11 Twenty-fourth Ave.
San Mateo, CA 94403

Alliance Engineering Consultants, Inc.
4701 Patrick Henry Drive, Bldg. 10
Santa Clara, CA 95054
phone (408) 970-0888
fax (408) 970-0218
www.aec-engineers.com

PROJECT NO. 110-17-01

REGISTERED PROFESSIONAL ENGINEER
KENNETH S. DUGAN
No. 11537
Exp. 6/30/19
ELECT.
STATE OF CALIFORNIA

BHRS NORTH COUNTY YOUTH TEAM
OFFICE REMODEL
350 90TH STREET
DALY CITY, CA
94080

PROPOSED PLAN REVIEWED & APPROVED

DATE

SCALE: AS NOTED	DRWN BY: TH
DATE: 6/16/17	SQ. FT.: –
FLOOR: SECOND	PROJ. NO.: KRJ350-90TH

REVISIONS

NO.	DATE/DESCRIPTION	BY

THIS CAD DOCUMENT IS PROPERTY OF KRJ DESIGN GROUP, LOCATED AT 11 TWENTY-FOURTH AVE., SAN MATEO, CA. THIS IS FOR KRJ INTERNAL USE ONLY. REMOVAL AND/OR USE OF THIS NOTICE IS PROHIBITED AND UNLAWFUL. KRJ REPRESENTS THIS DOCUMENT FOR INTERNAL USE ONLY UNLESS OTHERWISE SPECIFIED. THE INFORMATION HERE WAS GATHERED BY KRJ STAFF OR REPRESENTED TO BE CORRECT BY OWNER AND/OR AGENT. THE USE OF THIS DOCUMENT IS INTENDED FOR INTERNAL USE ONLY AS A REFERENCE DOCUMENT. THIS DOCUMENT IS NOT TO BE MODIFIED IN ANY WAY WITHOUT WRITTEN AUTHORIZATION FROM KRJ DESIGN GROUP OR ITS SUBSIDIARIES.

WE CANNOT ACCEPT RESPONSIBILITY FOR DIMENSIONS TAKEN FROM BLUEPRINTS SUPPLIED BY CLIENT/ARCHITECT.

ON SITE DIMENSIONS HAVE NOT BEEN TAKEN. VERIFICATION REQUIRED PRIOR TO BUILDOUT OR ORDER BY:

SHEET NO.

E1.1 — 4 OF 8 SHEETS

SHEET NOTES:

1. (E) ELECTRICAL ITEMS TO REMAIN, MAINTAIN CIRCUIT CONTINUITY.
2. MAKE FINAL CONNECTION TO OFFICE PARTITION.
3. RECEPTACLE SHALL BE SPLIT WIRED WITH ONE CONTROLLED AND ONE UNCONTROLLED RECEPTACLE PROVIDE A PERMANENT MARKING TO DIFFERENTIATE CONTROLLED RECEPTACLE FROM UNCONTROLLED RECEPTACLE.
4. CIRCUIT SERVING CONTROLLED RECEPTACLE SHALL BE CONNECTED TO OCCUPANCY SENSOR FOR AUTOMATIC SHUTDOWN.
5. RECEPTACLE CONNECTED TO CIRCUIT #7 SHALL BE MARKED "CONTROLLED RECEPTACLE".
6. RECEPTACLE CONNECTED TO CIRCUITL #11 SHALL BE MARKED "CONTROLLED RECEPTACLE".

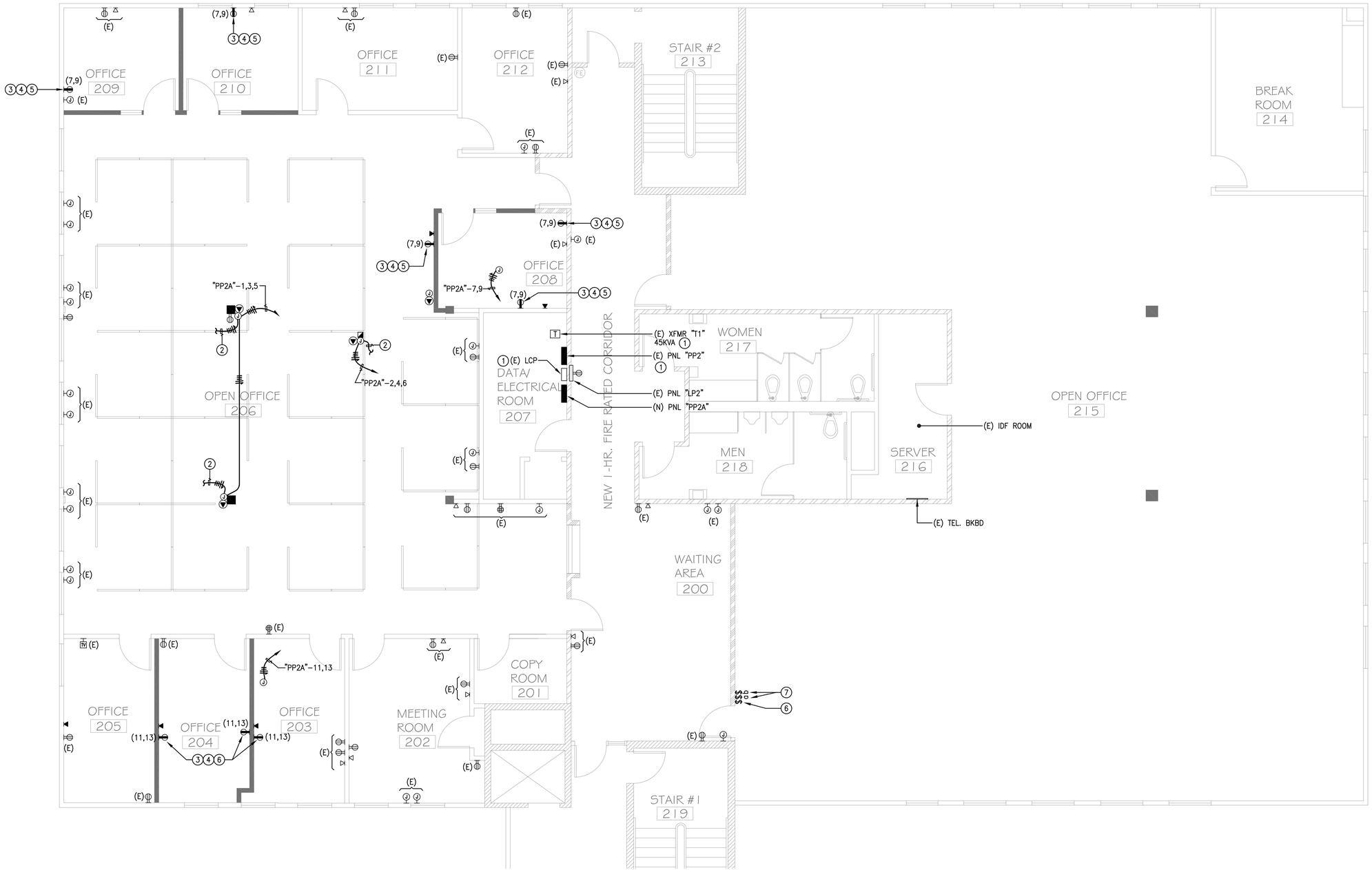

1 E2.1 POWER PLAN ①

SCALE: 1/4" = 1'-0"

POWER PLAN

KRJ Design Group

650.525.3700
11 Twenty-fourth Ave.
San Mateo, CA 94403

Alliance Engineering Consultants, Inc.
4701 Patrick Henry Drive, Bldg. 10
Santa Clara, CA 95054
phone (408) 970-0888
fax (408) 970-0218
www.aec-engineers.com

PROJECT NO. 110-17-01

REGISTERED PROFESSIONAL ENGINEER
KENNETH S. JAGAI
No. 11537
Exp. 6/30/17
ELECT.
STATE OF CALIFORNIA

BHRS NORTH COUNTY YOUTH TEAM
OFFICE REMODEL
350 90TH STREET
DALY CITY, CA
94080

PROPOSED PLAN REVIEWED & APPROVED

DATE

SCALE: AS NOTED	DRWN BY: TH
DATE: 6/16/17	SQ. FT.: –
FLOOR: SECOND	PROJ. NO.: KRJ350-90TH

REVISIONS

NO.	DATE/DESCRIPTION	BY

THIS CAD DOCUMENT IS PROPERTY OF KRJ DESIGN GROUP, LOCATED AT 11 TWENTY-FOURTH AVE. SAN MATEO, CA. THIS IS FOR KRJ INTERNAL USE ONLY. REMOVAL AND/OR DELETION OF THIS NOTICE IS PROHIBITED AND UNLAWFUL. KRJ REPRESENTS THIS DOCUMENT TO BE FOR INTERNAL USE ONLY UNLESS OTHERWISE SPECIFIED. THE INFORMATION HERE WAS GATHERED BY KRJ STAFF OR REPRESENTED TO BE CORRECT BY OWNER AND/OR AGENT. THE USE OF THIS DOCUMENT IS INTENDED FOR INTERNAL USE ONLY AS A REFERENCE DOCUMENT. THIS DOCUMENT IS NOT TO BE MODIFIED IN ANY WAY WITHOUT WRITTEN AUTHORIZATION FROM KRJ DESIGN GROUP OR ITS SUBSIDIARIES.

WE CANNOT ACCEPT RESPONSIBILITY FOR DIMENSIONS TAKEN FROM BLUEPRINTS SUPPLIED BY CLIENT/ARCHITECT.

ON SITE DIMENSIONS HAVE NOT BEEN TAKEN. VERIFICATION REQUIRED PRIOR TO BUILDOUT OR ORDER BY:

SHEET NO.
E2.1

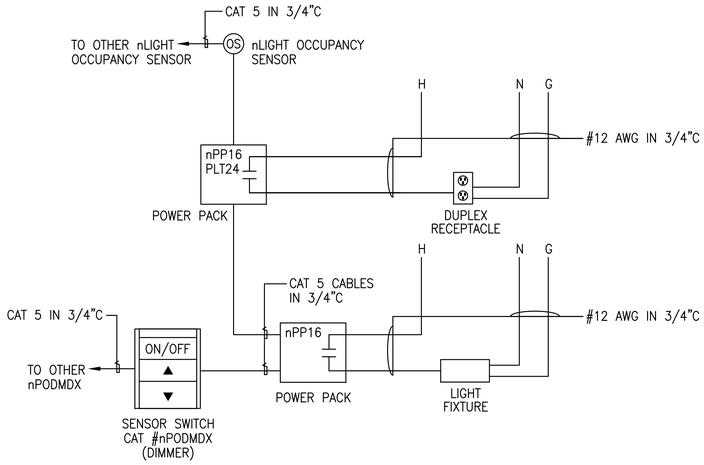

2 / E3.1 LIGHTING FIXTURE WIRING DIAGRAM (0–10V DIMMING) WITH CONTROL RECEPTACLE

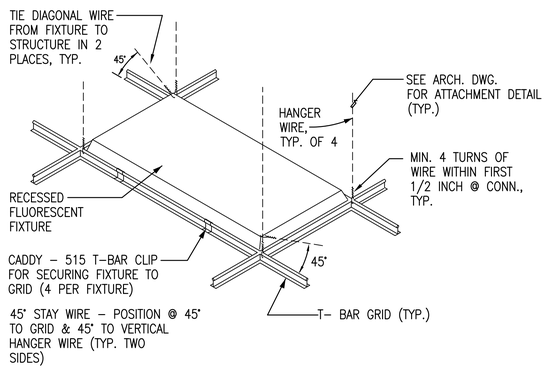

3 / E3.1 TYPICAL SUPPORT REQUIREMENTS FOR RECESSED LIGHT FIXTURES

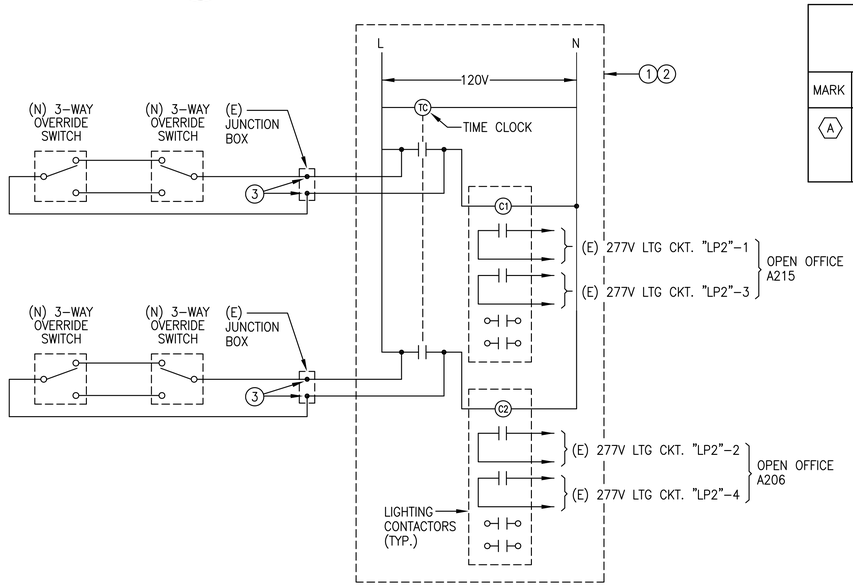

4 / E3.1 OVERRIDE SWITCH WIRING DIAGRAM

(E) PANEL # PP2	LOCATION						FEEDER SIZE EXISTING				
VOLTS 120/208V,3PH,4W	MLO [ ]	FEED THRU LUGS [ ]					FLUSH [ ]	SURFACE X			
AMPS 225	MCB [X]	MCB AMPS 225					NEMA 1 [X]	NEMA 3R [ ]			
AIC RATING 10K	BUS AMPS 225										
	LOAD (VA)			BKR/	CKT		BKR/	LOAD (VA)			
DESCRIPTION	A	B	C	POLE	No.		POLE	A	B	C	DESCRIPTION
(E) LOAD				20/1	1	2	20/1				(E) LOAD
					3	4					
					5	6					
					7	8					
SPARE					9	10					
(E) LOAD					11	12					
					13	14					
					15	16					
					17	18					
					19	20					
					21	22	50/2				
					23	24					
					25	26	20/1				
					27	28					
					29	30					
					31	32					SPARE
					33	34					
					35	36					
					37	38		2220			
				30/2	39	40	60/3		2220		(N) PNL "PP2A"
					41	42				2220	
SUBTOTAL								2220	2220	2220	SUBTOTAL

TOTAL LOAD 6.66 KVA; @ 208 VOLTS = 18.5 AMPS

4

(N) PANEL # PP2A	LOCATION						FEEDER SIZE SEE SINGLE LINE DIAGRAM				
VOLTS 120/208V,3PH,4W	MLO [X]	FEED THRU LUGS [ ]					FLUSH [X]	SURFACE X			
AMPS 100	MCB [ ]	MCB AMPS					NEMA 1 [ ]	NEMA 3R [ ]			
AIC RATING 10K	BUS AMPS 100										
	LOAD (VA)			BKR/	CKT		BKR/	LOAD (VA)			
DESCRIPTION	A	B	C	POLE	No.		POLE	A	B	C	DESCRIPTION
RECEPT OPEN OFFICE	720			20/1	1	2	20/1	540			RECEPT. OPEN OFFICE
		720			3	4			540		
			720		5	6				540	
RECEPT RM. 208,209,210	900				7	8					SPARE
		900			9	10					
RECEPT RM. 203,204			540		11	12					
	540				13	14					
SPARE					15	16					
					17	18					
SPACE				-	19	20	-				SPACE
				-	21	22	-				
				-	23	24	-				
SUBTOTAL	2160	1620	1260					540	540	540	SUBTOTAL

TOTAL LOAD 6.66 KVA; @ 208 VOLTS = 18.5 AMPS

LIGHTING FIXTURE SCHEDULE

MARK	MANUFACTURERS MODEL NO.	LAMPS QTY.	LAMPS TYPE	TOTAL WATTS	VOLTS	MOUNTING	DESCRIPTION AND REMARKS
A	EXISTING	3	F32T8 3500K	79	277	RECESSED	EXISTING 2'x4' FLUORESCENT LIGHT FIXTURE WITH PRISMATIC ACRYLIC LENS. PROVIDE NEW MARK 7, 0–10V DIMMABLE ELECTRONIC BALLAST.

SHEET NOTES:

1. ALL ELECTRICAL ITEMS SHOWN IN THIS AREA ARE (E) U.O.N.
2. (E) LIGHTING CONTROL PANEL "LCP" LOCATED IN ELECTRICAL ROOM #207.
3. SPLICE (N) WIRE TO (E) WIRE.
4. PROVIDE (N) CIRCUIT BREAKER IN (E) SPACES, SIZE AS SHOWN. (N) CIRCUIT BREAKER TYPE AND INTERRUPTING RATING SHALL MATCH (E).

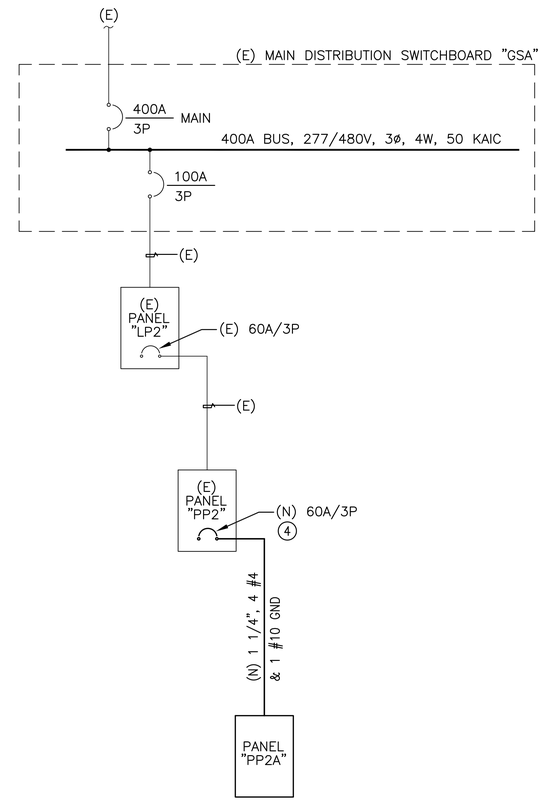

1 / E3.1 SINGLE LINE DIAGARM

KRJ Design Group
650.525.3700
11 Twenty-fourth Ave.
San Mateo, CA 94403

Alliance Engineering Consultants, Inc.
4701 Patrick Henry Drive, Bldg. 10
Santa Clara, CA 95054
phone (408) 970-0888
fax (408) 970-0218
www.aec-engineers.com

PROJECT NO. 110-17-01

PROFESSIONAL ENGINEER REGISTERED KENNETH S. JAGAN No. 11537 Exp. 6/30/19 ELECT. STATE OF CALIFORNIA

BHRS NORTH COUNTY YOUTH TEAM
OFFICE REMODEL
350 90TH STREET
DALY CITY, CA
94080

PROPOSED PLAN REVIEWED & APPROVED

DATE

SCALE AS NOTED	DRWN BY TH
DATE 6/16/17	SQ. FT. –
FLOOR SECOND	PROJ. NO. KRJ350–90TH

REVISIONS

NO.	DATE/DESCRIPTION	BY
	–	
	–	

THIS CAD DOCUMENT IS PROPERTY OF KRJ DESIGN GROUP, LOCATED AT 11 TWENTY–FOURTH AVE., SAN MATEO, CA. THIS IS FOR KRJ INTERNAL USE ONLY. REMOVAL AND/OR DELETION OF THIS NOTICE IS PROHIBITED AND UNLAWFUL. KRJ REPRESENTS THIS DOCUMENT TO BE FOR INTERNAL USE ONLY UNLESS OTHERWISE SPECIFIED. THE INFORMATION HERE WAS GATHERED BY KRJ STAFF OR REPRESENTED TO BE CORRECT BY OWNER AND/OR AGENT. THE USE OF THIS DOCUMENT IS LIMITED FOR INTERNAL USE ONLY AS A DOCUMENT. DOCUMENT MAY NOT BE REPRODUCED, ALTERED OR MODIFIED IN ANY WAY WITHOUT WRITTEN AUTHORIZATION FROM KRJ DESIGN GROUP OR ITS SUBSIDIARIES.

WE CANNOT ACCEPT RESPONSIBILITY FOR DIMENSIONS TAKEN FROM BLUEPRINTS SUPPLIED BY CLIENT/ARCHITECT.

ON SITE DIMENSIONS HAVE NOT BEEN TAKEN. VERIFICATION REQUIRED PRIOR TO BUILDOUT OR ORDER BY:

SHEET NO. E3.1 6 OF 6 SHEETS

EXHIBIT A-4

LANDLORD IMPROVEMENTS

Landlord shall promptly reimburse County for all restroom ADA related Leasehold Improvements in the form of rental abatement after tenant submits evidence and completion of tenant improvements. Those improvements are highlighted below.

GORDIAN
Building knowledge

BHRS North County Youth Team, Office Remodel

This is an Opinion of Probable Cost

Item #	Description	Quantity	Units	Unit Cost	Extended	Estimate Notes
18	Closer, gasket, lever hardware, electrical connect, card reader	4	Sets	1,500.00	$6,000	
19	Verify all existing 20 minute rated doors	4	Sets	120.00	$480	Check all fire doors for code compliance
20	Modify select fire rated doors to comply with code	1	LS	500.00	$500	Assume some work is required; gaskets, caulk
21	Modify bottom of existing doors to meet clearance	1	LS	600.00	$600	Assume that some doors will need to be trimmed at bottom
22	Tactile egress sign at suite entry/ exit	1	LS	300.00	$300	Entry and exit
	Transaction Window					
23	5' x 4' dbl sliding window assembly w/ tempered glass	1	Window	850.00	$850	
24	2' 10" high counter at transaction, 20 min FR Plam	1	LS	1,585.00	$1,585	10 Carpenter hours and $350 in materials
25	Fire rated roll up door at window; 5' x 4'	1	Each	4,200.00	$4,200	Fire rated
	Restroom ADA Improvements					
26	Remove stall door and panel	2	Lhours	100.00	$200	
27	Provide 36" wide door and panel. reconfigure swing	1	Stall	1,500.00	$1,500	New door and reconfigured panel
28	Remove grab bars	4	Each	75.00	$300	
29	New grab bars, L shaped	2	Each	280.00	$560	
30	Adjust location of TP holder	2	Each	75.00	$150	
31	Modify urinal screen for clearance	1	Modify	240.00	$240	Carpenter for two hours
32	Relocate paper towel dispenser	2	Each	75.00	$150	
33	Remove/ reinstall mirror	2	Each	75.00	$150	
	Existing Wall Improvements and Paint Walls					
34	Added seismic bracing/ compression struts at existing	20	Each	100.00	$2,000	Assumed 20 locations (undefined)
35	Patch select walls	1	LS	1,100.00	$1,100	1 skilled workersx 1 day PLUS $150 in patch materials
36	Check existing 1 hour rated walls/ fire caulk as req'd	1	LS	1,200.00	$1,200	1 skilled worker x 1 day PLUS $250 in materials
37	Prime and paint 2 coats at suite 200 and fire corridor	5,800	SF	1.60	$9,280	645 LF of wall at 8' 11" high walls
38	Add for select wall accent	1,160	SF	0.50	$580	20% accent
39	Repair select damaged walls at restrooms	1	LS	650.00	$650	4 skilled worker hours and $150 in material
40	Paint at restrooms (assume only touch up required)	1	LS	350.00	$350	
	Other Improvements					
41	Additional firestopping at fire wall penetrations	1	LS	390.00	$390	2 Skilled worker hours Plus $150 materials

GORDIAN
Building knowledge

BHRS North County Youth Team, Office Remodel

This is an Opinion of Probable Cost

Item #	Description	Quantity	Units	Unit Cost	Extended	Estimate Notes
7.0	**Plumbing**					
	Demolition					Subcontractor plumber = $120 per hour billing rate.
1	Remove floor mounted water closet	2	Each	180.00	$360	3 skilled worker hours
2	Remove wall mounted urinal	1	Each	150.00	$150	
3	Remove countertop lavatory	1	Each	130.00	$130	
4	Remove drinking fountain	1	Each	150.00	$150	
	New Plumbing Work					
5	Reinstall water closets 17"-18" from adjacent wall	2	Each	650.00	$1,300	Use existing rough in waste and vent
6	Install New ADA urinal	1	Each	1,800.00	$1,800	
7	Reinstall countertop lavatory 18" from urinal partition	1	Each	350.00	$350	
8	Reinstall drinking fountain in new location	1	Each	550.00	$550	
9	New lead free, ball type shut off valve in CW piping at DF	1	LS	850.00	$850	
10	Core drill at floor for new piping at DF	1	LS	1,800.00	$1,800	Minimum fee for core drill
11	New cw, waste and vent at relocated DF	1	LS	1,000.00	$1,000	
12	Connect to existing	1	LS	360.00	$360	
13	Cut and patch as required	1	LS	750.00	$750	Allow for labor and material
	Fire Sprinkler					
14	Adjust head locations as necessary to comply with code	1	Allowance	2,500.00	$2,500	Undefined scope
	Bare Cost SUBTOTAL				$12,050	
8.0	**Electrical**					
	Lighting					Subcontractor electrician = $120 per hour billing rate
1	Remove select ceiling tile for access	550	SF	1.15	$633	
2	Relocate light fixtures in grid	12	Each	240.00	$2,880	2 labor hours at each location
3	Replace light fixture ballast	6	Fixtures	125.00	$750	
	Switches Sensors, conduit, wire					
4	Occupancy sensor	6	Each	360.00	$2,160	

GORDIAN
Building knowledge

BHRS North County Youth Team, Office Remodel

This is an Opinion of Probable Cost

Item #	Description	Quantity	Units	Unit Cost	Extended	Estimate Notes
42	Fire extinguishers (1 relocate and 1 new)	1	LS	450.00	$450	
	Bare Cost SUBTOTAL				$54,110	
4.0	**Floors**					
	Prepare for New Flooring					
1	Floor leveling issues	3,400	SF	1.00	$3,400	Allow for floating, patching, grinding
	Carpet & Rubber Base					
2	Carpet (Shaw Mirror Image Tile 59466 shadow 63761)	3,400	SF	5.00	$17,000	
3	Rubber base throughout	850	LF	3.50	$2,975	
	Repair at Restroom Floor					
4	Repair select tiles at restrooms	1	LS	750.00	$750	Patching required after fixtures are moved
	Bare Cost SUBTOTAL				$24,125	
5.0	**Ceilings**					
	Remove/ Repair Select Ceiling tiles					
1	Remove select damaged tiles	420	SF	1.10	$462	10% of area is assumed
2	Repair/ replace damaged t-bar spine	1	LS	1,200.00	$1,200	At select locations
3	ADD seismic bracing and compression struts per code	20	Each	150.00	$3,000	Assumed 20 locations
	Ceiling Tiles					
4	New ceiling tiles at West corner in waiting room	80	SF	5.50	$440	Includes grid
5	Replace select ceiling tiles	420	SF	3.50	$1,470	
	Restroom Ceiling					
6	Repair as necesssary after improvements to restroom	1	LS	500.00	$500	
	Bare Cost SUBTOTAL				$7,072	

EXHIBIT B

[Date]

Mr. Michael Callagy
Assistant County Manager
County of San Mateo
400 County Center
Redwood City, CA 94063

RE: Acknowledgement of Rent Commencement Date, Lease Between CITY OF DALY CITY (Landlord), and the COUNTY OF SAN MATEO (Tenant), for the premises known as 350 90th Street, Suite 200, Daly City, CA.

Dear Mr. Callagy:

This letter will confirm that for all purposes of the Lease, the Rent Commencement Date (as defined in Section 3.2 of the Lease) is _____, 2018.

Please acknowledge your acceptance of this letter by signing and returning a copy of this letter.

Very truly yours,

_____
By_____
Title _____

Accepted and Agreed:

By _____
Assistant County Manager

EXHIBIT C

RULES & REGULATIONS

GENERAL RULES

1. Lessee shall not suffer or permit the obstruction of any Common Areas, including driveways, walkways and stairways.
2. Lessor reserves the right to refuse access to any persons Lessor in good faith judges to be a threat to the safety and reputation of the Project and its occupants.
3. Lessee shall not make or permit any noise or odors that annoy or interfere with other lessees or persons having business within the Project.
4. Lessee shall not keep animals or birds within the Project, and shall not bring, motorcycles or other vehicles into areas not designated as authorized for same.
5. Lessee shall not make, suffer or permit litter except in appropriate receptacles for that purpose.
6. Lessee shall not alter any lock or install new or additional locks or bolts.
7. Lessee shall be responsible for the inappropriate use of any toilet rooms, plumbing or other utilities. No foreign substances of any kind are to be inserted therein.
8. Lessee shall not deface the walls, partitions or other surfaces of the Premises or Project.
9. Lessee shall not suffer or permit anything in or around the Premises or Building that causes excessive vibration or floor loading in any part of the Project.
10. Furniture, significant freight and equipment shall be moved into or out of the building only with the Lessor's knowledge and consent, and subject to such reasonable limitations, techniques and timing, as may be designated by Lessor. Lessee shall be responsible for any damage to the Office Building Project arising from any such activity.
11. Lessee shall not employ any service or contractor for services or work to be performed in the Building, except as approved by Lessor.
12. Lessor reserves the right to close and lock the Building on Saturdays, Sundays and Building Holidays, and on other days between the hours of 6 P.M. and 7 A.M. of the following day. If Lessee uses the Premises during such periods, Lessee shall be responsible for securely locking any doors it may have opened for entry.
13. Lessee shall return all keys at the termination of its tenancy and shall be responsible for the cost of replacing any keys that are lost.

15. No Lessee, employee or invitee shall go upon the roof of the Building without Lessor’s permission.
16. Lessee shall not suffer or permit smoking or carrying of lighted cigars or cigarettes in areas reasonably designated by Lessor or by applicable governmental agencies as non-smoking areas.
17. Lessee shall not use any method of heating or air conditioning other than as provided by Lessor.
18. Lessee shall not install, maintain or operate any vending machines upon the Premises without Lessor's written consent.
19. The Premises shall not be used for lodging or manufacturing, commercial cooking or food preparation.
20. Lessee shall comply with all safety, fire protection and evacuation regulations established by Lessor or any applicable governmental agency.
21. Lessor reserves the right to waive any one of these rules or regulations, and/or as to any particular Lessee, and any such waiver shall not constitute a waiver of any other rule or regulation or any subsequent application thereof to such Lessee.
22. Lessee assumes all risks from theft or vandalism and agrees to keep its Premises locked as may be required.
23. Lessor reserves the right to make such other reasonable rules and regulations as it may from time to time deem necessary for the appropriate operation and safety of the Project and its occupants. Lessee agrees to abide by these and such rules and regulations.

PARKING RULES

1. Parking areas shall be used only for parking by vehicles no longer than full size, passenger automobiles herein called "Permitted Size Vehicles." Vehicles other than Permitted Size Vehicles are herein referred to as "Oversized Vehicles."
2. Lessee shall not permit or allow any vehicles that belong to or are controlled by Lessee or Lessee's employees, suppliers, shippers, customers, or invitees to be loaded, unloaded, or parked in areas other than those designated by Lessor for such activities.
3. Parking stickers or identification devices shall be the property of Lessor and be returned to Lessor by the holder thereof upon termination of the holder's parking privileges. Lessee will pay such replacement charge as is reasonably established by Lessor for the loss of such devices.
4. Lessor reserves the right to refuse the sale of monthly identification devices to any person or entity that willfully refuses to comply with the applicable rules, regulations, laws and/or agreements.
5. Lessor reserves the right to relocate all or a part of parking spaces from floor to floor, within one floor, and/or to reasonably adjacent offsite location(s), and to reasonably allocate them between compact and standard size spaces, as long as the same complies with applicable laws, ordinances and regulations.
6. Users of the parking area will obey all posted signs and park only in the areas designated for vehicle parking.
7. Unless otherwise instructed, every person using the parking area is required to park and lock his own vehicle. Lessor will not be responsible for any damage to vehicles, injury to persons or loss of property, all of which risks are assumed by the party using the parking area.

8. Validation, if established, will be permissible only by such method or methods as Lessor and/or its licensee may establish at rates generally applicable to visitor parking.
9. The maintenance, washing, waxing or cleaning of vehicles in the parking structure or Common Areas is prohibited.
10. Lessee shall be responsible for seeing that all of its employees, agents and invitees comply with the applicable parking rules, regulations, laws and agreements.
11. Lessor reserves the right to modify these rules and/or adopt such other reasonable and non-discriminatory rules and regulations as it may deem necessary for the proper operation of the parking area.
12. Such parking use as is herein provided is intended merely as a license only and no bailment is intended or shall be created hereby.