SAN MATEO COUNTY MEMORIAL PARK
9500 PESCADERO CREEK RD, LOMA MAR, CA
WASTEWATER COLLECTION SYSTEM IMPROVEMENTS
100% ENGINEERING DESIGN PLANS

SITE MAP

VICINITY MAP

PROJECT CONTACTS

CIVIL ENGINEER

SHERWOOD DESIGN ENGINEERS
1525 SEABRIGHT AVENUE
SANTA CRUZ, CA 95062
PHONE: 831-426-9054
CONTACT: PETER HAASE, P.E.
PRINCIPAL ENGINEER

STRUCTURAL ENGINEER

STREETER GROUP, INC.
2571 MAIN STREET, SUITE C
SOQUEL, CA 95073
PHONE: 831-477-1781
CONTACT: BRAD STREETER
PRINCIPAL ENGINEER

CONSTRUCTION MANAGER

CAPITAL PROGRAM MANAGEMENT, INC. (CPM)
1851 HERITAGE LANE, #210
SACRAMENTO, CA 95815
PHONE: 916-812-9654
CONTACT: MIKE WASSERMAN

GEOTECHNICAL ENGINEER

CONSTRUCTION TESTING SERVICES (CTS)
ONE EMBARCADERO CENTER, SUITE 535
SAN FRANCISCO, CA 94111
PHONE: 415-334-4747
CONTACT: ANDREW POELVOORDE

HAZARDOUS MATERIAL CONSULTANT

VISA ENVIRONMENTAL
2984 TEAGARDEN STREET
SAN LEANDRO, CA94577
PHONE: 510-346-8860
CONTACT: CHRIS BURNS

SHEET INDEX

#	ID	SHEET TITLE
1	WW0.0	COVER SHEET
2	WW1.0	SITE IMPROVEMENT PLAN
3	WW2.0	SITE IMPROVEMENT PLAN - TAN OAK FLAT AND REDWOOD FLAT
4	WW2.1	SITE IMPROVEMENT PLAN - SEQUOIA FLAT
5	WW2.2	WWTP IMPROVEMENT PLAN
6	WW2.3	BRIDGE IMPROVEMENT PLAN
7	WW3.0	DETAILS
8	WW3.1	DETAILS - CONTINUED
9	WW4.0	SPECIFICATIONS - GENERAL AND MATERIAL
10	WW4.1	SPECIFICATIONS - CONSTRUCTION
11	WW5.0	INFORMATIONAL SHEET - TAN OAKS 1
12	WW5.1	INFORMATIONAL SHEET - SEQUOIA FLAT RESTROOM C2
13	WW5.2	INFORMATIONAL SHEET - SEQUOIA FLAT RESTROOM D
14	WW5.3	INFORMATIONAL SHEET - SEQUOIA FLAT RESTROOM B2
15	WW5.4	INFORMATIONAL SHEET - SEQUOIA FLAT RESTROOM B1
16	WW5.5	INFORMATIONAL SHEET - SEQUOIA FLAT RESTROOM B3
17	WW5.6	INFORMATIONAL SHEET - WWTP R.E.Y.
18	S1	BRIDGE ELEVATION, STRUCTURAL NOTES
19	S2	STRUCTURAL DETAILS
20	S3	DETAILS

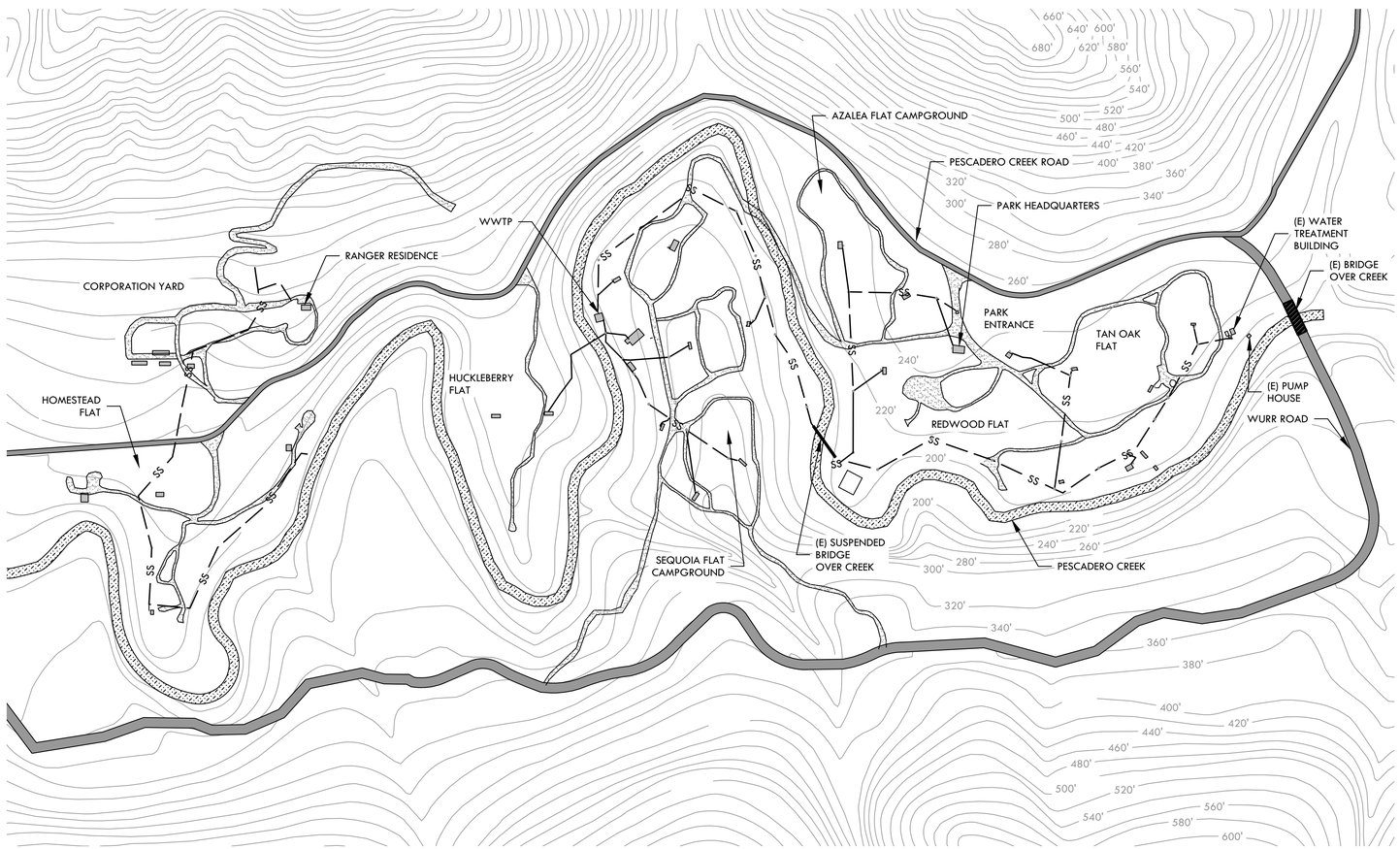

1 EXISTING SITE PLAN
SCALE: 1'=300' @ 22"X34"

LEGEND

- 220' — CONTOUR LINE
- SS — (E) SANITARY SEWER LINE
- (E) CREEK
- (E) COUNTY ROAD
- (E) MEMORIAL PARK ROAD
- (E) BUILDING

GENERAL NOTES

PROJECT DESCRIPTION

THE EXISTING PARK WASTEWATER SYSTEM CONSISTS OF 9,560 LINEAL FEET (LF) OF GRAVITY SEWER PIPE AND 56 MANHOLES THAT CONVEY SEWAGE TO THE WASTEWATER TREATMENT PLANT (CURRENTLY BEING UPGRADED), ON THE WESTERN EDGE OF THE SEQUIOA FLAT CAMPGROUNDS. SOME SECTIONS OF THE COLLECTION SYSTEM HAVE BEEN UPGRADED RECENTLY WITH PVC OR HDPE. DUE TO THE COMBINATION OF AN AGING SYSTEM AND INADEQUATE FALL THROUGH SECTIONS OF THE COLLECTION SYSTEM, PARKS WOULD LIKE TO REPLACE THE SEQUOIA FLAT AND TAN OAK FLAT COLLECTION SYSTEMS WITH HDPE PIPE INSTALLED USING HORIZONTAL DIRECTIONAL DRILLING (HDD). TO CONNECT THE TWO SYSTEMS, THE LINE ON THE PIPE BRIDGE CROSSING PESCADERO CREEK WILL ALSO BE UPGRADED.

THE WASTEWATER IMPROVEMENTS WILL INCLUDE:

1. INSTALLING HDPE USING HDD TO REPLACE SELECT PORTIONS OF THE EXISTING COLLECTION SYSTEM WITH IMPROVED SLOPES THAT CAN SUSTAIN A MINIMUM OF 2 FEET PER SECOND, WHERE FEASIBLE, TO CONVEY SEWAGE TO THE WASTEWATER TREATMENT PLANT.
2. RAISING THE PIPE CROSSING ACROSS THE CREEK, INCLUDING MODIFICATIONS TO THE PIPE SUPPORTS WITHOUT ALTERING THE EXISTING SUPPORT CABLE ON THE SUSPENSION BRIDGE.

SURVEY NOTES:

1. MOST OF THE ROAD ALIGNMENTS AND LOCATIONS OF FEATURES ARE BASED ON AERIAL IMAGERY AND LiDAR DATA FROM SAN MATEO COUNTY AND ARE THEREFORE APPROXIMATE. THE SEWER SYSTEM RIM AND INVERT ELEVATIONS PROVIDED OVER THESE AREAS ARE ASSUMED TO BE SLIGHTLY HIGHER THAN WHAT IS SHOWN TO BE CONSERVATIVE. EXACT LOCATIONS AND ELEVATIONS TO BE VERIFIED BY THE CONTRACTOR.
2. DETAILED SURVEY DATA OF SELECT BUILDING AREAS WAS OBTAINED FROM R.E.Y ENGINEERS ON MARCH 9, 2020. COORDINATES ARE IN TERMS OF NAD83 (2011), AND ELEVATIONS ARE IN TERMS OF NAVD88. POINTS ARE BASED LOCALLY UPON TIES TO CALIFORNIA SPATIAL REFERENCE NETWORK STATIONS P219, P220 AND P277.
3. TO COMPARE ELEVATIONS FROM THE MEMORIAL PARK WASTEWATER TREATMENT FACILITIES IMPROVEMENT PROJECT BY HYDROSCIENCE, SUBTRACT 291.49' FROM ALL HYDROSCIENCE ELEVATION VALUES TO MATCH R.E.Y ELEVATION VALUES.
4. FOR MORE DETAILED SURVEY INFORMATION ON THE NEW RESTROOM PROJECT, SEE R.E.Y. ENGINEERS INC. PLANS DATED 10/16/2019.
5. ALL REFERENCED SURVEYS ARE ATTACHED AS INFORMATIONAL SHEETS. (WW5.0 - WW5.6)

SHEET TITLE:
COVER SHEET

CLIENT:
SAN MATEO COUNTY PARKS
ATTN: MARIO NASTARI
4555 COUNTY CENTER, 4TH FLOOR
REDWOOD CITY, CA 94063
TEL: (650) 363-4020

PROJECT TITLE:
WASTEWATER SYSTEM IMPROVEMENTS
MEMORIAL PARK, 9500 PESCADERO CREEK RD
LOMA MAR, CA 94021

SHERWOOD DESIGN ENGINEERS
1525 Seabright Ave
Santa Cruz, CA 95062
www.sherwoodengineers.com

REGISTERED PROFESSIONAL ENGINEER
PETER H. HAASE
NO. 055605
EXP. 12/31/20
CIVIL
STATE OF CALIFORNIA

DRAWN BY:	JRS
CHECKED BY:	CJC/PHH
DATE:	SEPTEMBER 1, 2020
JOB NO:	19-268
SCALE:	AS SHOWN
SHEET:	WW0.0

20 OF 20

22"x 34" SHEET; IF SHEET SIZE IS SMALLER, DRAWING HAS BEEN REDUCED.

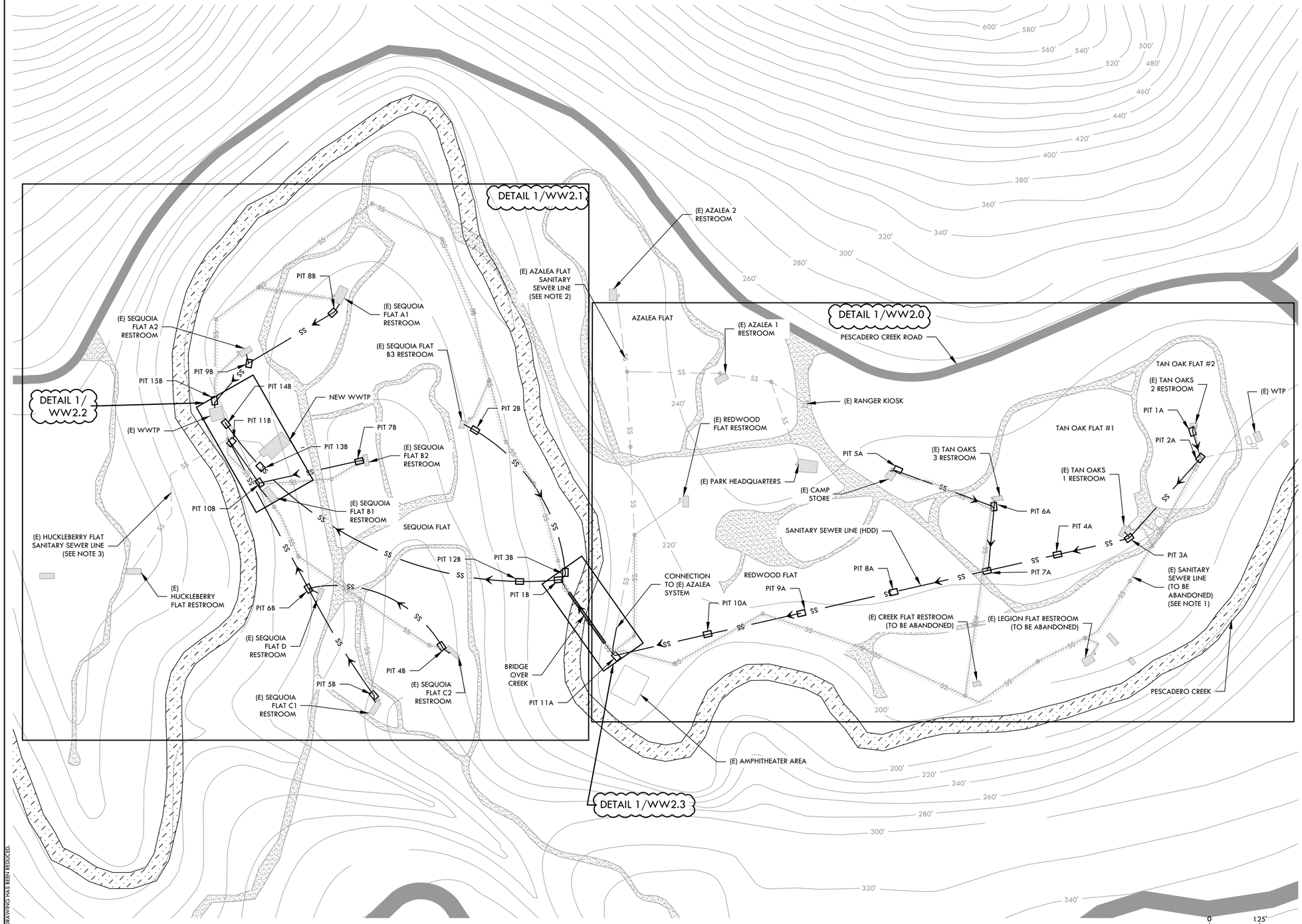

LEGEND

250'	CONTOUR LINE
SS	(E) SANITARY SEWER LINE TO BE DECOMMISSIONED (SEE NOTE 1)
SS	(E) SANITARY SEWER LINE
SS	SANITARY SEWER LINE
	(E) CREEK
	(E) COUNTY ROAD
	(E) MEMORIAL PARK ROAD
	(E) BUILDING
	PIT FOR HDD
	FLOW ARROW

NOTES:

1. EXISTING SEWER PIPES SHALL BE GROUT FILLED AND DECOMMISSIONED (SEE NOTE 2 AND 3 FOR EXCEPTIONS), AND EXISTING MANHOLE STRUCTURES SHALL BE REMOVED AND FILLED WITH COMPACTED EARTH. IN SOME INSTANCES PROPOSED SEWER PIPE IS SHOWN ON TOP OF EXISTING SEWER PIPE. IN THESE CASES THE NEW PIPE WILL BE PLACED PARALLEL TO THE EXISTING PIPE. MAINTAIN 5' OF HORIZONTAL SEPARATION BETWEEN PARALLEL EXISTING AND NEW LINES WHERE POSSIBLE.
2. THE AZALEA FLAT COLLECTION SYSTEM (REDWOOD FLAT RESTROOM, PARK HEADQUARTERS, RANGER KIOSK, AZALEA 1 RESTROOM, AND AZALEA 2 RESTROOM) WAS REPLACED RECENTLY AND SHALL REMAIN IN PLACE. THE CONTRACTOR SHALL INTERCEPT THE AZALEA FLAT LINE UPSTREAM OF THE BRIDGE MANHOLE, TO RAISE THE PIPE IN ORDER TO ACCOMMODATE THE NEW MANHOLE INVERTS.
3. THE HUCKLEBERRY FLAT SANITARY SEWER LINE WAS REPLACED RECENTLY AND SHALL REMAIN IN PLACE.

ABBREVIATIONS

(E)	EXISTING
HDD	HORIZONTAL DIRECTIONAL DRILLING
SS	SANITARY SEWER
WTP	WATER TREATMENT PLANT
WWTP	WASTEWATER TREATMENT PLANT

1 SITE IMPROVEMENT PLAN

SCALE: 1" = 125' @ 22"X34"

22"X34" SHEET. IF SHEET SIZE IS SMALLER, DRAWING HAS BEEN REDUCED.

SHEET TITLE:
SITE IMPROVEMENT PLAN

CLIENT:
SAN MATEO COUNTY PARKS
ATTN: MARIO NASTARI
4555 COUNTY CENTER, 4TH FLOOR
REDWOOD CITY, CA 94063
TEL: (650) 363-4020

PROJECT TITLE:
WASTEWATER SYSTEM IMPROVEMENTS
MEMORIAL PARK, 9500 PESCADERO CREEK RD
LOMA MAR, CA 94021

SHERWOOD DESIGN ENGINEERS
1525 Seabright Ave
Santa Cruz, CA 95062
www.sherwoodengineers.com

REGISTERED PROFESSIONAL ENGINEER
PETER H. HUNG
NO. 055605
EXP. 12/31/20
CIVIL
STATE OF CALIFORNIA

DRAWN BY:	JRS
CHECKED BY:	CJC/PHH
DATE:	SEPTEMBER 1, 2020
JOB NO:	19-268
SCALE:	AS SHOWN
SHEET:	WW1.0

LEGEND

- 250' — CONTOUR LINE
- (E) FENCE
- (E) SANITARY SEWER LINE TO BE DECOMMISSIONED (SEE NOTE 2)
- (E) SANITARY SEWER LINE
- (E) WATER LINE
- SANITARY SEWER PIPE
- HDD SANITARY SEWER PIPE
- (E) CREEK
- (E) COUNTY ROAD
- (E) MEMORIAL PARK ROAD
- (E) BUILDING
- PIT FOR HDD
- SANITARY SEWER MANHOLE
- SANITARY SEWER CLEANOUT
- (E) SANITARY SEWER MANHOLE
- (E) SANITARY SEWER CLEANOUT
- (E) TREE WITH DRIPLINE
- FLOW ARROW

ABBREVIATIONS

CO	CLEANOUT
(E)	EXISTING
ELEV	ELEVATION
GS	GROUND SURFACE
HDD	HORIZONTAL DIRECTIONAL DRILLING
INV	INVERT
MH	MANHOLE
(N)	NEW
R	RADIUS
SS	SANITARY SEWER
UNK	UNKNOWN
WTP	WATER TREATMENT PLANT
WWTP	WASTEWATER TREATMENT PLANT

PIPE SCHEDULE

#	TYPE	LENGTH (FT)	LOCATION
1A	4" HDPE	70	PIT 1A TO PIT 2A
2A	6" HDPE	268	PIT 2A TO PIT 3A
3A	6" HDPE	182	PIT 3A TO PIT 4A
4A	6" HDPE	182	PIT 4A TO PIT 7A
5A	4" HDPE	260	PIT 5A TO PIT 6A
6A	4" HDPE	157	PIT 6A TO PIT 7A
7A	6" HDPE	236.5	PIT 7A TO PIT 8A
8A	6" HDPE	236.5	PIT 8A TO PIT 9A
9A	6" HDPE	236.5	PIT 9A TO PIT 10A
10A	6" HDPE	236.5	PIT 10A TO PIT 11A
11A	6" HDPE	63	OPEN TRENCH TO MH-A2

NOTES:

1. PITS NOT SHOWN TO SCALE IN THIS DRAWING. THE PITS SHALL BE CONSTRUCTED TO MINIMIZE DISTRUBANCE TO THE SURROUNDING AREA. PIT DEPTHS ARE DEPENDANT ON RIM AND INVERT ELEVATIONS LISTED AT EACH PIT.
2. EXISTING SEWER PIPES SHALL BE GROUT FILLED AND DECOMMISSIONED (SEE NOTE 3 FOR EXCEPTIONS) AND EXISTING MANHOLE STRUCTURES SHALL BE REMOVED AND FILLED WITH COMPACTED EARTH. EXISTING CLEANOUTS SHALL BE REMOVED AND THE REMAINING LINE CAPPED IN PLACE. IN SOME INSTANCES, PROPOSED SEWER PIPE IS SHOWN ON TOP OF EXISTING SEWER PIPE. IN THESE CASES THE NEW PIPE WILL BE PLACED PARALLEL TO THE EXISTING PIPE. MAINTAIN 5' OF HORIZONTAL SEPARATION BETWEEN PARALLEL EXISTING AND NEW LINES WHERE POSSIBLE.
3. THE AZALEA FLAT COLLECTION SYSTEM (REDWOOD FLAT RESTROOM, PARK HEADQUARTERS, RANGER KIOSK, AZALEA 1 RESTROOM, AND AZALEA 2 RESTROOM) WAS REPLACED RECENTLY AND SHALL REMAIN IN PLACE. ALL STRUCTURES AND PIPE SHOWN UPSTREAM OF THE NEW CONNECTION SHALL REMAIN IN PLACE. THE CONTRACTOR SHALL INTERCEPT THE AZALEA FLAT LINE APPROXIMATELY 64' UPSTREAM OF THE BRIDGE MANHOLE AND RAISE THE PIPE IN ORDER TO MEET THE NEW MANHOLE INVERTS.
4. ALL SEWER PIPES MUST MAINTAIN A MINIMUM OF 2' OF COVER.
5. CONTOUR LINES SHOWN WERE GENERATED FROM LIDAR IMAGES. THESE VALUES ARE APPROXIMATIONS, AND ARE ONLY SHOWN TO HIGHLIGHT GENERAL TOPOGRAPHY OF THE SITE. REFER TO MANHOLE RIM AND INVERT ELEVATIONS SHOWN FOR PIPE PLACEMENT.
6. FOR MORE DETAILED SURVEY INFORMATION ON TAN OAKS 1 RESTROOM REFER TO THE INFORMATIONAL SHEET ON PAGE 11.
7. IN SOME LOCATIONS MULTIPLE CLEANOUTS ARE SHOWN AT THE SAME LOCATION. THESE ARE SEPARATE ADJACENT CLEANOUTS AND SHOULD NOT BE INSTALLED AS A DOUBLE CLEANOUT. SEE DETAIL 2 ON SHEET WW3.0 FOR MORE INFORMATION.
8. THE SURVEY OF THESE LOCATIONS WERE NOT AVAILABLE. THE RIM AND GS ELEVATIONS THAT ARE SHOWN ARE APPROXIMATED USING THE AVAILABLE LIDAR DATA. DUE TO LIDAR BEING SLIGHTLY INACCURATE THESE ELEVATIONS COULD BE OFF BY ± 5'. RIM AND GS ELEVATIONS LISTED ARE SHOWN AS 5' HIGHER THAN WHAT THE LIDAR CONTOURS INDICATE IN ORDER TO BE CONSERVATIVE AND TO GIVE A ROUGH ESTIMATE OF THE DEPTH OF THE PIPE INVERTS. THE CONTRACTOR IS RESPONSIBLE FOR PERFORMING SUPPLEMENTAL SURVEYS TO VERIFY GROUND ELEVATIONS AND CORRESPONDING RIM ELEVATIONS FOR THESE SECTIONS. THE CONTRACTOR SHALL INSTALL THESE LINES WITH A MINIMUM OF 2% SLOPE FOR 4" LINES AND 1.1% SLOPE FOR 6" LINES, AND A MINIMUM OF 2' COVER FOR ALL LINES.
9. THE LEGION FLAT AND CREEK FLAT RESTROOMS ARE BEING REMOVED FROM THE WASTEWATER COLLECTION SYSTEM TO ALLOW THE SEWER LINE TO BE REROUTED UPSTREAM OF THE BRIDGE, WHICH WILL ALLOW THE PIPELINE CROSSING TO BE RAISED ACROSS THE BRIDGE.
10. THE SEWER LINE THAT COLLECTS FROM THE WTP WAS RECENTLY REPLACED AND SHALL REMAIN IN PLACE.

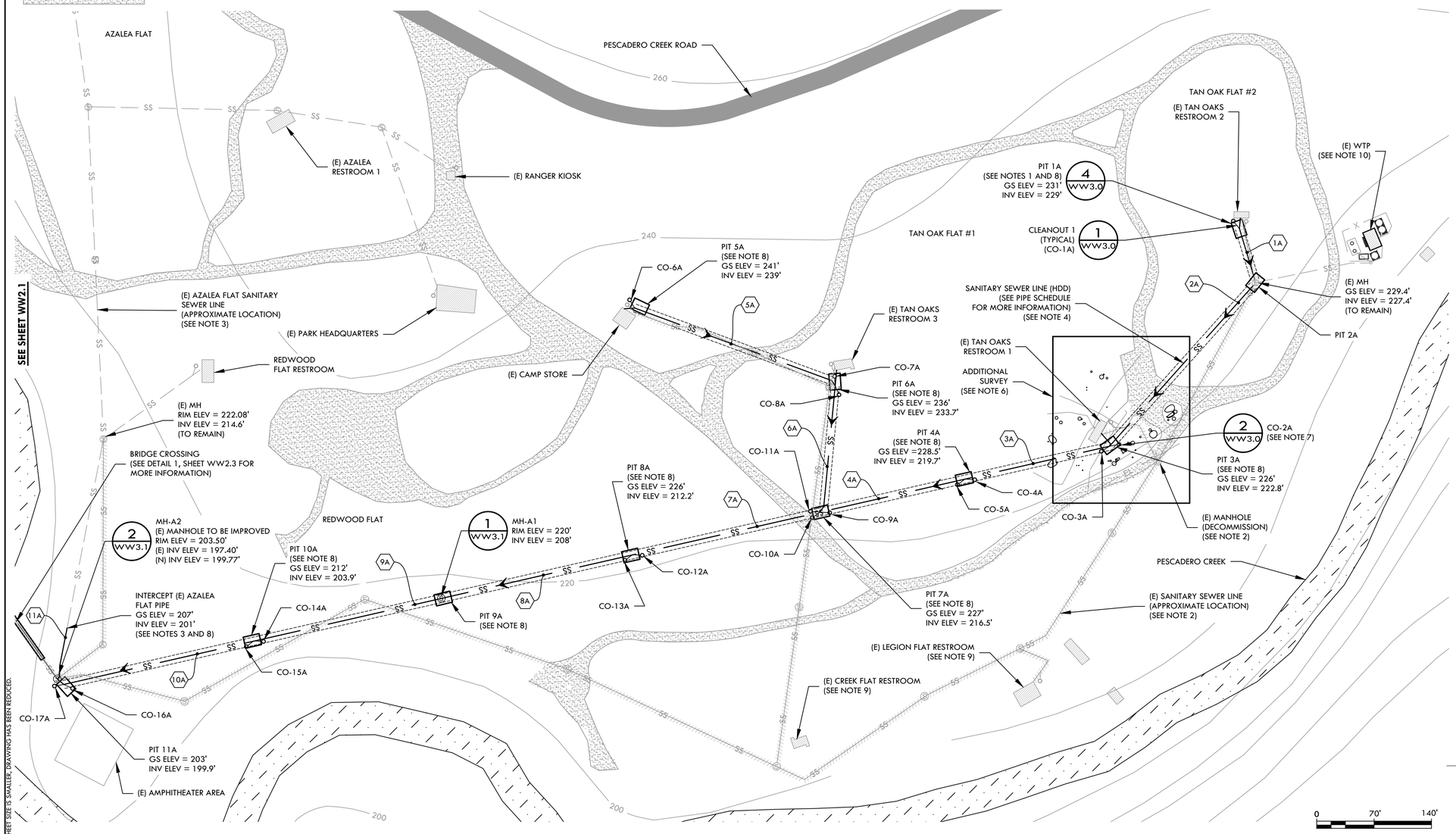

1 SITE IMPROVEMENT PLAN - HDD FOR TAN OAK FLAT AND REDWOODFLAT

SCALE: 1" = 70' @ 22"X34"

22"x 34" SHEET; IF SHEET SIZE IS SMALLER, DRAWING HAS BEEN REDUCED.

SHEET TITLE:
SITE IMPROVEMENT PLAN - TAN OAK FLAT AND REDWOOD FLAT

CLIENT:
SAN MATEO COUNTY PARKS
ATTN: MARIO NASTARI
4555 COUNTY CENTER, 4TH FLOOR
REDWOOD CITY, CA 94063
TEL: (650) 363-4020

PROJECT TITLE:
WASTEWATER SYSTEM IMPROVEMENTS
MEMORIAL PARK, 9500 PESCADERO CREEK RD
LOMA MAR, CA 94021

SHERWOOD DESIGN ENGINEERS
1525 Seabright Ave
Santa Cruz, CA 95062
www.sherwoodengineers.com

REGISTERED PROFESSIONAL ENGINEER CHRISTOPHER H. JOHNSON NO. 055605 EXP. 12/31/20 CIVIL STATE OF CALIFORNIA

DRAWN BY:	JRS
CHECKED BY:	CJC/PHH
DATE:	SEPTEMBER 1, 2020
JOB NO:	19-268
SCALE:	AS SHOWN
SHEET:	WW2.0

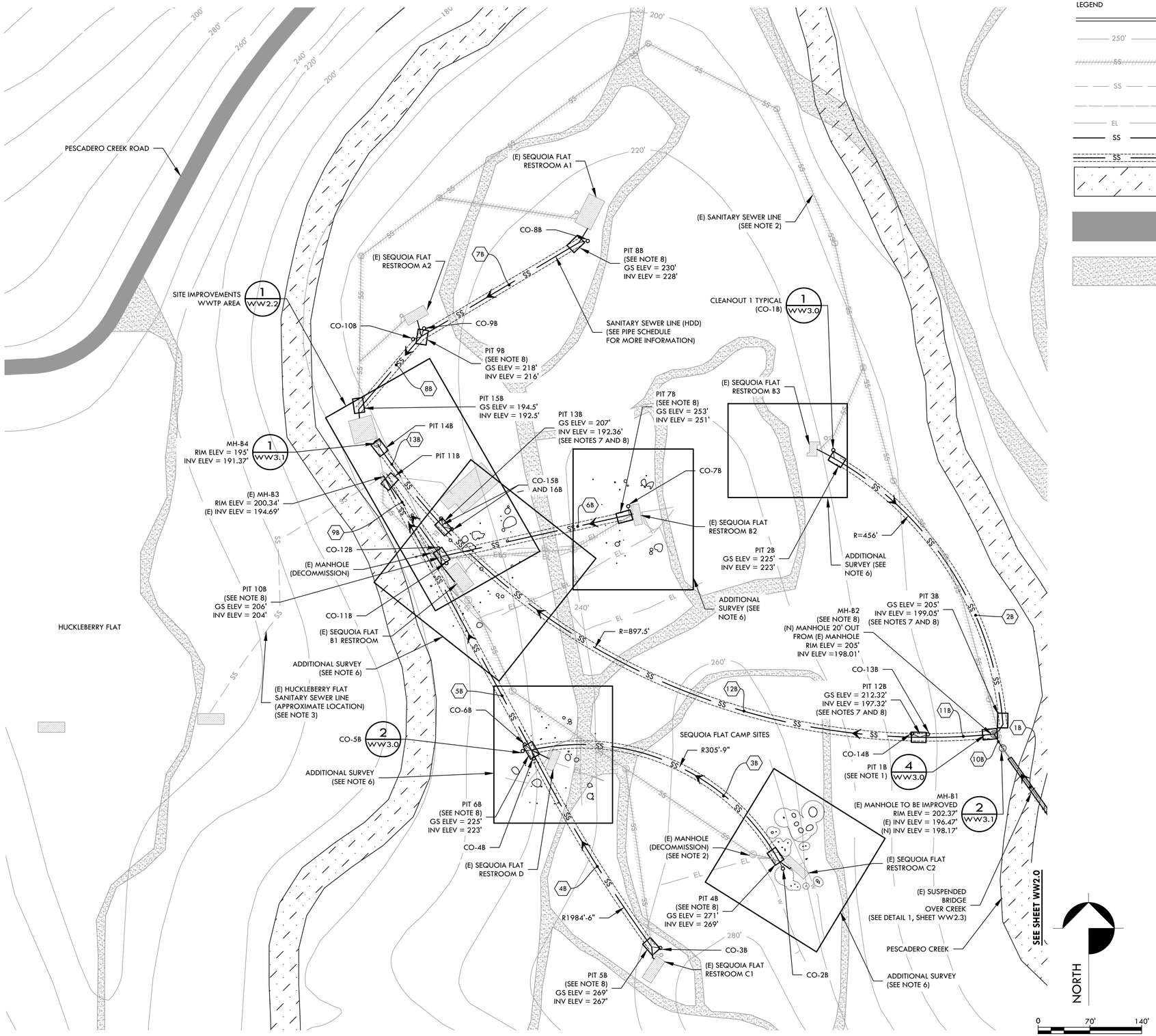

1 SITE IMPROVEMENT PLAN - HDD FOR SEQUOIA FLAT

SCALE: 1" = 70' @ 22"X34"

22"X34" SHEET. IF SHEET SIZE IS SMALLER, DRAWING HAS BEEN REDUCED.

LEGEND

250'	CONTOUR LINE
SS	(E) SANITARY SEWER LINE TO BE DECOMMISSIONED (SEE NOTE 2)
SS	(E) SANITARY SEWER LINE
	(E) WATER LINE
EL	(E) ELECTRICAL LINE
SS	SANITARY SEWER PIPE
SS	HDD SANITARY SEWER PIPE
	(E) CREEK
	(E) COUNTY ROAD
	(E) MEMORIAL PARK ROAD
	(E) BUILDING
	PIT FOR HDD
	SANITARY SEWER MANHOLE
	SANITARY SEWER CLEANOUT
	(E) SANITARY SEWER MANHOLE
	(E) SANITARY SEWER CLEANOUT
	(E) TREE WITH DRIPLINE
	FLOW ARROW

ABBREVIATIONS

CO	CLEANOUT	(N)	NEW
(E)	EXISTING	R	RADIUS
ELEV	ELEVATION	SS	SANITARY SEWER
GS	GROUND SURFACE	UNK	UNKNOWN
HDD	HORIZONTAL DIRECTIONAL DRILLING	WTP	WATER TREATMENT PLANT
INV	INVERT	WWTP	WASTEWATER TREATMENT PLANT
MH	MANHOLE		

NOTES:

1. PITS NOT SHOWN TO SCALE IN THIS DRAWING. THE PITS SHALL BE CONSTRUCTED TO MINIMIZE DISTURBANCE TO THE SURROUNDING AREA. PIT DEPTHS ARE DEPENDANT ON RIM AND INVERT ELEVATIONS LISTED AT EACH PIT.
2. EXISTING SEWER PIPES SHALL BE GROUT FILLED AND DECOMMISSIONED (SEE NOTE 3 FOR EXCEPTIONS) AND EXISTING MANHOLE STRUCTURES SHALL BE REMOVED AND FILLED WITH COMPACTED EARTH. EXISTING CLEANOUTS SHALL BE REMOVED AND THE REMAINING LINE CAPPED IN PLACE. IN SOME INSTANCES, PROPOSED SEWER PIPE IS SHOWN ON TOP OF EXISTING SEWER PIPE. IN THESE CASES THE NEW PIPE WILL BE PLACED PARALLEL TO THE EXISTING PIPE. MAINTAIN 5' OF HORIZONTAL SEPARATION BETWEEN PARALLEL EXISTING AND NEW LINES WHERE POSSIBLE.
3. THE HUCKLEBERRY FLAT SANITARY SEWER LINE WAS REPLACED RECENTLY AND SHALL REMAIN IN PLACE.
4. ALL SEWER PIPES MUST MAINTAIN A MINIMUM OF 2' OF COVER.
5. CONTOUR LINES SHOWN WERE GENERATED FROM LIDAR IMAGES. THESE VALUES ARE APPROXIMATIONS, AND ARE ONLY SHOWN TO HIGHLIGHT GENERAL TOPOGRAPHY OF THE SITE. REFER TO MANHOLE RIM AND INVERT ELEVATIONS SHOWN FOR PIPE PLACEMENT.
6. FOR MORE DETAILED SURVEY INFORMATION ON SEQUOIA FLAT B1, B2, B3, C2, AND D RESTROOM BUILDINGS, SEE THE INFORMATIONAL SHEETS AT THE END OF THE PLAN SET.
7. FOR PIT 12B AND PIT 13B INSTALL THE CLEANOUTS AT A LOCATION WHERE THE DEPTH IS NO MORE THAN 15'. THE LENGTH OF PIPE SEGMENT 11B, 12B, AND 13B, AND THE PIPE INVERTS AT PIT 12B AND PIT 13B ARE SUBJECT TO CHANGE AS THE CLEANOUT LOCATIONS CHANGE TO MEET THIS 15' DEPTH REQUIREMENT.
8. THE SURVEY OF THESE LOCATIONS WERE NOT AVAILABLE. THE RIM AND GS ELEVATIONS THAT ARE SHOWN ARE APPROXIMATED USING THE AVAILABLE LIDAR DATA. DUE TO LIDAR BEING SLIGHTLY INACCURATE THESE ELEVATIONS COULD BE OFF BY ± 5'. RIM AND GS ELEVATIONS LISTED ARE SHOWN AS 5' HIGHER THAN WHAT THE LIDAR CONTOURS INDICATE IN ORDER TO BE CONSERVATIVE AND TO GIVE A ROUGH ESTIMATE OF THE DEPTH OF THE PIPE INVERTS. THE CONTRACTOR IS RESPONSIBLE FOR PERFORMING SUPPLEMENTAL SURVEYS TO VERIFY GROUND ELEVATIONS AND CORRESPONDING RIM ELEVATIONS FOR THESE SECTIONS. THE CONTRACTOR SHALL INSTALL THESE LINES WITH A MINIMUM OF 2% SLOPE FOR 4" LINES AND 1.1% SLOPE FOR 6" LINES, AND A MINIMUM OF 2' COVER FOR ALL LINES.

PIPE SCHEDULE

#	TYPE	LENGTH (FT)	LOCATION
1B	6" HDPE	200	PIT 11A TO PIT 1B
2B	4" HDPE	460	PIT 2B TO PIT 3B
3B	4" HDPE	395	PIT 4B TO PIT 6B
4B	4" HDPE	315	PIT 5B TO PIT 6B
5B	6" HDPE	425	PIT 6B TO PIT 11B
6B	4" HDPE	275	PIT 7B TO PIT 10B
7B	4" HDPE	250	PIT 8B TO PIT 9B
8B	6" HDPE	125	PIT 9B TO PIT 15B
9B	4" HDPE	135	PIT 10B TO PIT 11B
10B	6" HDPE	20	MH-B1 TO MH-B2
11B	8" HDPE	100	PIT 1B TO PIT 12B
12B	8" HDPE	732	PIT 12B TO PIT 13B
13B	8" HDPE	135	PIT 13B TO PIT 14B

SHEET TITLE:
SITE IMPROVEMENT PLAN - SEQUOIA FLAT

CLIENT:
SAN MATEO COUNTY PARKS
ATTN: MARIO NASTARI
4555 COUNTY CENTER, 4TH FLOOR
REDWOOD CITY, CA 94063
TEL: (650) 363-4020

PROJECT TITLE:
WASTEWATER SYSTEM IMPROVEMENTS
MEMORIAL PARK, 9500 PESCADERO CREEK RD
LOMA MAR, CA 94021

SHERWOOD DESIGN ENGINEERS
1525 Seabright Ave
Santa Cruz, CA 95062
www.sherwoodengineers.com

REGISTERED PROFESSIONAL ENGINEER
PETER H. HUNT
NO. 055605
EXP. 12/31/20
CIVIL
STATE OF CALIFORNIA

DRAWN BY:	JRS
CHECKED BY:	CJC/PHH
DATE:	SEPTEMBER 1, 2020
JOB NO:	19-268
SCALE:	AS SHOWN
SHEET:	WW2.1

LEGEND

- CONTOUR LINE (250')
- (E) SANITARY SEWER LINE TO BE DECOMMISSIONED
- (E) SANITARY SEWER LINE
- (E) WATER LINE
- (E) ELECTRICAL LINE
- (E) SANITARY SEWER FORCE MAIN
- (E) GAS LINE
- SANITARY SEWER LINE
- HDD SANITARY SEWER LINE
- (E) CREEK
- (E) COUNTY ROAD
- (E) MEMORIAL PARK ROAD
- (E) BUILDING
- PIT FOR HDD
- SANITARY SEWER MANHOLE
- SANITARY SEWER CLEANOUT
- (E) TREE WITH DRIPLINE
- FLOW ARROW

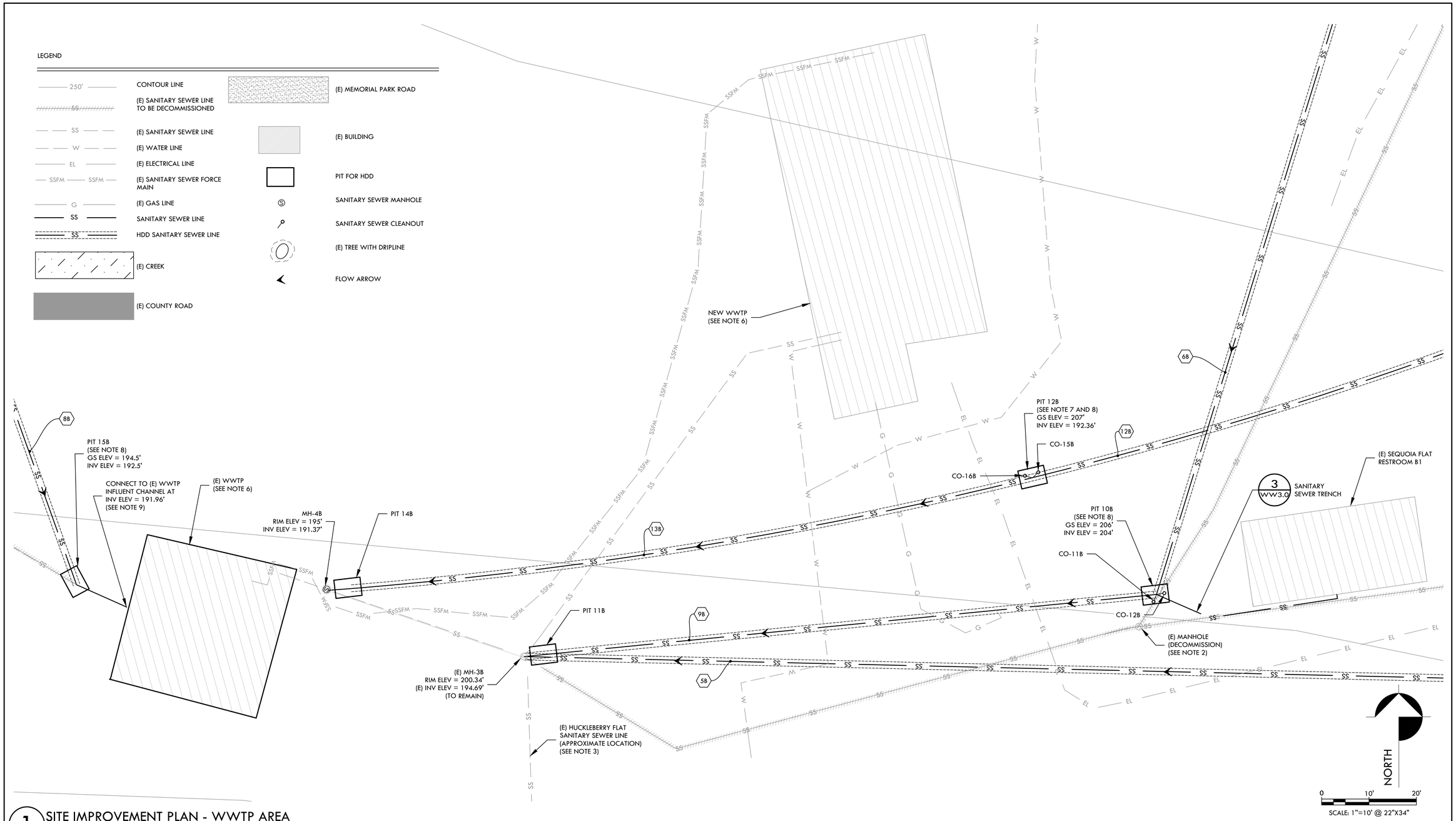

1 SITE IMPROVEMENT PLAN - WWTP AREA

SCALE: 1" = 10' @ 22"X34"

PIPE SCHEDULE			
#	TYPE	LENGTH (FT)	LOCATION
5B	6" HDPE	425	PIT 6B TO PIT 11B
6B	4" HDPE	275	PIT 7B TO PIT 10B
8B	6" HDPE	125	PIT 9B TO PIT 15B
9B	4" HDPE	135	PIT 10B TO PIT 11B
12B	8" HDPE	732	PIT 12B TO PIT 13B
13B	8" HDPE	135	PIT 13B TO PIT 14B

NOTES:

1. PITS NOT SHOWN TO SCALE IN THIS DRAWING. THE PITS SHALL BE CONSTRUCTED TO MINIMIZE DISTRUBANCE TO THE SURROUNDING AREA. PIT DEPTHS ARE DEPENDANT ON RIM AND INVERT ELEVATIONS LISTED AT EACH PIT.
2. EXISTING SEWER PIPES SHALL BE GROUT FILLED AND DECOMMISSIONED (SEE NOTE 3 FOR AN EXCEPTION) AND EXISTING MANHOLE STRUCTURES SHALL BE REMOVED AND FILLED WITH COMPACTED EARTH. EXISTING CLEANOUTS SHALL BE REMOVED AND THE REMAINING LINE CAPPED IN PLACE. IN SOME INSTANCES, PROPOSED SEWER PIPE IS SHOWN ON TOP OF EXISTING SEWER PIPE. IN THESE CASES THE NEW PIPE WILL BE PLACED PARALLEL TO THE EXISTING PIPE. PARALLEL PIPE MUST MAINTAIN A MINIMUM OF 5' SEPARATION BETWEEN NEW AND EXISTING PIPE.
3. THE HUCKLEBERRY FLAT SANITARY SEWER LINE WAS REPLACED RECENTLY AND SHALL REMAIN IN PLACE.
4. ALL SEWER PIPES MUST MAINTAIN A MINIMUM OF 2' OF COVER.
5. CONTOUR LINES SHOWN WERE GENERATED FROM LIDAR IMAGES. THESE VALUES ARE APPROXIMATIONS, AND ARE ONLY SHOWN TO HIGHLIGHT GENERAL TOPOGRAPHY OF THE SITE. REFER TO MANHOLE RIM AND INVERT ELEVATIONS SHOWN FOR PIPE PLACEMENT.
6. THESE PLANS ONLY COVER THE COLLECTION SYSTEM UP TO THE EXISTING MANHOLE AT PIT 10B, THE NEW MANHOLE AT PIT 13B, AND THE EXISTING TRANSITE CONNECTION TO THE INFLUENT CHANNEL. THE NEW WWTP IS NOT PART OF THIS PROJECT AND WILL BE DESIGNED BY OTHERS.
7. FOR PIT 12B INSTALL THE CLEANOUTS AT A LOCATION WHERE THE DEPTH IS NO MORE THAN 15'. THE LENGTH OF PIPE SEGMENT 12B AND 13B, AND THE PIPE INVERT AT PIT 12B IS SUBJECT TO CHANGE AS THE CLEANOUT LOCATIONS CHANGE TO MEET THIS 15' DEPTH REQUIREMENT
8. THE SURVEY OF THESE LOCATIONS WERE NOT AVAILABLE. THE RIM AND GS ELEVATIONS THAT ARE SHOWN ARE APPROXIMATED USING THE AVAILABLE LIDAR DATA. DUE TO LIDAR BEING SLIGHTLY INACCURATE THESE ELEVATIONS COULD BE OFF BY ± 5'. RIM AND GS ELEVATIONS LISTED ARE SHOWN AS 5' HIGHER THAN WHAT THE LIDAR CONTOURS INDICATE IN ORDER TO BE CONSERVATIVE AND TO GIVE A ROUGH ESTIMATE OF THE DEPTH OF THE PIPE INVERTS. THE CONTRACTOR IS RESPONSIBLE FOR PERFORMING SUPPLEMENTAL SURVEYS TO VERIFY GROUND ELEVATIONS AND CORRESPONDING RIM ELEVATIONS FOR THESE SECTIONS. THE CONTRACTOR SHALL INSTALL THESE LINES WITH A MINIMUM OF 2% SLOPE FOR 4" LINES AND 1.1% SLOPE FOR 6" LINES, AND A MINIMUM OF 2' COVER FOR ALL LINES.
9. THE CONTRACTOR SHALL CONNECT TO THE INFLUENT CHANNEL AT THE EXISTING 8" ASBESTOS CONCRETE PIPE OUTSIDE THE BUILDING.

ABBREVIATIONS

CO	CLEANOUT	(N)	NEW
(E)	EXISTING	R	RADIUS
ELEV	ELEVATION	SS	SANITARY SEWER
GS	GROUND SURFACE	UNK	UNKNOWN
HDD	HORIZONTAL DIRECTIONAL DRILLING	WTP	WATER TREATMENT PLANT
INV	INVERT	WWTP	WASTEWATER TREATMENT PLANT
MH	MANHOLE		

22"x34" SHEET. IF SHEET SIZE IS SMALLER, DRAWING HAS BEEN REDUCED.

SHEET TITLE: WWTP IMPROVEMENT PLAN

CLIENT: SAN MATEO COUNTY PARKS
ATTN: MARIO NASTARI
4555 COUNTY CENTER, 4TH FLOOR
REDWOOD CITY, CA 94063
TEL: (650) 363-4020

PROJECT TITLE: WASTEWATER SYSTEM IMPROVEMENTS
MEMORIAL PARK, 9500 PESCADERO CREEK RD
LOMA MAR, CA 94021

SHERWOOD DESIGN ENGINEERS
1525 Seabright Ave
Santa Cruz, CA 95062
www.sherwoodengineers.com

REGISTERED PROFESSIONAL ENGINEER PETER H. HART NO. 055605 EXP. 12/31/20 CIVIL STATE OF CALIFORNIA

DRAWN BY:	JRS
CHECKED BY:	CJC/PHH
DATE:	SEPTEMBER 1, 2020
JOB NO:	19-268
SCALE:	AS SHOWN
SHEET:	WW2.2

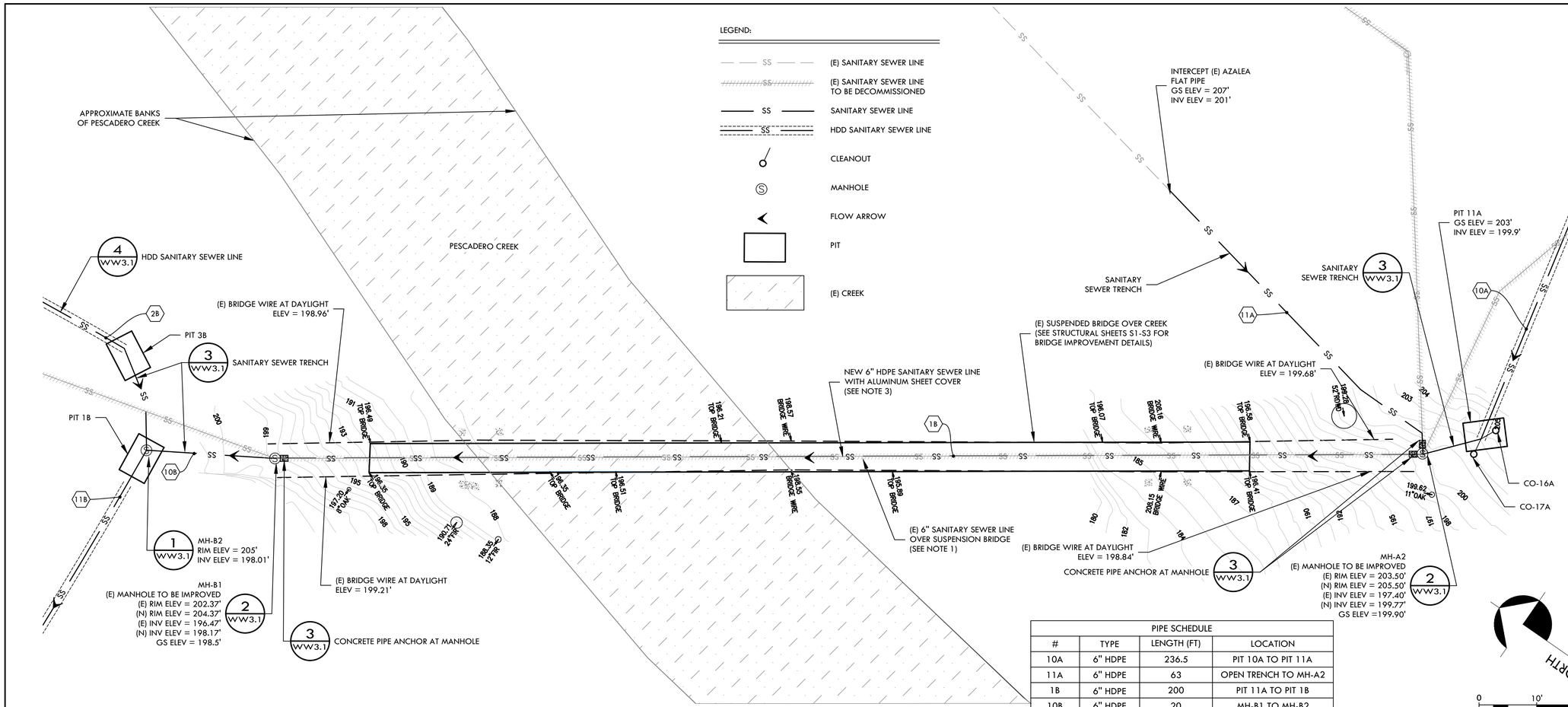

PIPE SCHEDULE			
#	TYPE	LENGTH (FT)	LOCATION
10A	6" HDPE	236.5	PIT 10A TO PIT 11A
11A	6" HDPE	63	OPEN TRENCH TO MH-A2
1B	6" HDPE	200	PIT 11A TO PIT 1B
10B	6" HDPE	20	MH-B1 TO MH-B2
2B	4" HDPE	460	PIT 2B TO PIT 3B
11B	8" HDPE	100	PIT 1B TO PIT 12B

1 BRIDGE IMPROVEMENT PLAN

SCALE: 1" = 10' @ 22"X34"

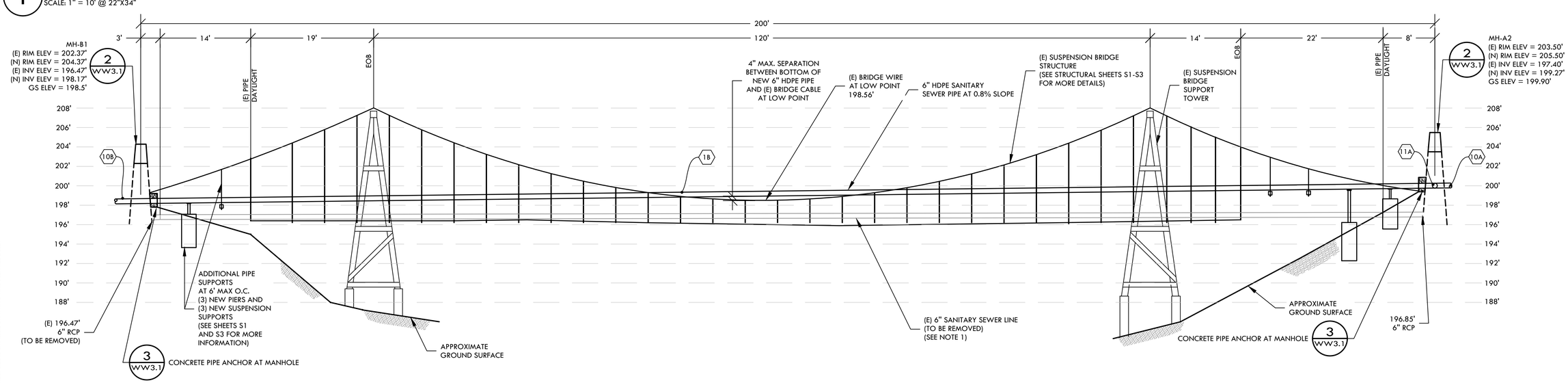

2 BRIDGE SECTION VIEW

SCALE: AS SHOWN

NOTES:

1. SCHEDULE FOR DECOMMISSIONING OF BRIDGE LINE SHOULD PROCEED AS FOLLOWS:
   - 1.1. ALL IMPROVEMENTS UPSTREAM OF THE BRIDGE SHALL BE COMPLETED BEFORE BRIDGE IMPROVEMENTS ARE STARTED.
   - 1.2. SHUTDOWN ALL FACILITIES AND CONNECTIONS THROUGH COORDINATION WITH PARKS, SO THAT ALL FLOW FROM THE UPSTREAM SIDE OF THE BRIDGE IS STOPPED. ADD BYPASS LINES IF NEEDED.
   - 1.3. PUMP OUT THE REMAINING SEWAGE.
   - 1.4. PLUG MANHOLES ON EITHER SIDE OF THE BRIDGE AND FLUSH THE LINE WITH CLEAN WATER TO ENSURE THERE IS NO REMAINING SEWAGE IN THE BRIDGE LINE.
   - 1.5. REMOVE THE EXISTING PIPE ACROSS THE BRIDGE.
   - 1.6. PERFORM MANHOLE IMPROVEMENTS PER DETAIL 2 ON SHEET WW3.1 AND INSTALL THE SEWER LINE ACROSS THE BRIDGE AS SPECIFIED ON SHEET S2 ON THE STRUCTURAL PLANS.
   - 1.7. RECONNECT THE BRIDGE LINE TO THE WASTEWATER COLLECTION SYSTEM.
2. MINIMIZE SHUTDOWN OF THE SYSTEM TO NO MORE THAN 5-DAYS.
3. THE NEW PIPE ACROSS THE BRIDGE SHALL HAVE AN ALUMINUM SHEET COVER OVER THE LENGTH OF THE EXPOSED PIPE. THE ALUMINUM SHEET SHALL BE TERMINATED DIRECTLY UPSTREAM OF THE CONCRETE ANCHOR AT THE MANHOLE. SEE DETAIL 5 ON SHEET S2 FOR MORE INFORMATION.

ABBREVIATIONS

(E)	EXISTING
ELEV	ELEVATION
GS	GROUND SURFACE
HDPE	HIGH-DENSITY POLYETHYLENE
INV	INVERT
O.C.	ON CENTER
RCP	REINFORCED CONCRETE PIPE
RDWD	REDWOOD
SS	SANITARY SEWER
TYP	TYPICAL

SHEET TITLE: BRIDGE IMPROVEMENT PLAN

CLIENT: SAN MATEO COUNTY PARKS
ATTN: MARIO NASTARI
4555 COUNTY CENTER, 4TH FLOOR
REDWOOD CITY, CA 94063
TEL: (650) 363-4020

PROJECT TITLE: WASTEWATER SYSTEM IMPROVEMENTS
MEMORIAL PARK, 9500 PESCADERO CREEK RD
LOMA MAR, CA 94021

SHERWOOD DESIGN ENGINEERS
1525 Seabright Ave
Santa Cruz, CA 95062
www.sherwoodengineers.com

REGISTERED PROFESSIONAL ENGINEER
PETER H. HUNG
NO. 055605
EXP. 12/31/20
CIVIL
STATE OF CALIFORNIA

DRAWN BY:	JRS
CHECKED BY:	CJC/PHH
DATE:	SEPTEMBER 1, 2020
JOB NO:	19-268
SCALE:	AS SHOWN
SHEET:	WW2.3

6 OF 20

22"x34" SHEET. IF SHEET SIZE IS SMALLER, DRAWING HAS BEEN REDUCED.

SAN MATEO COUNTY DEPARTMENT
OF
PUBLIC WORKS

REDWOOD CITY
CALIFORNIA

DRAWN BY: N.M.
CHECK BY: A.M.S.
APPROVED BY: N.R.C.

SCALE: NONE
DATE: 8/06
REVISED:

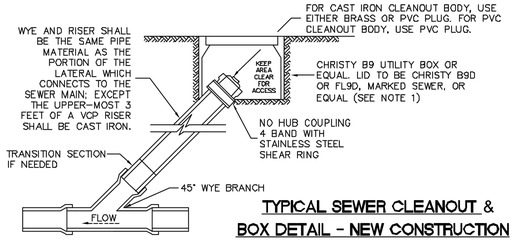

TYPICAL SEWER CLEANOUT & BOX DETAIL - NEW CONSTRUCTION

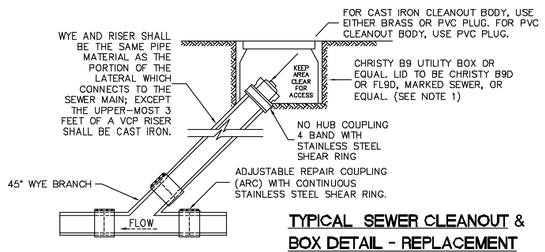

TYPICAL SEWER CLEANOUT & BOX DETAIL - REPLACEMENT

NOTES:

1. WHEN BOX IS SUBJECT TO TRAFFIC LOADING, PROVIDE CAST IRON LID.
2. BOX TO BE PLACED SUCH THAT CLEANOUT CAP CAN BE EASILY REMOVED, SEE ILLUSTRATION.
3. PROPERTY OWNER IS RESPONSIBLE FOR MAINTAINING LATERAL FROM THE PROPERTY STRUCTURE TO DISTRICT MAIN. DISTRICT PROVIDES COURTESY SERVICE FROM DISTRICT STANDARD PROPERTY LINE CLEANOUT TO THE MAIN.
4. SDR-26 WYE, RISER, CLEANOUT BODY AND CAP CAN BE USED ONLY WHEN LATERAL FROM PROPERTY LINE TO MAIN LINE IS REPLACED WITH SDR-26.
5. WHEN ENTIRE LATERAL IS REPLACED, LATERAL FROM PROPERTY LINE CLEANOUT TO MAIN LINE SHALL HAVE A 14-1-UF GUAGE MINIMUM SINGLE CONDUCTOR TRACER WIRE TAPED TO THE ENTIRE LENGTH OF THE PIPE.

CONSTRUCTION OF A STANDARD CLEANOUT REQUIRES MULTIPLE INSPECTIONS BY DISTRICT PERSONEL:
1. FIRST INSPECTION – TO INSPECT WYE AND RISER, WYE AND RISER MUST BE EXPOSED.
2. SECOND INSPECTION – TO INSPECT PLACEMENT OF BOX, LID AND LOCATION OF CLEANOUT WITHIN BOX .

1 TYPICAL CLEANOUT DETAILS

SCALE: AS DIMENSIONED

NOTES:

1. 90° VERTICAL SECTIONS OF THE ADJACENT CLEANOUTS SHALL BE MAXIMIZED IN LENGTH AND 45° WYE LENGTHS SHALL BE MINIMIZED TO REDUCE OVERALL HDD PIT LENGTH.
2. OTHER THAN THE VERTICAL PORTION OF THE MULTIPLE CLEANOUT DETAIL, OTHER SPECIFICATIONS SHALL FOLLOW DETAIL 1.

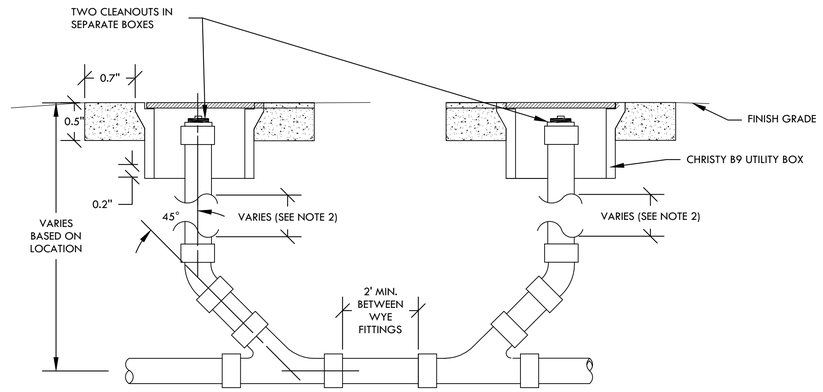

2 TYPICAL MULTIPLE CLEANOUT DETAIL

SCALE: AS DIMENSIONED

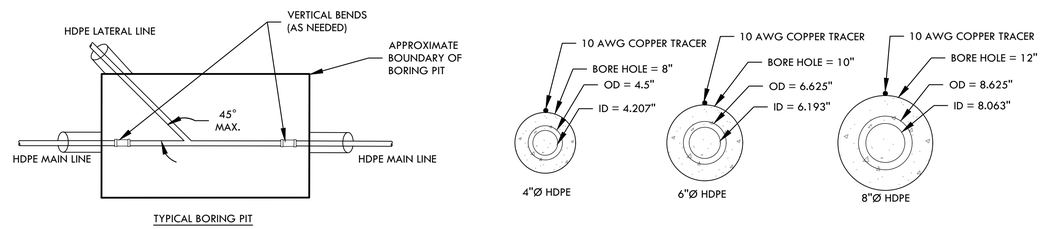

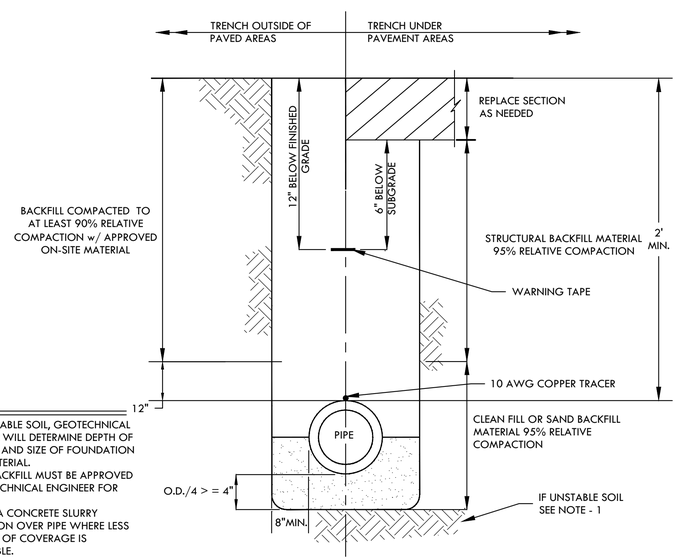

NOTEs:

1. FOR UNSTABLE SOIL, GEOTECHNICAL ENGINEER WILL DETERMINE DEPTH OF REMOVAL AND SIZE OF FOUNDATION REFILL MATERIAL.
2. NATIVE BACKFILL MUST BE APPROVED BY GEOTECHNICAL ENGINEER FOR REUSE.
3. PROVIDE A CONCRETE SLURRY PROTECTION OVER PIPE WHERE LESS THAN 30" OF COVERAGE IS OBTAINABLE.

3 TYPICAL TRENCH DETAIL FOR SEWER PIPE

SCALE: AS DIMENSIONED

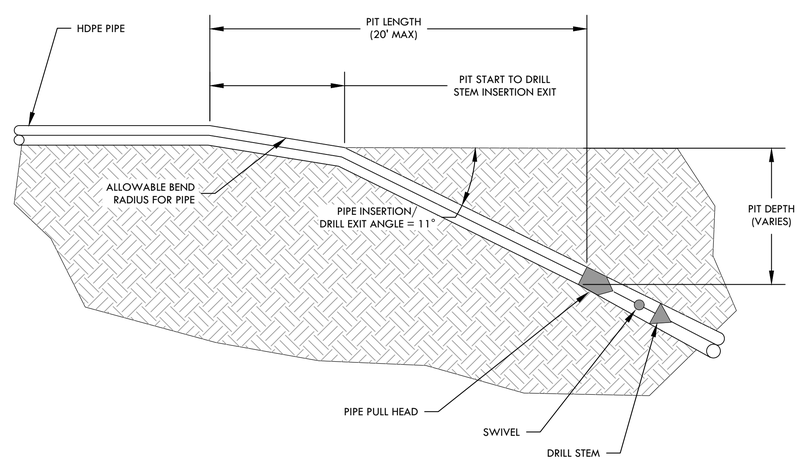

NOTES:

1. THE ACTUAL PIT DIMENSIONS TO BE DETERMINED BY CONTRACTOR.
2. PIT SHALL BE CONTRUCTED TO MINIMIZE DISTURBANCE TO THE SURROUNDING AREA. PIT DEPTHS ARE DEPENDANT ON RIM AND INVERT ELEVATIONS LISTED AT EACH PIT.
3. ALL EXCAVATIONS NEAR TREES SHALL NOT BE CLOSER THAN 3 TIMES THE DIAMETER OF THE TREE MEASURED FROM THE TOP OF SOIL (NOT DUFF), 4' DISTANCE FROM THE TRUNK OR FURTHER OUT FROM THE TREE TO CLEAR THE CROWN OF THE TREE TRUNK. REFER TO DIVISION 31 13 11 OF THE CONSTRUCTION CONTRACT DOCUMENTS FOR FURTHER INFORMATION ON TREE PROTECTION.
4. PIT BACKFILL MATERIALS SHALL BE CLEAN, FREE OF ROOTS, AND APPROVED BY GEOTECHNICAL ENGINEER FOR USE. REFER TO DETAIL 2 FOR COMPACTION REQUIREMENTS.
5. A 10 AWG COPPER TRACER WIRE SHALL BE PLACED ON THE TOP OF ALL HDPE SEWER PIPE THAT IS INSTALLED USING HDD.

4 HORIZONTAL DIRECTIONAL DRILLING DETAILS

SCALE: NTS

22"x34" SHEET. IF SHEET SIZE IS SMALLER, DRAWING HAS BEEN REDUCED.

SHEET TITLE:
DETAILS

CLIENT:
SAN MATEO COUNTY PARKS
ATTN: MARIO NASTARI
4555 COUNTY CENTER, 4TH FLOOR
REDWOOD CITY, CA 94063
TEL: (650) 363-4020

PROJECT TITLE:
WASTEWATER SYSTEM IMPROVEMENTS
MEMORIAL PARK, 9500 PESCADERO CREEK RD
LOMA MAR, CA 94021

SHERWOOD DESIGN ENGINEERS
1525 Seabright Ave
Santa Cruz, CA 95062
www.sherwoodengineers.com

REGISTERED PROFESSIONAL ENGINEER
PETER H. HALL
NO. 055605
EXP. 12/31/20
CIVIL
STATE OF CALIFORNIA

DRAWN BY:	JRS
CHECKED BY:	CJC/PHH
DATE:	SEPTEMBER 1, 2020
JOB NO:	19-268
SCALE:	AS SHOWN
SHEET:	WW3.0

SAN MATEO COUNTY DEPARTMENT
OF
PUBLIC WORKS
REDWOOD CITY
CALIFORNIA

DRAWN BY: M.L.
CHECK BY: R.O.
APPROVED BY: N.R.C.

SCALE: NONE
DATE: 6/95
REVISED:

GENERAL NOTE:

FRAME AND COVER SHALL MEET OR EXCEED THE REQUIREMENTS OF AASHTO H-20 LOADING.

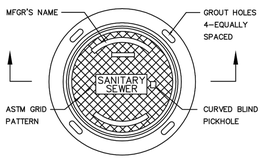

* ALL MATERIALS USED SHALL CONFORM TO ASTM SPEC. A-159-70T-G3000 OR U.S. GOV'T SPEC. QQ1-653

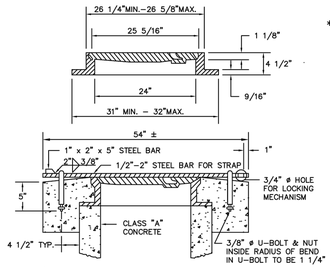

* MANHOLE STRAP TO BE USED IN OFF ROAD AREA WHERE SPECIFIED BY THE ENGINEER

* U-BOLTS, NUT & STRAP SHALL BE HOT DIP GALVANIZED AFTER FABRICATION

SECTION

SANITARY SEWER MANHOLE COVER, FRAME AND STRAP DETAIL

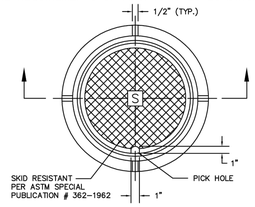

* ALL MATERIALS USED SHALL CONFORM TO ASTM SPEC. A-159-64T-G3000 OR U.S. GOV'T SPEC. QQ1-653

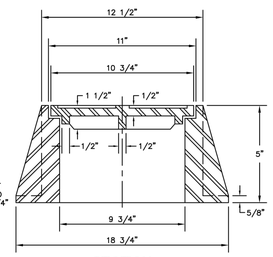

SECTION

SANITARY SEWER FLUSHING INLET COVER

SAN MATEO COUNTY DEPARTMENT
OF
PUBLIC WORKS
REDWOOD CITY
CALIFORNIA

DRAWN BY: D.P.
CHECK BY: R.O.
APPROVED BY: N.R.C.

SCALE: NONE
DATE: 6/95
REVISED: 7/97

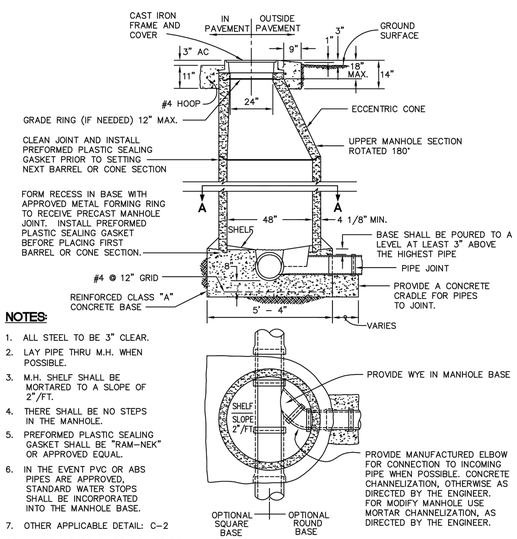

NOTES:

1. ALL STEEL TO BE 3" CLEAR.
2. LAY PIPE THRU M.H. WHEN POSSIBLE.
3. M.H. SHELF SHALL BE MORTARED TO A SLOPE OF 2"/FT.
4. THERE SHALL BE NO STEPS IN THE MANHOLE.
5. PREFORMED PLASTIC SEALING GASKET SHALL BE "RAM-NEK" OR APPROVED EQUAL.
6. IN THE EVENT PVC OR ABS PIPES ARE APPROVED, STANDARD WATER STOPS SHALL BE INCORPORATED INTO THE MANHOLE BASE.
7. OTHER APPLICABLE DETAIL: C-2
8. MANHOLE THROAT LOCATION TO BE OPPOSITE THE LARGEST SHELF AREA OR AS DIRECTED BY THE ENGINEER

SECTION A-A

SANITARY SEWER MANHOLE DETAIL

1 STANDARD MANHOLE
SCALE: AS DIMENSIONED

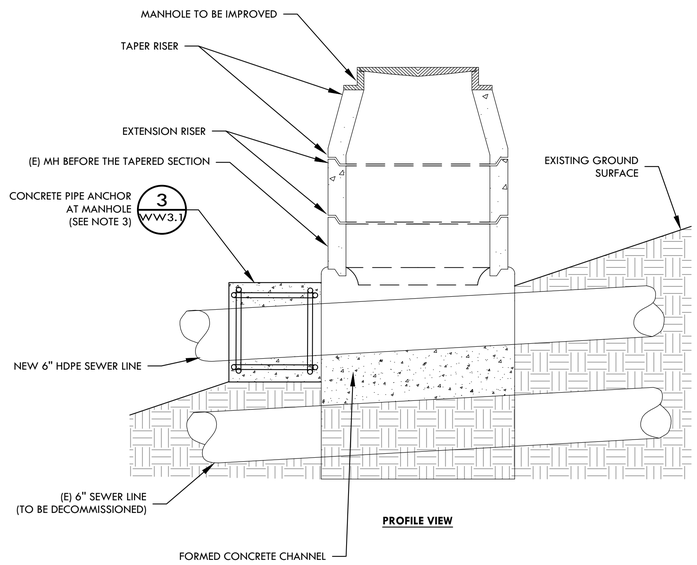

PROFILE VIEW

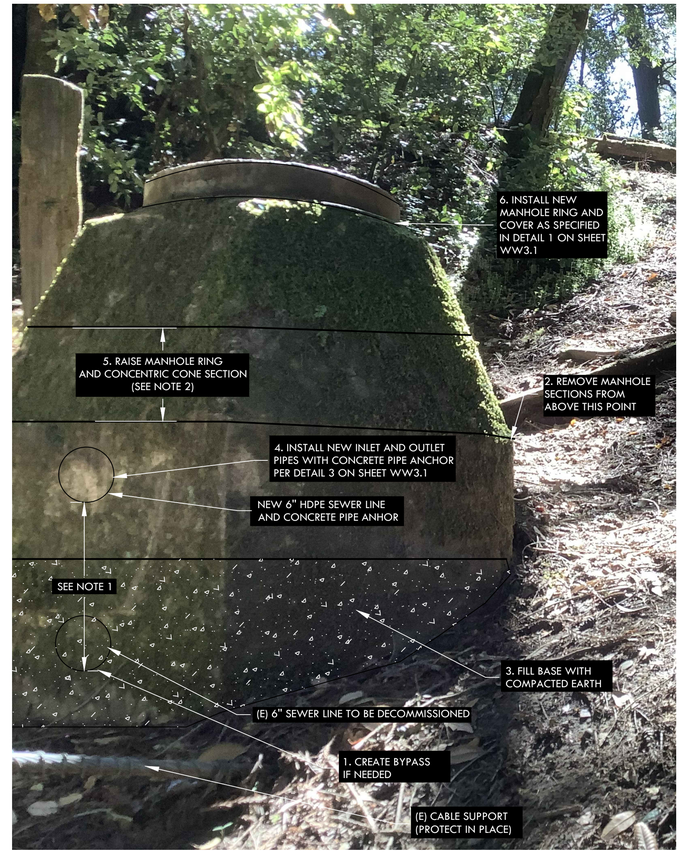

2 MANHOLE IMPROVEMENT PLAN (MH-A2 AND MH-B1)
SCALE: AS SHOWN

NOTES:

1. PIPES ARE DRAWN FOR VISUAL REFERENCE ONLY. REFER TO DETAIL 1 ON SHEET WW2.3 FOR NEW PIPE INVERT ELEVATIONS. THE UPSTREAM PIPE INVERT WILL BE RAISED BY 2.37', AND THE DOWNSTREAM PIPE INVERT WILL BE RAISED BY 1.7'. THE EXISTING PIPE SHALL BE DECOMMISSIONED AND THE BASE OF THE MANHOLE SHALL BE FILLED WITH COMPACTED EARTH UP TO ABOVE THE EXISTING PIPE AND BELOW THE NEW HDPE PIPE.
2. THE EXISTING MANHOLE RINGS AND BEGINNING OF THE TAPERED SECTION SHALL BE RAISED 2'. ENSURE THAT THE MANHOLE IS TAPERED UP TO THE MANHOLE RING.
3. THE SCENARIO SHOWN IN DETAIL 2 AND 3 IS REPRESENTATIVE OF THE UPSTREAM MANHOLE. THE ONLY DIFFERENCE WITH THE DOWNSTREAM MANHOLE IS THAT THE ORIENTATION IS FLIPPED, WITH THE CONCRETE PIPE ANCHOR ON THE INLET OF THE MANHOLE AND THE PIPES SLOPING IN THE OPPOSITE DIRECTION.

NOTES:

1. TAMPERPROOF AND WATERPROOF COVERS ARE REQUIRED ON ALL MANHOLES.

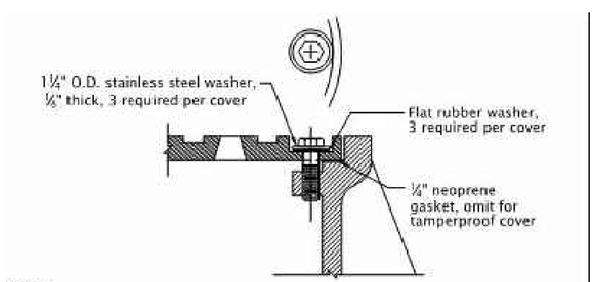

NOTE:
3 reqd., equally spaced, ½" x 1½" pentagonal or hexagonal head, bronze or stainless steel. Install frame so that one bolt boss is located over the manhole ladder.

BOLT-DOWN DETAIL
(FOR TAMPERPROOF AND WATERTIGHT)

NOTES:

1. THE EXCAVATION AT THE BASE OF THE MANHOLE OF THE CONCRETRE CONNECTION SHALL NOT EXCEED 1.5'.

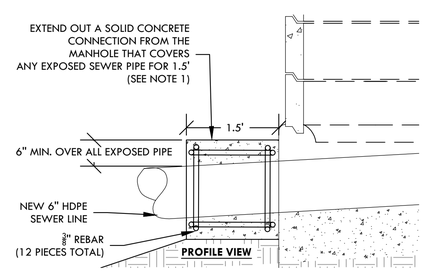

PROFILE VIEW

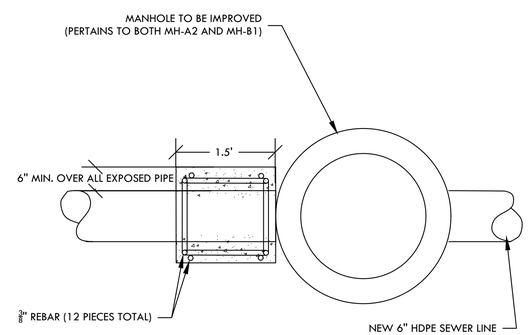

PLAN VIEW

3 CONCRETE PIPE ANCHOR AT MANHOLE
SCALE: AS SHOWN

SHEET TITLE:
DETAILS - CONTINUED

CLIENT:
SAN MATEO COUNTY PARKS
ATTN: MARIO NASTARI
4555 COUNTY CENTER, 4TH FLOOR
REDWOOD CITY, CA 94063
TEL: (650) 363-4020

PROJECT TITLE:
WASTEWATER SYSTEM IMPROVEMENTS
MEMORIAL PARK, 9300 PESCADERO CREEK RD
LOMA MAR, CA 94021

SHERWOOD DESIGN ENGINEERS
1525 Seabright Ave
Santa Cruz, CA 95062
www.sherwoodengineers.com

REGISTERED PROFESSIONAL ENGINEER PETER H. HARRIS NO. 055605 EXP. 12/31/20 CIVIL STATE OF CALIFORNIA

DRAWN BY:	JRS
CHECKED BY:	CJC/PHH
DATE:	SEPTEMBER 1, 2020
JOB NO:	19-268
SCALE:	AS SHOWN
SHEET:	WW3.1

22"x34" SHEET. IF SHEET SIZE IS SMALLER, DRAWING HAS BEEN REDUCED.

GENERAL SPECIFICATIONS

REFER TO THE DIVISION 0 AND DIVISION 1 SPECIFICATIONS IN THE CONSTRUCTION CONTRACT DOCUMENTS FOR THE MEMORIAL PARK COLLECTION SYSTEM REPLACEMENT PROJECT FOR ALL PROJECT GENERAL REQUIREMENTS. ALL WORK SHALL BE IN ACCORDANCE WITH STATE OF CALIFORNIA DEPARTMENT OF TRANSPORTATION STANDARD SPECIFICATIONS DATED 2018 EXCEPT AS SUPPLEMENTED OR MODIFIED BY THE PROJECT SPECIAL PROVISIONS.

MATERIAL SPECIFICATIONS

THE ACCOMPANIED PLANS PRESENT THE GENERAL LAYOUT, PLUMBING CONFIGURATION, AND CONSTRUCTION DETAILS FOR THE WASTEWATER SYSTEM IMPROVEMENTS PROJECT FOR THE WASTEWATER COLLECTION SYSTEM AT MEMORIAL PARK. THE FOLLOWING ARE MATERIAL SPECIFICATIONS FOR THE SYSTEM COMPONENTS. ALL MATERIALS USED FOR THE CONSTRUCTION OF THIS PROJECT SHALL CONFORM TO THE FOLLOWING SPECIFICATIONS AND AS DESCRIBED IN THE ACCOMPANIED PLANS.

1. PIPING AND FITTINGS

THE TYPE OF PIPE MATERIALS AND FITTINGS SHALL BE AS DESIGNATED ON THE PLANS AND SHALL COMPLY WITH THE FOLLOWING:

1.1. GRAVITY PIPE. ALL WASTEWATER PIPES SHALL HAVE THE FOLLOWING CHARACTERISTIC. HDPE PIPE AND FITTINGS SHALL BE MANUFACTURED IN ACCORDANCE WITH THE REQUIREMENTS OF ASTM F714 LATEST EDITION. HDPE PIPE SHALL BE MADE FROM A COMPOUND MEETING THE REQUIREMENTS OF CELL CLASSIFICATION 345464C, D OR E, AS SPECIFIED IN ASTM SPECIFICATION D3350. ALL 4" AND 6" PIPE SHALL BE HDPE AND RATED AT 125 PSI, SUCH AS DR-17 HIGH DENSITY POLYETHYLENE (HDPE) TYPE 3408/3608 PER ASTM D3035 AND AWWA C901. ALL 8" PIPE SHALL BE HDPE AND RATED AT 250 PSI, SUCH AS DR-9 HIGH DENSITY POLYETHYLENE (HDPE) TYPE 3408/3608 PER ASTM D3035 AND AWWA C901. THE EXPOSED PIPE THAT CROSSES THE BRIDGE (PIPE SEGMENT 1B) SHALL CONTAIN A MINIMUM OF 2% OF FINELY DIVIDED AND EVENLY DISPERSED CARBON BLACK FOR UV STABILIZATION. FOR MORE INFORMATION ON PIPE SUPPORT SPECIFICATIONS ACROSS THE BRIDGE, SEE THE STRUCTURAL PLANS (SHEETS S1-S3). ALL HDPE FITTINGS AND TRANSITIONS SHALL MEET ASTM D3261. ALL HDPE PIPE AND FITTINGS SHALL HAVE A HYDROSTATIC DESIGN BASIS (HDB) OF AT LEAST 1,600 PSI. PIPE SHALL BE FROM A SINGLE MANUFACTURER WHO IS FULLY EXPERIENCED, REPUTABLE, AND QUALIFIED IN THE MANUFACTURE OF THE HDPE PIPE TO BE FURNISHED SUCH AS JM EAGLE. ALL CONNECTIONS TO GRAVITY PIPE SHALL BE WITH A SANITARY WYE.

2. VALVES AND APPURTENANCES

2.1. MANHOLES

2.1.1. STANDARD PRECAST CONCRETE MANHOLES:

2.1.1.1. DESCRIPTION: ASTM C 478, PRECAST, REINFORCED CONCRETE, OF DEPTH INDICATED, WITH PROVISION FOR SEALANT JOINTS. ALL MANHOLES SHALL BE CLASS 2 CONCRETE AND SHALL CONFORM IN SIZE, SHAPE AND DETAILS TO THOSE SHOWN ON THE PLANS. PIPE OPENINGS SHALL BE BUILT INTO THE MANHOLES AS SHOWN.

2.1.1.2. DIAMETER: 48 INCHES MINIMUM UNLESS OTHERWISE INDICATED.

2.1.1.3. BALLAST: INCREASE THICKNESS OF PRECAST CONCRETE SECTIONS OR ADD CONCRETE TO BASE SECTION, AS REQUIRED TO PREVENT FLOTATION.

2.1.1.4. BASE SECTION: 6-INCH MINIMUM THICKNESS FOR FLOOR SLAB AND 4-INCH MINIMUM THICKNESS FOR WALLS AND BASE RISER SECTION; WITH SEPARATE BASE SLAB OR BASE SECTION WITH INTEGRAL FLOOR.

2.1.1.5. RISER SECTIONS: 4-INCH MINIMUM THICKNESS, OF LENGTH TO PROVIDE DEPTH INDICATED.

2.1.1.6. TOP SECTION: ECCENTRIC-CONE TYPE UNLESS CONCENTRIC-CONE OR FLAT-SLAB-TOP TYPE IS INDICATED; WITH TOP OF CONE OF SIZE THAT MATCHES GRADE RINGS.

2.1.1.7. JOINT SEALANT: ASTM C 990, BITUMEN OR BUTYL RUBBER.

2.1.1.8. OPENING SEALANT: THE OUTER ENDS OF ALL OPENINGS SHALL BE SEALED WITH A PRECAST CONCRETE PLUG MADE WATERTIGHT WITH MASTIC COMPOUND OR ELASTOMETRIC GASKET.

2.1.1.9. RESILIENT PIPE CONNECTORS: ASTM C 923, CAST OR FITTED INTO MANHOLE WALLS, FOR EACH PIPE CONNECTION.

2.1.1.10. STEPS: STEEL BARS FOR STEPS OR LADDERS REQUIRED FOR MANHOLES SHALL BE FABRICATED FROM STEEL CONFORMING TO SPECIFICATIONS IN ASTM DESIGNATION: A36 OR A575, GRADE 1020.

2.1.1.11. ADJUSTING RINGS: INTERLOCKING HDPE RINGS, WITH LEVEL OR SLOPED EDGE IN THICKNESS AND DIAMETER MATCHING MANHOLE FRAME AND COVER, AND WITH HEIGHT AS REQUIRED TO ADJUST MANHOLE FRAME AND COVER TO INDICATED ELEVATION AND SLOPE. INCLUDE SEALANT RECOMMENDED BY RING MANUFACTURER.

2.1.1.12. GRADE RINGS: REINFORCED-CONCRETE RINGS, 6- TO 9-INCH TOTAL THICKNESS, WITH DIAMETER MATCHING MANHOLE FRAME AND COVER, AND WITH HEIGHT AS REQUIRED TO ADJUST MANHOLE FRAME AND COVER TO INDICATED ELEVATION AND SLOPE.

2.1.2. MANHOLE FRAMES AND COVERS:

2.1.2.1. DESCRIPTION: FERROUS; 24-INCH ID BY 7- TO 9-INCH RISER, WITH 4-INCH- MINIMUM-WIDTH FLANGE AND 26-INCH- DIAMETER COVER. INCLUDE INDENTED TOP DESIGN WITH LETTERING CAST INTO COVER, USING WORDING EQUIVALENT TO "SANITARY SEWER." NEW MANHOLE FRAMES AND COVERS SHALL NOT BE ADJUSTED TO FINAL GRADE UNTIL ADJACENT SURFACING HAS BEEN COMPLETED.

2.1.2.2. ENSURE MANHOLE COVER IS WATERPROOF AND TAMPERPROOF WITH A PRESSURE TIGHT COVER. SEE DETAIL 1 ON SHEET WW3.1 FOR MORE INFORMATION ON A BOLT DOWN DETAIL.

2.1.2.3. MATERIAL: ASTM A 536, GRADE 60-40-18 DUCTILE OR ASTM A 48/A 48M, CLASS 35 GRAY IRON UNLESS OTHERWISE INDICATED.

2.1.3. MANHOLE COVER INSERTS: MANUFACTURED, PLASTIC FORM, OF SIZE TO FIT BETWEEN MANHOLE FRAME AND COVER AND DESIGNED TO PREVENT STORMWATER INFLOW. INCLUDE HANDLE FOR REMOVAL AND GASKET FOR GASTIGHT SEALING.

2.2. CLEANOUTS: ASME A112.36.2M, ROUND HOUSING WITH CLAMPING DEVICE AND ROUND, SECURED, SCORIATED COVER. INCLUDE INSIDE CAULK OR SPIGOT CONNECTION AND COUNTERSUNK, TAPERED-THREAD, BRASS CLOSURE PLUG.

2.2.1. TOP-LOADING CLASSIFICATION(S): LIGHT DUTY AND HEAVY DUTY.

2.2.2. SEWER PIPE FITTING AND RISER TO CLEANOUT: ASTM A 74, SERVICE CLASS, CAST-IRON SOIL PIPE AND FITTINGS.

3. CONCRETE AND FORMS

3.1. FOR ANY CAST IN PLACE CONCRETE, PROVIDE A STANDARD BRAND OF PORTLAND CEMENT, ASTM C150, TYPE I OR II. PROVIDE HARDROCK AGGREGATE, ASTM C33, WITH ADDITIONAL ATTRIBUTES AS SPECIFIED HEREIN.

3.2. AGGREGATES: PROVIDE HARDROCK AGGREGATE, ASTM C33, WITH ADDITIONAL ATTRIBUTES AS SPECIFIED HEREIN.

3.2.1. FINE AGGREGATE: PROVIDE WASHED NATURAL SAND HAVING STRONG, HARD DURABLE PARTICLES, AND CONTAINING NOT MORE THAN 2 PERCENT BY WEIGHT OF DELETERIOUS MATTER SUCH AS CLAY LUMPS, MICA, SHALE OR SCHIST. GRADE FROM COARSE TO FINE.

3.2.2. COARSE AGGREGATE: PROVIDE COARSE AGGREGATE CONSISTING OF CLEAN, HARD, FINE-GRAINED, SOUND CRUSHED ROCK OR WASHED GRAVEL, OR A COMBINATION OF BOTH, CONTAINING NOT MORE THAN 5% BY WEIGHT OF FLAT, CHIP-LIKE, THIN, ELONGATED, FRIABLE OR LAMINATED PIECES, NOR MORE THAN 2% BY WEIGHT OF SHALE OR CHERTY MATERIAL. USE COARSE AGGREGATE OF THE LARGEST PRACTIBLE SIZE FOR EACH CONDITION OF PLACEMENT.

3.3. STEEL: REFER TO STRUCTURAL SHEETS FOR STEEL SPECIFICATIONS.

3.4. FORM TIES AND SPREADERS: SNAP-OFF TYPE, GALVANIZED METAL, FIXED LENGTH, CONE TYPE, WITH WATERPROOFING WASHER AND LEAVING NO METAL WITHIN 1 INCH OF THE CONCRETE FACE.

3.5. FORM RELEASE AGENT: COLORLESS MINERAL OIL WHICH WILL NOT STAIN CONCRETE, OR ABSORB MOISTURE, OR IMPAIR NATURAL BONDING OR COLOR CHARACTERISTICS OF COATING INTENDED FOR USE ON CONCRETE. DIESEL OR OIL BASED RELEASE AGENTS SHALL NOT BE USED.

3.6. CONCRETE REINFORCEMENT. THIS SECTION SPECIFIES REINFORCING BARS AND WELDED WIRE FABRIC

3.6.1. REINFORCEMENT STEEL: BAR REINFORCEMENT - ASTM A615 GRADE

3.6.2. REINFORCING FABRIC: WELDED WIRE FABRIC - ASTM A185.

4. OTHER ITEMS: ANY OTHER ITEMS, MATERIALS OR PROCEDURES NOT NOTED OR INCLUDED IN THE ENGINEERING PLANS SHALL BE APPROVED BY THE PROJECT ENGINEER PRIOR TO IMPLEMENTATION. ALL SUBMITTAL INFORMATION SHALL BE PRESENTED TO THE ENGINEER FOR APPROVAL PRIOR TO CONSTRUCTION.

22"X34" SHEET. IF SHEET SIZE IS SMALLER, DRAWING HAS BEEN REDUCED.

SHEET TITLE:
GENERAL AND MATERIAL SPECIFICATIONS

CLIENT:
SAN MATEO COUNTY PARKS
ATTN: MARIO NASTARI
4555 COUNTY CENTER, 4TH FLOOR
REDWOOD CITY, CA 94063
TEL: (650) 363-4020

PROJECT TITLE:
WASTEWATER SYSTEM IMPROVEMENTS
MEMORIAL PARK, 9500 PESCADERO CREEK RD
LOMA MAR, CA 94021

SHERWOOD DESIGN ENGINEERS
1525 Seabright Ave
Santa Cruz, CA 95062
www.sherwoodengineers.com

REGISTERED PROFESSIONAL ENGINEER
PETER H. HARRIS
NO. 055605
EXP. 12/31/20
CIVIL
STATE OF CALIFORNIA

DRAWN BY:	JRS
CHECKED BY:	CJC/PHH
DATE:	SEPTEMBER 1, 2020
JOB NO:	19-268
SCALE:	AS SHOWN
SHEET:	WW4.0

CONSTRUCTION SPECIFICATIONS

THE CONSTRUCTION OF THE SYSTEM SHALL CONFORM TO THE PLANS AND FOLLOWING SPECIFICATIONS.

1. STAKING

THE CONTRACTOR IS RESPONSIBLE FOR PERFORMING SUPPLEMENTAL SURVEYS PRIOR TO CONSTRUCTION THAT ESTABLISHES INVERTS AT LOCATIONS WHERE EXISTING SURVEY INFORMATION IS INSUFFICIENT. MUCH OF THE RIM, GROUND SURFACE, AND INVERT INFORMATION SHOWN IS APPROXIMATED USING LIDAR DATA.

THE CONTRACTOR WILL PROVIDE SUFFICIENT HORIZONTAL AND VERTICAL CONTROL FOR INSTALLATION OF THE WORK AT DATUM POINTS NECESSARY TO ESTABLISH ALIGNMENT AND GRADE. THE PROTECTION AND CARE OF THE STAKES ONCE SET, SHALL BE THE RESPONSIBILITY OF THE CONTRACTOR.

2. EXCAVATION

ALL EXCAVATION WORK TO INSTALL THE WASTEWATER COLLECTION SYSTEM SHALL BE MADE TO THE LINES, GRADES AND DIMENSIONS SHOWN IN THE ACCOMPANIED PLANS. EXCAVATIONS SHALL BE PERFORMED IN THE DAY AND IN A MANNER THAT MINIMIZES EROSION, FLOODING AND SEDIMENTATION. EXCAVATED SOILS THAT ARE TO BE STOCKPILED ON-SITE SHALL BE PLACED IN A LOCATION AND MANNER THAT MINIMIZES EROSION AND CONTROLS SEDIMENTATION.

THE CONTRACTOR SHALL TAKE EXTRA PRECAUTION WHERE EXCAVATION EQUIPMENT MAY ENCOUNTER EXISTING UNDERGROUND UTILITIES AND OTHER FACILITIES OF ANY NATURE. CONTRACTOR SHALL PERSON HIS OPERATION IN SUCH A MANNER AND SHALL EXERCISE THE GREATEST OF CARE SO AS NOT TO INJURE IN ANY MANNER EXISTING UNDERGROUND UTILITIES, MAINS OR FACILITIES OF ANY NATURE. SHOULD THE CONTRACTOR INJURE, BREAK OR DAMAGE EXISTING UNDERGROUND UTILITIES, MAINS, OR FACILITIES OF ANY NATURE IN ANY MANNER, THEY SHALL REPAIR THE SAME AT THEIR OWN EXPENSE. IF IT DOES NOT APPEAR FEASIBLE THAT THE CONTRACTOR CAN MAKE NEEDED REPAIRS, THEN SUCH REPAIRS SHALL BE MADE BY THE OWNER AND THE CONTRACTOR SHALL BE CHARGED FOR SUCH REPAIRS.

3. UNNECESSARY GRADING AND DISTURBING OF SOIL SHALL BE AVOIDED.

DURING WORK, SOIL SHALL BE PROTECTED FROM EROSION AT ALL TIMES. COVERING OR INSTALLING FILTER BERMS OR OTHER MEANS SHALL BE EMPLOYED TO PREVENT SEDIMENT FROM LEAVING THE SITE OR ENTERING ANY WATERCOURSE.

DURING CONSTRUCTION, NO TURBID WATER SHALL BE PERMITTED TO ENTER ANY NEARBY RIVERS. USE OF SILT AND GREASE TRAPS, FILTER BERMS, OR OTHER MEASURES SHALL BE USED TO PREVENT SUCH DISCHARGE.

ALL EXCAVATED MATERIAL SHALL BE REMOVED TO AN APPROVED DISPOSAL SITE.

ANY MATERIAL STOCKPILED ON-SITE SHALL BE COVERED WITH PLASTIC, ESPECIALLY DURING THE WINTER MONTHS OR DURING PERIODS OF RAIN.

IT IS THE CONTRACTOR'S RESPONSIBILITY TO SEE THAT ADDITIONAL MEASURES, NECESSARY TO CONTROL SITE EROSION AND PREVENT SEDIMENT TRANSPORT OFF-SITE ARE IMPLEMENTED.

4. POLLUTION CONTROL

4.1. NOISE POLLUTION: IT SHALL BE THE CONTRACTOR'S RESPONSIBILITY TO KEEP NOISE POLLUTION, DUE TO THESE CONSTRUCTION ACTIVITIES, AS LOW AS POSSIBLE.

4.2. SOIL CONTAMINATION: THE CONTRACTOR SHALL NOT ALLOW REGULATED MATERIALS TO SPILL ON THE PROJECT SITE. ANY SPILLAGE OR REGULATED MATERIALS RESULTING FROM THE CONTRACTOR'S OPERATION SHALL BE REMOVED IMMEDIATELY BY THE CONTRACTOR AT THE CONTRACTOR'S EXPENSE.

4.3. STORAGE OF REGULATED MATERIALS: THE STORAGE AND USE OF ANY REGULATED MATERIALS SHALL MEET ALL REQUIREMENTS OF LOCAL, STATE, AND FEDERAL REGULATORY AGENCIES. IT SHALL BE THE CONTRACTOR'S RESPONSIBILITY TO SATISFY THE REQUIREMENTS OF ANY REGULATORY AGENCY FOR THE STORAGE, MONITORING, USAGE, TRANSPORTATION, SAFETY, REPORTING, OR ANY OTHER REQUIREMENTS REGARDING THE MANAGEMENT OF REGULATED MATERIALS ON AND OFF THE PROJECT SITE.

5. SITE WORK

5.1. MOBILIZATION: THE CONTRACTOR SHALL BE RESPONSIBLE FOR ALL PREPARATORY WORK AND PLACEMENT OF MATERIALS IN A STAGING AREA REQUIRED FOR CONSTRUCTION OPERATIONS INCLUDING, BUT NOT LIMITED TO, THOSE NECESSARY FOR THE MOVEMENT OF PERSONNEL, EQUIPMENT, SUPPLIES, AND INCIDENTALS TO THE PROJECT SITE; FOR THE ESTABLISHMENT OF FACILITIES NECESSARY FOR WORK ON THE PROJECT; PROVIDING POLLUTION CONTROL MEASURES; AND FOR ALL OTHER WORK AND OPERATIONS WHICH MUST BE PERFORMED. THE CONTRACTOR SHALL PROVIDE MATERIALS, NOT SPECIFICALLY DESCRIBED BUT REQUIRED FOR PROPER COMPLETION OF THE WORK OF THIS SECTION, AS SELECTED BY THE CONTRACTOR SUBJECT TO THE APPROVAL OF THE COUNTY.

5.2. CLEARING AND GRUBBING: CLEAR THE SITE AS SHOWN ON THE DRAWINGS AND AS SPECIFIED IN THIS SECTION. CLEARING AND GRUBBING SHALL CONSIST OF ALL WORK INCLUDING, BUT NOT LIMITED TO, PROVIDING AND INSTALLING TEMPORARY EROSION CONTROL, AND PLACEMENT OF TREES, TREE BRANCHES, TREE STUMPS, BRUSH, ROOTS, BOULDERS, SHRUBS, SEDIMENT, AND ALL OBJECTIONABLE MATERIALS IN AN AGREED UPON LOCATION ADJACENT TO THE WORK SITE.

5.2.1. EXAMINE THE AREAS AND CONDITIONS UNDER WHICH THE WORK OF THIS SECTION WILL BE PERFORMED. CORRECT CONDITIONS DETRIMENTAL TO TIMELY AND PROPER COMPLETION OF THE WORK. DO NOT PROCEED UNTIL UNSATISFACTORY CONDITIONS ARE CORRECTED.

5.2.2. REFERENCE DIVISION 31 13 11 OF THE CONSTRUCTION CONTRACT DOCUMENTS FOR TREE PROTECTION SPECIFICATIONS.

5.2.3. ALL WASTES DISPOSAL SHALL BE CONDUCTED AS FOLLOWS:

A. REMOVE WASTE FROM CLEARING OPERATIONS.
B. DISPOSE OF WASTE AWAY FROM THE SITE IN A LEGAL MANNER.
C. DO NOT STORE OR PERMIT DEBRIS TO ACCUMULATE ON THE JOB SITE.
D. DO NOT BURN DEBRIS AT THE SITE.

6. HORIZONTAL DIRECTIONAL DRILLING

SECTIONS OF THE GRAVITY SEWER LINE SHALL BE INSTALLED USING HORIZONTAL DIRECTIONAL DRILLING. THE DIRECTIONAL DRILLING MACHINE SHALL BE APPROPRIATE FOR THE SPECIFIC PIPING/CONDUIT SIZE AND SITE CONDITIONS. DRILLING FLUID CAN BE COMPOSED OF BENTONITE CLAY OR OTHER APPROVED STABILIZING AGENT, POTABLE WATER AND ENVIRONMENTALLY SAFE ADDITIVES (DIESEL FUEL, WASTE OIL OR ENVIRONMENTALLY NON-COMPATILBE POLYMERS ARE NOT PERMITTED). CONTRACTOR SHALL CONTINUOUSLY MONITOR CONDITION OF DRILLING FLUIDS IN THE DRILLING PITS TO MAKE SURE NO FRAC-OUT OCCURS. IF A FRAC-OUT OCCURS DURING DRILLING, CONTRACTOR SHALL IMMEDIATELY STOP DRILLING OPERATIONS AND IMPLEMENT PROVISIONS FOR FRAC-OUT CONTINGENCY. TO MINIMIZE THE POTENTIAL FOR A FRAC-OUT, THE CONTINGENCY PLAN SHALL INCLUDE, BUT NOT BE LIMITED TO:

- BARRIERS (STRAW BALES OR SEDIMENTATION FENCES) SHALL BE ERECTED BETWEEN THE BORE SITE AND NEARBY SENSITIVE RESOURCES PRIOR TO DRILLING, AS APPROPRIATE, TO PREVENT RELEASED MATERIAL FROM REACHING SENSITIVE RESOURCES.
- N-SITE BRIEFINGS SHALL BE CONDUCTED FOR THE WORKERS TO IDENTIFY AND LOCATE SENSITIVE RESOURCES AT THE SITE.
- ENSURE THAT ALL FIELD PERSONNEL UNDERSTAND THEIR RESPONSIBILITY FOR TIMELY REPORTING OF FRAC-OUTS.
- NECESSARY RESPONSE EQUIPMENT SHALL BE MAINTAINED ON-SITE OR AT A READILY ACCESSIBLE LOCATION AND IN GOOD WORKING ORDER.
- IF A FRAC-OUT OCCURS, THE AREA SHALL BE ISOLATED WITH HAY BALES, SAND BAGS, OR SILT FENCING TO SURROUND AND CONTAIN THE DRILLING MUD. THE DRILLING MUD SHALL BE COLLECTED BY A MOBILE VACUUM TRUCK AND RECYCLED IN THE RETURN PIT. ONCE EXCESS DRILLING MUD IS REMOVED, THE AREA SHALL BE SEEDED AND/OR REPLANTED USING SPECIES SIMILAR TO THOSE IN THE ADJACENT AREA, OR ALLOWED TO RE-GROW FROM EXISTING VEGETATION.
- ALL CLEANUP AND POST-CLEANUP ACTIVITIES SHALL BE DOCUMENTED WITH PHOTOGRAPHS AND A FRAC-OUT INCIDENT REPORT SHALL BE PREPARED, DESCRIBING TIME, PLACE, ACTIONS TAKEN TO REMEDIATE FRAC-OUT AND MEASURES IMPLEMENTED TO PREVENT RECURRENCE. THIS INCIDENT REPORT SHALL BE PROVIDED TO STATE REPRESENTATIVE NOT MORE THAN 30 DAYS AFTER THE INCIDENT.

IF AN OBSTRUCTION IS ENCOUNTERED DURING BORING WHICH PREVENTS COMPLETION OF THE INSTALLATION IN ACCORDANCE WITH THE DESIGN LOCATION, THE CONTRACTOR SHALL FILL ALL VOIDS WITH EXCAVATABLE FLOWABLE FILL AND SUBMIT A NEW INSTALLATION PROCEDURE AND REVISED PLAN.

FOR NON-CONDUCTIVE INSTALLATIONS, PROVIDE CONTINUOUS CONDUCTIVE TRACKING MATERIALS EITHER EXTERNALLY, INTERNALLY OR INTEGRAL WITH THE PRODUCT. USE A 10 AWG COPPER TRACER WIRE OR APPROVED EQUIVALENT OVER THE FULL LENGTH OF THE PIPE.

ANGLE ENTRY HOLE SO THAT CURVATURE OF PILOT HOLE DOES NOT EXCEED ALLOWABLE BENDING RADIUS OF PRODUCT. IF WATER IS ENCOUNTERED, PROVIDE AND MAINTAIN A DEWATERING SYSTEM OF SUFFICIENT CAPACITY TO KEEP EXCAVATION FREE OF WATER UNTIL OPERATION IS COMPLETE.

CONTAIN EXCESS DRILLING FLUIDS AT ENTRY AND EXIT POINTS UNTIL THEY ARE RECYCLED, REMOVED FROM THE SITE OR VACUUMED DURING DRILLING OPERATIONS. ENSURE THAT ENTRY AND EXIT PITS ARE OF SUFFICIENT SIZE TO CONTAIN THE EXPECTED RETURN OF DRILLING FLUIDS AND SOIL CUTTINGS. DISPOSE OF RESIDUAL DRILLING FLUIDS AND OTHER WASTE PRODUCTS IN A LEGAL MANNER OFF STATE PROPERTY.

INSTALL A PRODUCT INTO A BORE HOLE THE SAME DAY THAT THE PRE-BORE IS COMPLETED.

IF CONTAMINATED SOIL IS ENCOUNTERED, CEASE DRILLING AND NOTIFY THE PROJECT REPRESENTATIVE IMMEDIATELY. DO NOT CONTINUE DRILLING WITHOUT THE REPRESENTATIVE'S APPROVAL.

THE PITS SIZE SHALL BE APPROXIMATELY 4' WIDE BY 8' LONG TO ACCOMMODATE THE DRILLING MACHINE AND EQUIPMENT. PIT DEPTH WILL VARY DEPENDING ON THE DEPTH OF THE PIPE INVERT AT EACH PIT LOCATION. IF POSSIBLE MINIMIZE PIT SIZE TO REDUCE THE IMPACT TO THE SURROUNDING AREA.

THE CONTRACTOR SHALL SATISFY HIMSELF AS TO THE EXISTING SUBSURFACE CONDITIONS THAT MAY IMPACT DIRECTIONAL DRILLING OPERATIONS. CONTRACTOR SHALL HAVE NO CLAIMS FOR ADDITIONAL COMPENSATION IF UNEXPECTED SUBSURFACE CONDITIONS ARE ENCOUNTERED DURING CONSTRUCTION.

THE ADJACENT EXISTING UNDERGROUND UTILITY LINES SHALL NOT BE DISTURBED, AND THE EXISTING STRUCTURE SHALL BE PROTECTED FROM HORIZONTAL AND VERTICAL MOVEMENT.

AFTER COMPLETING EACH SECTION OF THE SEWER LINE, THE CONTRACTOR SHALL REMOVE DEBRIS, CONSTRUCTION MATERIALS, AND EQUIPMENT FROM THE SITE AND GRADE AND SMOOTH OVER THE SURFACE OF ACCESS PITS AND OTHER EXCAVATIONS. SPECIAL PRECAUTIONS SHALL BE TAKEN TO TENT AND TARP EXCAVATIONS AND STOCKPILES DURING WINTER CONSTRUCTION.

REFER TO THE GEOTECHNICAL REPORTS IN EXHIBIT C OF THE CONSTRUCTION CONTRACT DOCUMENTS THAT SHOW WHERE ROCK WILL BE ENCOUNTERED.

7. TRENCH WORK

7.1. EXTRA PRECAUTION SHALL BE TAKEN BY THE CONTRACTOR IN EXCAVATION FOR THE INSTALLATION OF THE PIPE IN AREAS WHERE THE PIPE MAY CROSS EXISTING UNDERGROUND UTILITIES AND OTHER FACILITIES OF ANY NATURE. CONTRACTOR SHALL PERFORM HIS OPERATION IN SUCH A MANNER AND SHALL EXERCISE THE GREATEST OF CARE, SO AS NOT TO INJURE IN ANY MANNER EXISTING UNDERGROUND UTILITIES, MAINS OR FACILITIES OF ANY NATURE. SHOULD THE CONTRACTOR INJURE, BREAK, OR DAMAGE EXISTING UNDERGROUND UTILITIES, MAINS, OR FACILITIES OF ANY NATURE IN ANY MANNER, THEY SHALL REPAIR THE SAME AT THEIR OWN EXPENSE. IF IT DOES NOT APPEAR FEASIBLE THAT THE CONTRACTOR CAN MAKE THE NEEDED REPAIRS, THEN SUCH REPAIRS SHALL BE MADE BY THE COUNTY AND THE CONTRACTOR SHALL BE CHARGED FOR SUCH REPAIRS.

7.2. PIPE TRENCHES

EXCAVATION OF PIPE TRENCHES SHALL CONFORM TO ALL SAN MATEO COUNTY REGULATIONS WHEN OPEN TRENCHING OCCURS ON COUNTY ROADS. PIPE TRENCHES WILL BE CONSTRUCTED TO THE DIMENSIONS SPECIFIED IN THE DESIGN PLANS.

7.2.1. TRENCHING CUTS SHALL FOLLOW NEAT AND PARALLEL LINES FOR THE TRENCH WIDTH, IN GENERAL, TO BE ONE FOOT WIDE. TRENCHES MAY BE WIDER AS REQUIRED TO PLACE VALVES AND FITTINGS WITH A MINIMUM OF 4-INCH CLEARANCE TO TRENCH WALL. TRENCHES SHALL BE NO LESS THAN 30 INCHES DEEP, EXCEPT WHEN IT IS NECESSARY TO AVOID UNDERGROUND OBSTRUCTIONS OR ROCKY CONDITIONS. IN ALL CASES, THE PIPE SHALL BE PLACED ON A BED OF IMPORTED OR NATIVE SOIL MATERIAL PROVIDING CONTINUOUS SUPPORT THROUGHOUT ITS LENGTH.

7.2.2. BACKFILL FOR THE PIPE TO THE TOP OF THE PIPE PLUS 4 INCHES SHALL BE SELECTED OR IMPORTED SANDY MATERIAL FREE OF STONE, CLAY, LIMBS, OR OTHER DELETERIOUS MATERIALS IN EXCESS OF ½ INCH MAXIMUM DIMENSION. THIS BACKFILL SHALL BE PLACED AND TAMPED OR PADDLED ABOUT THE PIPE TO ENSURE PROPER BEDDING PRIOR TO COMPLETION OF TRENCH FILL. THE REMAINING BACKFILL SHALL BE PLACED AT 95% RELATIVE COMPACTION.

7.2.3. EXTRA PRECAUTION SHALL BE TAKEN BY THE INSTALLER WHEN EXCAVATION IN AREAS WHERE THE PIPE MAY CROSS EXISTING UNDERGROUND UTILITIES AND OTHER FACILITIES OF ANY NATURE. THE INSTALLER SHALL PERFORM THIS OPERATION IN SUCH A MANNER AND SHALL EXERCISE THE GREATEST CARE SO AS NOT TO INJURE IN ANY MANNER EXISTING UNDERGROUND UTILITIES, MAINS, OR FACILITIES OF ANY NATURE. SHOULD THE INSTALLER INJURE, BREAK, OR DAMAGE EXISTING UNDERGROUND UTILITIES, MAINS, OR FACILITIES OF ANY NATURE IN ANY MANNER, THEY SHALL REPAIR THE SAME.

7.2.4. DEWATERING. WHERE RUNNING OR STANDING WATER OCCURS IN THE TRENCH BOTTOM OR WHERE THE SOIL IN THE TRENCH BOTTOM DISPLAYS A "QUICK" TENDENCY, THE WATER SHALL BE REMOVED BY PUMPS.

7.2.5. SHORING. TRENCHES MUST BE SHORED AS REQUIRED BY THE LOCAL AGENCY AND THE STATE OF CALIFORNIA DIVISION OF INDUSTRIAL SAFETY CONSTRUCTION SAFETY ORDERS.

7.2.6. MANHOLES. MANHOLE SHELF SHALL BE MORTARED TO A SLOPE OF 1"/FT AND STANDARD WATER STOPS SHALL BE INCORPORATED INTO THE MANHOLE BASE FOR ALL PENETRATIONS INTO THE MANHOLE. ALL STEEL SHALL BE 6" CLEAR. TOP HALF OF PIPE SHALL BE REMOVED TO THE CONTOUR OF THE INSIDE OF THE MANHOLE AND THE BROKEN EDGES SHALL BE PLASTERED SMOOTH WITH CEMENT. CARE SHALL BE EXERCISED IN CUTTING THESE OPENINGS TO PREVENT CRACKING OR BREAKING OF SAID SANITARY SEWER MANHOLE. PIPE OPENINGS BROKEN IN A RAGGED AND UNWORKMANLIKE MANNER, AS DETERMINED BY THE ENGINEER/PARKS, SHALL BE REJECTED AND EITHER REPAIRED OR REPLACED, AS DIRECTED BY THE ENGINEER/PAKRS, ALL AT THE CONTRACTOR'S SOLE EXPENSE, AND NO ADDITIONAL COMPENSATION WILL BE ALLOWED THEREFORE. SEE DETAIL 1 AND 2 ON SHEET WW3.1 FOR MORE DETAILS.

7.2.7. MANHOLE DROP INLET. USE A CONCRETE ENCASEMENT WITH 6" OF MINIMUM COVER ALONG THE PIPE. USE A 1/2" BY 1/2" EPOXY MORTAR DAM AND A REVERSE "Y" TO GET PIPE VERTICAL. SEE DETAIL 3 AND SHEET WW3.0 FOR MORE DETAIL.

8. FINISH GRADING AND CLEAN UP

SPREAD TOPSOIL AND FINISH GRADE ANY DISTURBED SOIL AREAS TO SMOOTHLY TRANSITION WITH THE SURROUNDING GROUND LINES AND STRUCTURES. ONCE THE EARTHWORK IS STABLE, PROMPTLY REMOVE ANY TEMPORARY EROSION CONTROL MATERIALS. POWER WASH ANY SOILED PAVED AREAS.

ALL CONSTRUCTION ACTIVITIES SHALL CONFORM TO THE CURRENT SAN MATEO COUNTY AND AMERICAN WATER WORKS ASSOCIATION STANDARDS.

9. PIPES AND ASSEMBLY

HIGH DENSITY POLYETHYLENE (HDPE) PIPE SHALL BE INSTALLED IN ACCORDANCE WITH THE INSTRUCTION OF THE MANUFACTURER, AS SHOWN ON THE DRAWINGS AND AS SPECIFIED HEREIN.

CARE SHALL BE TAKEN IN LOADING, TRANSPORTING AND UNLOADING TO PREVENT DAMAGE TO THE PIPE. PIPE OR FITTING SHALL NOT BE DROPPED. ALL PIPE OR FITTING SHALL BE EXAMINED BEFORE INSTALLATION, AND NO PIECE SHALL BE INSTALLED WHICH IS FOUND TO BE DEFECTIVE. ANY DAMAGE TO THE PIPE SHALL BE REPAIRED AS DIRECTED BY THE ENGINEER. IF ANY DEFECTIVE PIPE IS DISCOVERED AFTER IT HAS BEEN INSTALLED, IT SHALL BE REMOVED AND REPLACED WITH A SOUND PIPE IN A SATISFACTORY MANNER BY THE CONTRACTOR, AT HIS/HER OWN EXPENSE.

PIPE SHALL BE STORED ON CLEAN LEVEL GROUND TO PREVENT UNDUE SCRATCHING OR GOUGING. THE HANDLING OF THE PIPE SHALL BE IN SUCH A MANNER THAT THE PIPE IS NOT DAMAGED BY DRAGGING IT OVER SHARP AND CUTTING OBJECTS. THE MAXIMUM ALLOWABLE DEPTH OF CUTS, SCRATCHES OR GOUGES ON THE EXTERIOR OF THE PIPE IS 5 PERCENT OF WALL THICKNESS. THE INTERIOR PIPE SURFACE SHALL BE FREE OF CUTS, GOUGES OR SCRATCHES.

ALL PIPE AND FITTINGS SHALL BE THOROUGHLY CLEANED BEFORE INSTALLATION, SHALL BE KEPT CLEAN UNTIL THEY ARE USED IN THE WORK. PIPE SHALL BE LAID TO LINES AND GRADE SHOWN ON THE DRAWINGS WITH BEDDING AND BACKFILL AS SHOWN ON THE DRAWINGS.

THE PIPE SHALL BE JOINED WITH BUTT, HEAT FUSION JOINTS AS OUTLINED IN ASTM D2657 AND CONFORM TO THE GENERIC BUTT FUSION JOINING PROCEDURE FOR FIELD JOINING OF POLYETHYLENE PIPE, TECHNICAL REPORT TR-33/2005, PUBLISHED BY THE PLASTIC PIPE INSTITUTE (PPI). ALL JOINTS SHALL BE MADE IN STRICT COMPLIANCE WITH THE MANUFACTURER'S RECOMMENDATIONS. A FACTORY QUALIFIED JOINING TECHNICIAN AS DESIGNATED BY PIPE MANUFACTURER OR EXPERIENCED, TRAINED TECHNICIAN SHALL PERFORM ALL HEAT FUSION JOINTS.

ALL PIPES SO JOINED SHALL BE MADE FROM THE SAME CLASS AND TYPE OF RAW MATERIAL MADE BY THE SAME RAW MATERIAL SUPPLIER.

WHEN LAYING IS NOT IN PROGRESS, INCLUDING LUNCHTIME, THE OPEN ENDS OF THE PIPE SHALL BE CLOSED BY FABRICATED PLUGS, OR BY OTHER APPROVED MEANS.

SECTIONS OF PIPE WITH CUTS, SCRATCHES OR GOUGES EXCEEDING 5 PERCENT OF THE PIPE WALL THICKNESS SHALL BE REMOVED COMPLETELY AND THE ENDS OF THE PIPELINE REJOINED.

ALL PIPE JOINTS SHALL BE BY THERMAL BUTT-FUSION. THE USE OF SOCKET FUSION, AND ELECTRO-FUSION COUPLINGS IS ACCEPTABLE. THE USE OF MECHANICAL JOINTS SHALL BE AT ENGINEER'S DISCRETION.

TRANSITION FITTINGS (HDPE TO STEEL) SHALL BE COMPRESSION STYLE OR WELD IN PLACE (THERMAL BUTT-FUSION). TRANSITION FITTING SHALL BE RATED FOR A WORKING PRESSURE OF 160 PSI.

DEBEADING SHALL BE DONE TO REMOVE THE OVERFLOW OF POLYETHYLENE THAT IS EXTRUDED ON THE INSIDE AND OUTSIDE OF THE PIPE. THE DEBEADING TECHNIQUE USED SHOULD NOT GOUGE OR OTHERWISE DAMAGE THE PIPE.

FLANGED CONNECTIONS SHALL BE PROVIDED WITH A FULL-FACE NEOPRENE GASKET AND SHALL CONSISTS OF A POLYETHYLENE FLANGE THERMALLY BUTT-FUSED TO THE STUB END OF THE PIPE AND A 316 STAINLESS STEEL BACK UP RING TO MATE WITH A 316 STAINLESS STEEL FLANGE. 316 STAINLESS STEEL BOLTS AND NUTS SHALL BE USED.

ALL WATERLINES SHALL NOT HAVE LESS THAN 18 INCHES OF COVER OVER THE TOP OF THE PIPE, EXCEPT WHERE NECESSARY TO AVOID UNDERGROUND OBSTRUCTIONS OR ROCKY CONDITIONS. SERVICE CONNECTION PIPE AND FITTINGS SHALL BE DESIGNED FOR COLD WATER WORKING PRESSURES OF NOT LESS THAN 160 PSI.

THE TRENCH SHALL HAVE A MINIMUM WIDTH OF 12 INCHES AND THE BOTTOM OF THE TRENCH SHALL BE LEVELED. THE PIPELINE SHALL BE SUPPORTED BY A BEDDING MATERIAL OF CLEAN NATIVE SOIL OR SAND. THE CONTRACTOR SHALL REMOVE ANY ROCKS OR OTHER INTERFERING MATERIALS THAT COULD POTENTIALLY PUNCTURE THE PIPELINE.

10. FLUSHING AND TESTING

AFTER COMPLETION, ALL PIPELINES SHALL BE THOROUGHLY FLUSHED TO REMOVE DIRT, SCALE, OR OTHER MATERIAL. AFTER FLUSHING, THE LINE SHALL BE PRESSURE TESTED. ALL EQUIPMENT, MATERIALS AND LABOR NECESSARY TO PERFORM THE TESTS SHALL BE FURNISHED BY THE CONTRACTOR AND ALL TESTS SHALL BE CONDUCTED IN THE PRESENCE OF THE OWNER OR ENGINEER.

11. FINAL INSPECTION

THE CONTRACTOR MUST PERFORM A FINAL INSPECTION WITH THE PROJECT ENGINEER TO VERIFY SYSTEMS ARE OPERATIONAL AND FUNCTIONING AS DESIGNED. THE PROJECT ENGINEER SHALL PROVIDE AN OPERATION AND MAINTENANCE PLAN AS WELL AS ONSITE TRAINING FOR MAINTENANCE STAFF.

12. AS-BUILT DRAWINGS

THE CONTRACTOR SHALL PROVIDE THE OWNER WITH A SET OF AS-BUILT DRAWINGS OF THE LAYOUT AND CONSTRUCTION OF THE SYSTEM.

22"x34" SHEET. IF SHEET SIZE IS SMALLER, DRAWING HAS BEEN REDUCED.

SHEET TITLE:
CONSTRUCTION SPECIFICATIONS

CLIENT:
SAN MATEO COUNTY PARKS
ATTN: MARIO NASTARI
4555 COUNTY CENTER, 4TH FLOOR
REDWOOD CITY, CA 94063
TEL: (650) 363-4020

PROJECT TITLE:
WASTEWATER SYSTEM IMPROVEMENTS
MEMORIAL PARK, 9500 PESCADERO CREEK RD
LOMA MAR, CA 94021

SHERWOOD DESIGN ENGINEERS
1525 Seabright Ave
Santa Cruz, CA 95062
www.sherwoodengineers.com

REGISTERED PROFESSIONAL ENGINEER
PETER H. HARTMAN
NO. 055605
EXP. 12/31/20
CIVIL
STATE OF CALIFORNIA

DRAWN BY:	JRS
CHECKED BY:	CJC/PHH
DATE:	SEPTEMBER 1, 2020
JOB NO:	19-268
SCALE:	AS SHOWN
SHEET:	WW4.1

UNDERGROUND UTILITY NOTES:

NOT ALL UTILITIES MAY BE SHOWN.
SOME LATERALS WERE NOT ACCESSIBLE & WERE THEREFORE NOT LOCATED.
DEPTHS SHOWN ARE TO CENTER OF CONDUCTIVE UTILITY & ARE GENERALLY +/−10% OF ACTUAL DEPTH, WHEN NOT DISTORTED BY ADJACENT CONDUCTORS. ACCURACY OF ELECTRONIC DEPTH DECREASES WHEN ADJACENT UTILITIES ARE LOCATED WITHIN 5 FT.
CRITICAL DEPTHS REQUIRE VERIFICATION BY POTHOLING.
SANITARY & STORM DEPTHS ARE MEASURED FROM RIM TO INVERT LEVEL.

ASSUMED PROJECT NORTH

0 5' 10' 20'

SCALE IN FEET (1"=10')

UTILITY LEGEND:

UTILITY NAME
DIAMETER
0.5SS 4.5
DEPTH

SURVEYOR NOTES:

1. ALL DISTANCES AND DIMENSIONS ARE SHOWN IN FEET AND DECIMALS THEREOF OR UNLESS NOTED OTHERWISE
2. DATE OF FIELD SURVEY: SEPTEMBER 23, 2019
3. COORDINATES ARE ON AN ASSUMED COORDINATES SYSTEM
4. ELEVATIONS ARE ON AN ASSUMED DATUM
5. CONTOUR INTERVAL IS 1 FOOT
6. TREES THAT ARE CLUSTERED OR IRREGULAR IN SHAPE ARE OUTLINED AT GROUND LEVEL
7. TREE DIAMETERS WERE MEASURED AT BREAST HEIGHT ABOVE GROUND

LEGEND:

AC	ASPHALT CONCRETE
BLDG	BUILDING
BOLL ●	BOLLARD
BOW	BOTTOM WALL
CL	CENTER LINE
C−PAD	CONCRETE PAD
DI	STORM DROP INLET
E	ELECTRICAL
EP	EDGE OF PAVEMENT
FNC	FENCE
FND	FOUND
GS	GROUND ELEVATION
GB	GRADEBREAK
HB	HOSE BIB
NL	NOT LOCATED
RDWD	REDWOOD
SS	SANITARY SEWER
SSMH Ⓢ	SANITARY SEWER MANHOLE
VCP	VITRIFIED CLAY PIPE
W	WATER
WNL	WATER LINE NOT LOCATED
WP	WORK POINT
WTR	WATER
WV	WATER VALVE
	BUILDING HATCH
	FENCE LINE
	PAVED ROAD
	ELECTRICAL LINE
	SEWER LINE
	WATER LINE
	SURVEY CONTROL POINT

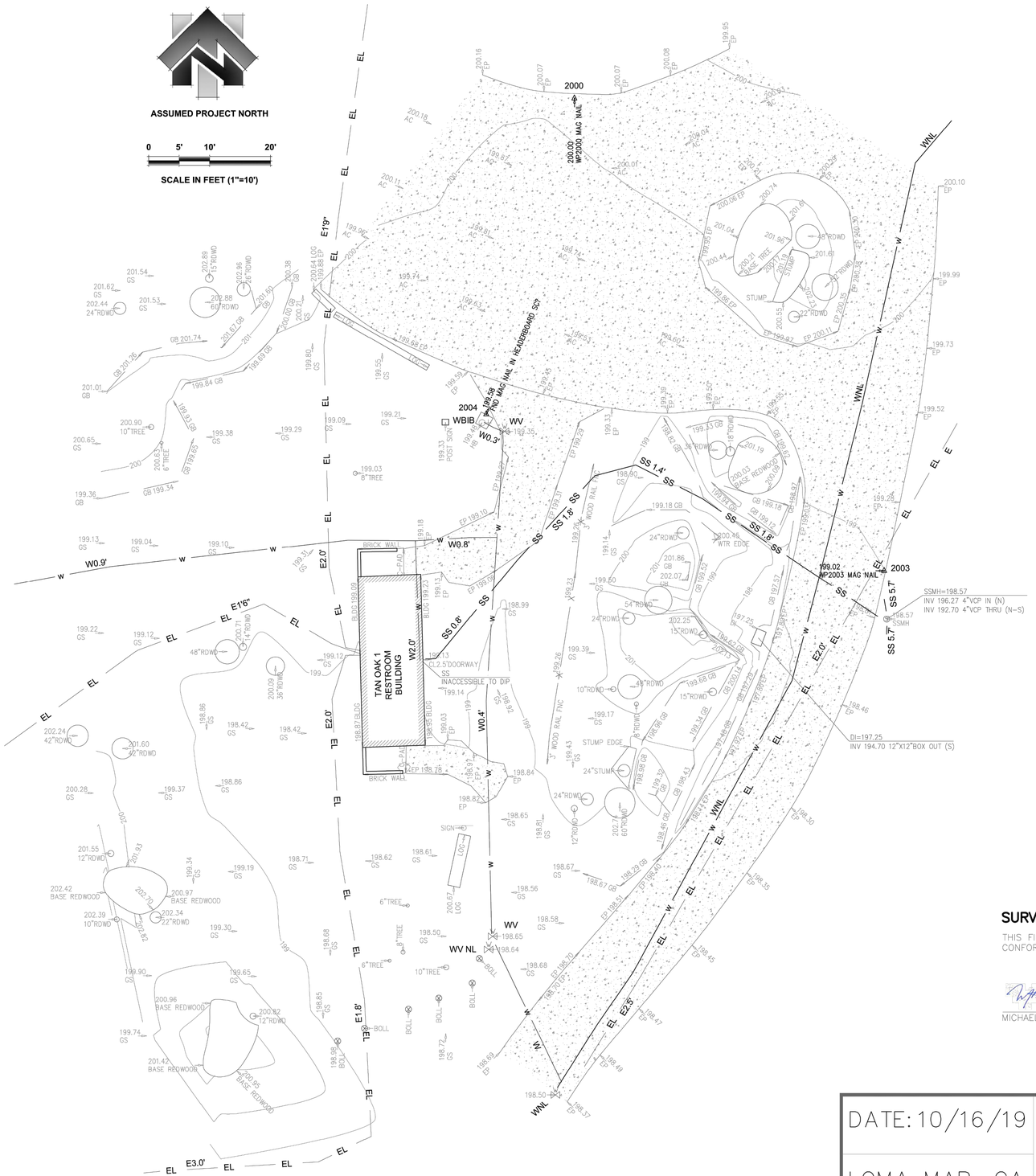

CONTROL POINT TABLE				
POINT	NORTHING	EASTING	ELEVATION	DESCRIPTION
2000	2000.00	2000.00	200.00	WP2000 MAG NAIL
2001	1783.15	1961.76	197.96	WP2001 MAG NAIL
2002	2027.51	2049.77	200.28	FND CUT X ON CONC PAD (SC2)
2003	1922.43	2050.85	199.02	WP2003 MAG NAIL
2004	1948.12	1985.52	199.58	FND MAG NAIL IN HEADERBOARD (SC4)

SURVEYOR'S STATEMENT

THIS FIELD SURVEY DATA WAS PREPARED UNDER MY DIRECTION IN CONFORMANCE WITH THE PROFESSIONAL LAND SURVEYORS ACT.

MICHAEL A. SHOUP, PLS

PROFESSIONAL LAND SURVEYOR MICHAEL A. SHOUP No. 7616 STATE OF CALIFORNIA

DATE: 10/16/19

LOMA MAR, CA

R.E.Y. ENGINEERS, INC.
Civil Engineers | Land Surveyors | LiDAR
707 NORTH SHORELINE BOULEVARD
MOUNTAIN VIEW, CA 94043
Phone: (408) 219−3236

SHEET 1 OF 1

SHEET TITLE:
INFORMATIONAL SHEET - TAN OAKS RESTROOM 1

CLIENT:
SAN MATEO COUNTY PARKS
ATTN: MARIO NASTARI
4555 COUNTY CENTER, 4TH FLOOR
REDWOOD CITY, CA 94063
TEL: (650) 363-4020

PROJECT TITLE:
WASTEWATER SYSTEM IMPROVEMENTS
MEMORIAL PARK, 9500 PESCADERO CREEK RD
LOMA MAR, CA 94021

SHERWOOD DESIGN ENGINEERS
1525 Seabright Ave
Santa Cruz, CA 95062
www.sherwoodengineers.com

REGISTERED PROFESSIONAL ENGINEER PETER H. KNOX NO. 055605 EXP. 12/31/20 CIVIL STATE OF CALIFORNIA

DRAWN BY:	JRS
CHECKED BY:	CJC/PHH
DATE:	SEPTEMBER 1, 2020
JOB NO:	19-268
SCALE:	AS SHOWN
SHEET:	WW5.0

11 OF 20

22"x34" SHEET. IF SHEET SIZE IS SMALLER, DRAWING HAS BEEN REDUCED.

UNDERGROUND UTILITY NOTES:

NOT ALL UTILITIES MAY BE SHOWN.
SOME LATERALS WERE NOT ACCESSIBLE & WERE THEREFORE NOT LOCATED.
DEPTHS SHOWN ARE TO CENTER OF CONDUCTIVE UTILITY & ARE GENERALLY +/−10% OF ACTUAL DEPTH, WHEN NOT DISTORTED BY ADJACENT CONDUCTORS. ACCURACY OF ELECTRONIC DEPTH DECREASES WHEN ADJACENT UTILITIES ARE LOCATED WITHIN 5 FT.
CRITICAL DEPTHS REQUIRE VERIFICATION BY POTHOLING.
SANITARY & STORM DEPTHS ARE MEASURED FROM RIM TO INVERT LEVEL.

UTILITY LEGEND:

UTILITY NAME
DIAMETER
0.5SS 4.5
DEPTH

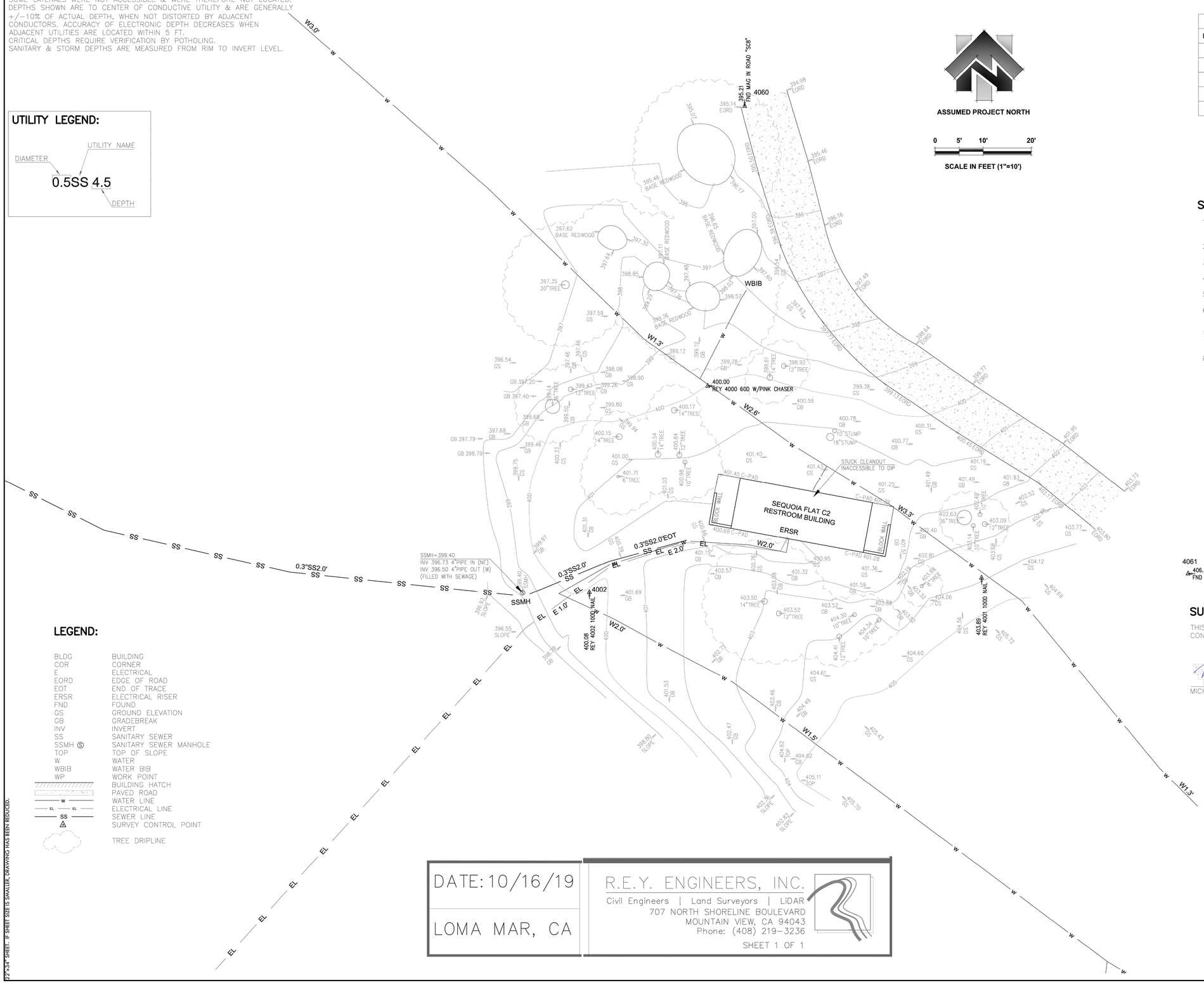

LEGEND:

BLDG	BUILDING
COR	CORNER
E	ELECTRICAL
EORD	EDGE OF ROAD
EOT	END OF TRACE
ERSR	ELECTRICAL RISER
FND	FOUND
GS	GROUND ELEVATION
GB	GRADEBREAK
INV	INVERT
SS	SANITARY SEWER
SSMH Ⓢ	SANITARY SEWER MANHOLE
TOP	TOP OF SLOPE
W	WATER
WBIB	WATER BIB
WP	WORK POINT
	BUILDING HATCH
	PAVED ROAD
W	WATER LINE
EL EL	ELECTRICAL LINE
SS	SEWER LINE
△	SURVEY CONTROL POINT
	TREE DRIPLINE

CONTROL POINT TABLE

POINT	NORTHING	EASTING	ELEVATION	DESCRIPTION
4000	4000.00	4000.00	400.00	REY 4000 60D W/PINK CHASER
4001	3960.09	4056.99	403.89	REY 4001 100D NAIL
4002	3957.08	3975.36	400.08	REY 4002 100D NAIL
4060	4058.24	4007.67	395.21	FND MAG IN ROAD "SC8"
4061	3960.95	4099.98	406.30	FND MAG ID ROAD "SC7"

SURVEYOR NOTES:

1. ALL DISTANCES AND DIMENSIONS ARE SHOWN IN FEET AND DECIMALS THEREOF OR UNLESS NOTED OTHERWISE
2. DATE OF FIELD SURVEY: SEPTEMBER 23, 2019
3. COORDINATES ARE ON AN ASSUMED COORDINATES SYSTEM
4. ELEVATIONS ARE ON AN ASSUMED DATUM
5. CONTOUR INTERVAL IS 1 FOOT
6. TREES THAT ARE CLUSTERED OR IRREGULAR IN SHAPE ARE OUTLINED AT GROUND LEVEL
7. TREE DIAMETERS WERE MEASURED AT BREAST HEIGHT ABOVE GROUND
8. COULD NOT LOCATE SANITARY SEWER CLEANOUT AT RESTROOM BUILDING

SURVEYOR'S STATEMENT

THIS FIELD SURVEY DATA WAS PREPARED UNDER MY DIRECTION IN CONFORMANCE WITH THE PROFESSIONAL LAND SURVEYORS ACT.

MICHAEL A. SHOUP, PLS

PROFESSIONAL LAND SURVEYOR
MICHAEL A. SHOUP
No. 7616
STATE OF CALIFORNIA

DATE: 10/16/19

LOMA MAR, CA

R.E.Y. ENGINEERS, INC.
Civil Engineers | Land Surveyors | LiDAR
707 NORTH SHORELINE BOULEVARD
MOUNTAIN VIEW, CA 94043
Phone: (408) 219-3236

SHEET 1 OF 1

22"x34" SHEET. IF SHEET SIZE IS SMALLER, DRAWING HAS BEEN REDUCED.

SHEET TITLE:
INFORMATIONAL SHEET - SEQUOIA FLAT RESTROOM C2

CLIENT:
SAN MATEO COUNTY PARKS
ATTN: MARIO NASTARI
4555 COUNTY CENTER, 4TH FLOOR
REDWOOD CITY, CA 94063
TEL: (650) 363-4020

PROJECT TITLE:
WASTEWATER SYSTEM IMPROVEMENTS
MEMORIAL PARK, 9500 PESCADERO CREEK RD
LOMA MAR, CA 94021

SHERWOOD DESIGN ENGINEERS
1525 Seabright Ave
Santa Cruz, CA 95062
www.sherwoodengineers.com

REGISTERED PROFESSIONAL ENGINEER
CHRISTOPHER H. HAMILTON
NO. 055605
EXP. 12/31/20
CIVIL
STATE OF CALIFORNIA

DRAWN BY:	JRS
CHECKED BY:	CJC/PHH
DATE:	SEPTEMBER 1, 2020
JOB NO:	19-268
SCALE:	AS SHOWN
SHEET:	WW5.1

UNDERGROUND UTILITY NOTES:

NOT ALL UTILITIES MAY BE SHOWN.
SOME LATERALS WERE NOT ACCESSIBLE & WERE THEREFORE NOT LOCATED.
DEPTHS SHOWN ARE TO CENTER OF CONDUCTIVE UTILITY & ARE GENERALLY +/−10% OF ACTUAL DEPTH, WHEN NOT DISTORTED BY ADJACENT CONDUCTORS. ACCURACY OF ELECTRONIC DEPTH DECREASES WHEN ADJACENT UTILITIES ARE LOCATED WITHIN 5 FT.
CRITICAL DEPTHS REQUIRE VERIFICATION BY POTHOLING.
SANITARY & STORM DEPTHS ARE MEASURED FROM RIM TO INVERT LEVEL.

UTILITY LEGEND:

UTILITY NAME
DIAMETER
0.5SS 4.5
DEPTH

SURVEYOR NOTES:

1. ALL DISTANCES AND DIMENSIONS ARE SHOWN IN FEET AND DECIMALS THEREOF OR UNLESS NOTED OTHERWISE
2. DATE OF FIELD SURVEY: SEPTEMBER 23, 2019
3. COORDINATES ARE ON AN ASSUMED COORDINATES SYSTEM
4. ELEVATIONS ARE ON AN ASSUMED DATUM
5. CONTOUR INTERVAL IS 1 FOOT
6. TREES THAT ARE CLUSTERED OR IRREGULAR IN SHAPE ARE OUTLINED AT GROUND LEVEL
7. TREE DIAMETERS WERE MEASURED AT BREAST HEIGHT ABOVE GROUND

LEGEND:

ABS	ACRYLONITRILE BUTADIENE STYRENE
BLDG	BUILDING
BOW	BOTTOM WALL
C−PAD	CONCRETE PAD
E	ELECTRICAL
EP	EDGE OF PAVEMENT
ERSR	ELECTRICAL RISER
FNC	FENCE
FND	FOUND
GUY	GUY WIRE
GS	GROUND ELEVATION
GB	GRADEBREAK
OHW	OVERHEAD WIRE
RDWD	REDWOOD TREE
SS	SANTIARY SEWER
SSCO	SANITARY SEWER CLEANOUT
W	WATER
WP	WORK POINT
	BUILDING HATCH
HO	OVERHEAD WIRE
	PAVED ROAD
X	FENCE LINE
EL	ELECTRICAL LINE
SS	SEWER LINE
W	WATER LINE
	SURVEY CONTROL POINT

ASSUMED PROJECT NORTH

0 5' 10' 20'
SCALE IN FEET (1"=10')

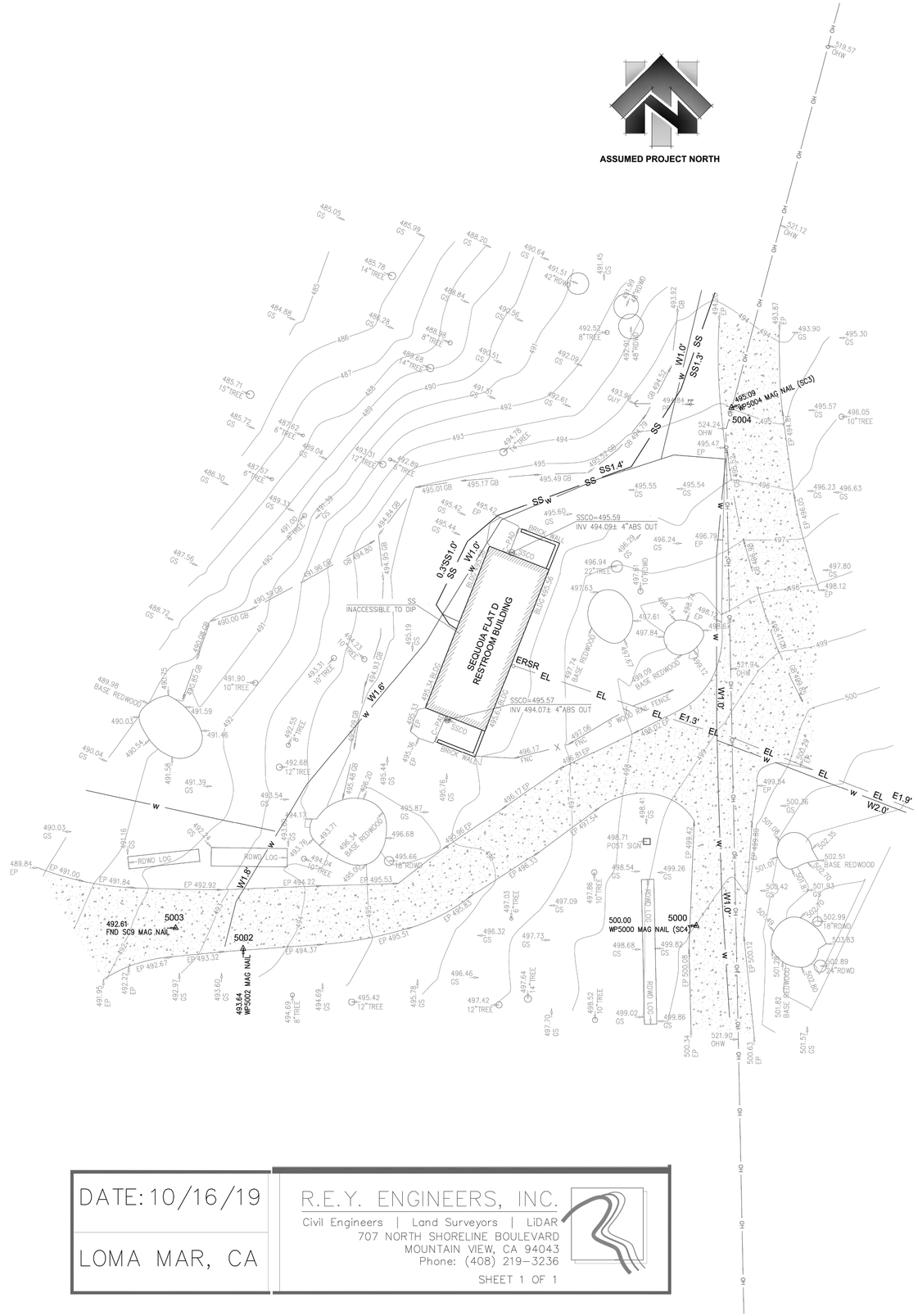

CONTROL POINT TABLE				
POINT	NORTHING	EASTING	ELEVATION	DESCRIPTION
5000	5000.00	5000.00	500.00	WP5000 MAG NAIL (SC4)
5001	5262.70	5046.32	491.33	WP5001 MAG NAIL (SC1)
5002	4996.30	4926.96	493.64	WP5002 MAG NAIL
5003	4999.61	4916.10	492.61	FND SC9 MAG NAIL
5004	5083.47	5005.66	495.09	WP5004 MAG NAIL (SC3)

SURVEYOR'S STATEMENT

THIS FIELD SURVEY DATA WAS PREPARED UNDER MY DIRECTION IN CONFORMANCE WITH THE PROFESSIONAL LAND SURVEYORS ACT.

MICHAEL A. SHOUP, PLS

PROFESSIONAL LAND SURVEYOR
MICHAEL A. SHOUP
No. 7616
STATE OF CALIFORNIA

DATE: 10/16/19

LOMA MAR, CA

R.E.Y. ENGINEERS, INC.
Civil Engineers | Land Surveyors | LiDAR
707 NORTH SHORELINE BOULEVARD
MOUNTAIN VIEW, CA 94043
Phone: (408) 219−3236
SHEET 1 OF 1

SHEET TITLE:
INFORMATIONAL SHEET - SEQUOIA FLAT RESTROOM D

CLIENT:
SAN MATEO COUNTY PARKS
ATTN: MARIO NASTARI
4555 COUNTY CENTER, 4TH FLOOR
REDWOOD CITY, CA 94063
TEL: (650) 363-4020

PROJECT TITLE:
WASTEWATER SYSTEM IMPROVEMENTS
MEMORIAL PARK, 9500 PESCADERO CREEK RD
LOMA MAR, CA 94021

SHERWOOD DESIGN ENGINEERS
1525 Seabright Ave
Santa Cruz, CA 95062
www.sherwoodengineers.com

REGISTERED PROFESSIONAL ENGINEER
PETER H. HUNG
NO. 055605
EXP. 12/31/20
CIVIL
STATE OF CALIFORNIA

DRAWN BY:	JRS
CHECKED BY:	CJC/PHH
DATE:	SEPTEMBER 1, 2020
JOB NO:	19-268
SCALE:	AS SHOWN
SHEET:	WW5.2

22"X34" SHEET. IF SHEET SIZE IS SMALLER, DRAWING HAS BEEN REDUCED.

UNDERGROUND UTILITY NOTES:

NOT ALL UTILITIES MAY BE SHOWN.
SOME LATERALS WERE NOT ACCESSIBLE & WERE THEREFORE NOT LOCATED.
DEPTHS SHOWN ARE TO CENTER OF CONDUCTIVE UTILITY & ARE GENERALLY +/−10% OF ACTUAL DEPTH, WHEN NOT DISTORTED BY ADJACENT CONDUCTORS. ACCURACY OF ELECTRONIC DEPTH DECREASES WHEN ADJACENT UTILITIES ARE LOCATED WITHIN 5 FT.
CRITICAL DEPTHS REQUIRE VERIFICATION BY POTHOLING.
SANITARY & STORM DEPTHS ARE MEASURED FROM RIM TO INVERT LEVEL.

UTILITY LEGEND:

UTILITY NAME
DIAMETER
0.5SS 4.5
DEPTH

CONTROL POINT TABLE				
POINT	NORTHING	EASTING	ELEVATION	DESCRIPTION
7000	7000.00	7000.00	700.00	WP7000 60 NAIL
7001	7151.80	6944.75	699.18	WP7001 MAG NAIL
7003	6973.30	6993.08	699.84	FND MAG SC6
7004	6962.13	6956.03	697.10	WP7004 60D
7005	6932.28	6912.65	692.96	WP7005 60D
7006	7101.43	6970.01	701.42	WP7006 60D
7007	7073.32	6963.85	700.10	WP7007 60D

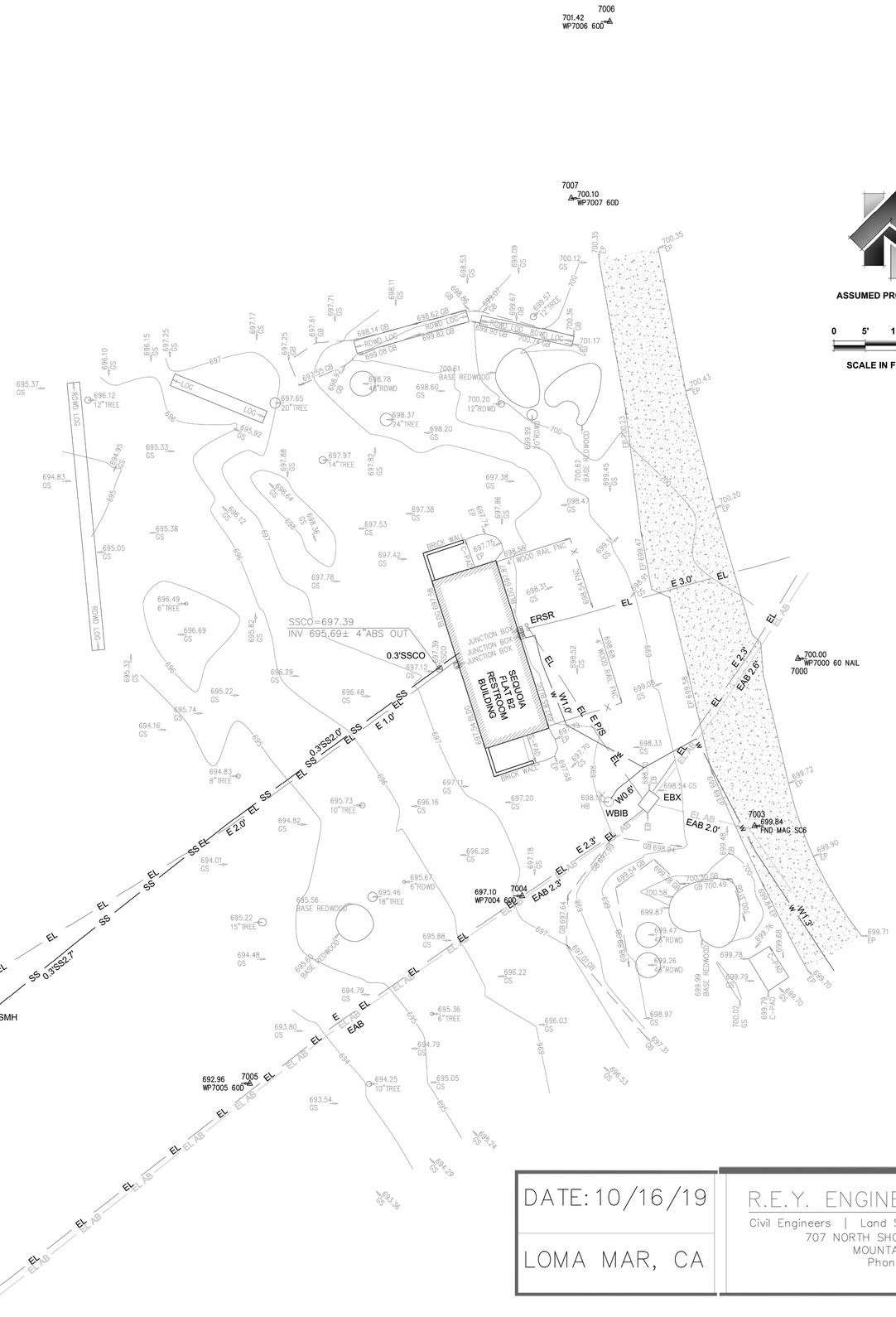

ASSUMED PROJECT NORTH

0 5' 10' 20'
SCALE IN FEET (1"=10')

SURVEYOR NOTES:

1. ALL DISTANCES AND DIMENSIONS ARE SHOWN IN FEET AND DECIMALS THEREOF OR UNLESS NOTED OTHERWISE
2. DATE OF FIELD SURVEY: SEPTEMBER 23, 2019
3. COORDINATES ARE ON AN ASSUMED COORDINATES SYSTEM
4. ELEVATIONS ARE ON AN ASSUMED DATUM
5. CONTOUR INTERVAL IS 1 FOOT
6. TREES THAT ARE CLUSTERED OR IRREGULAR IN SHAPE ARE OUTLINED AT GROUND LEVEL
7. TREE DIAMETERS WERE MEASURED AT BREAST HEIGHT ABOVE GROUND

LEGEND:

ABS	ACRYLONITRILE BUTADIENE STYRENE
BLDG	BUILDING
BOW	BOTTOM WALL
C−PAD	CONCRETE PAD
E	ELECTRICAL
EAB	ELECTRICAL ABANDONED
EB	ELECTRICAL BOX
EP	EDGE OF PAVEMENT
ERSR	ELECTRICAL RISER
FNC	FENCE
GS	GROUND ELEVATION
GB	GRADEBREAK
HB	HOSE BIB
RDWD	REDWOOD TREE
SS	SANITARY SEWER
SSCO	SANITARY SEWER CLEANOUT
W	WATER
WBIB	WATER BIB
WP	WORK POINT
	BUILDING HATCH
	PAVED ROAD
X	FENCE LINE
EL AB	ELECTRICAL ABANDONED LINE
EL	ELECTRICAL LINE
SS	SEWER LINE
W	WATER LINE
	SURVEY CONTROL POINT

SURVEYOR'S STATEMENT

THIS FIELD SURVEY DATA WAS PREPARED UNDER MY DIRECTION IN CONFORMANCE WITH THE PROFESSIONAL LAND SURVEYORS ACT.

MICHAEL A. SHOUP, PLS

PROFESSIONAL LAND SURVEYOR MICHAEL A. SHOUP No. 7616 STATE OF CALIFORNIA

DATE: 10/16/19

LOMA MAR, CA

R.E.Y. ENGINEERS, INC.
Civil Engineers | Land Surveyors | LiDAR
707 NORTH SHORELINE BOULEVARD
MOUNTAIN VIEW, CA 94043
Phone: (408) 219−3236
SHEET 1 OF 1

22"x34" SHEET, IF SHEET SIZE IS SMALLER, DRAWING HAS BEEN REDUCED.

SHEET TITLE:
INFORMATIONAL SHEET - SEQUOIA FLAT RESTROOM B2

CLIENT:
SAN MATEO COUNTY PARKS
ATTN: MARIO NASTARI
4555 COUNTY CENTER, 4TH FLOOR
REDWOOD CITY, CA 94063
TEL: (650) 363-4020

PROJECT TITLE:
WASTEWATER SYSTEM IMPROVEMENTS
MEMORIAL PARK, 9500 PESCADERO CREEK RD
LOMA MAR, CA 94021

SHERWOOD DESIGN ENGINEERS
1525 Seabright Ave
Santa Cruz, CA 95062
www.sherwoodengineers.com

REGISTERED PROFESSIONAL ENGINEER PETER H. PHIH NO. 055605 EXP. 12/31/20 CIVIL STATE OF CALIFORNIA

DRAWN BY:	JRS
CHECKED BY:	CJC/PHH
DATE:	SEPTEMBER 1, 2020
JOB NO:	19-268
SCALE:	AS SHOWN
SHEET:	WW5.3

UNDERGROUND UTILITY NOTES:

NOT ALL UTILITIES MAY BE SHOWN.
SOME LATERALS WERE NOT ACCESSIBLE & WERE THEREFORE NOT LOCATED.
DEPTHS SHOWN ARE TO CENTER OF CONDUCTIVE UTILITY & ARE GENERALLY +/−10% OF ACTUAL DEPTH, WHEN NOT DISTORTED BY ADJACENT CONDUCTORS. ACCURACY OF ELECTRONIC DEPTH DECREASES WHEN ADJACENT UTILITIES ARE LOCATED WITHIN 5 FT.
CRITICAL DEPTHS REQUIRE VERIFICATION BY POTHOLING.
SANITARY & STORM DEPTHS ARE MEASURED FROM RIM TO INVERT LEVEL.

UTILITY LEGEND:

UTILITY NAME
DIAMETER
0.5SS 4.5
DEPTH

CONTROL POINT TABLE				
POINT	NORTHING	EASTING	ELEVATION	DESCRIPTION
6000	6000.00	6000.00	600.00	WP6000 MAG NAIL SC2
6001	5787.42	6253.34	596.86	WP6001 MAG NAIL SC1
6002	5964.52	6053.24	600.25	WP 6002 MAG NAIL
6003	5876.20	5982.55	595.16	WP6003 60D NAIL
6004	5889.00	5987.46	595.37	WP6004 60D NAIL
6005	5903.07	5909.45	594.53	WP6005 60D NAIL

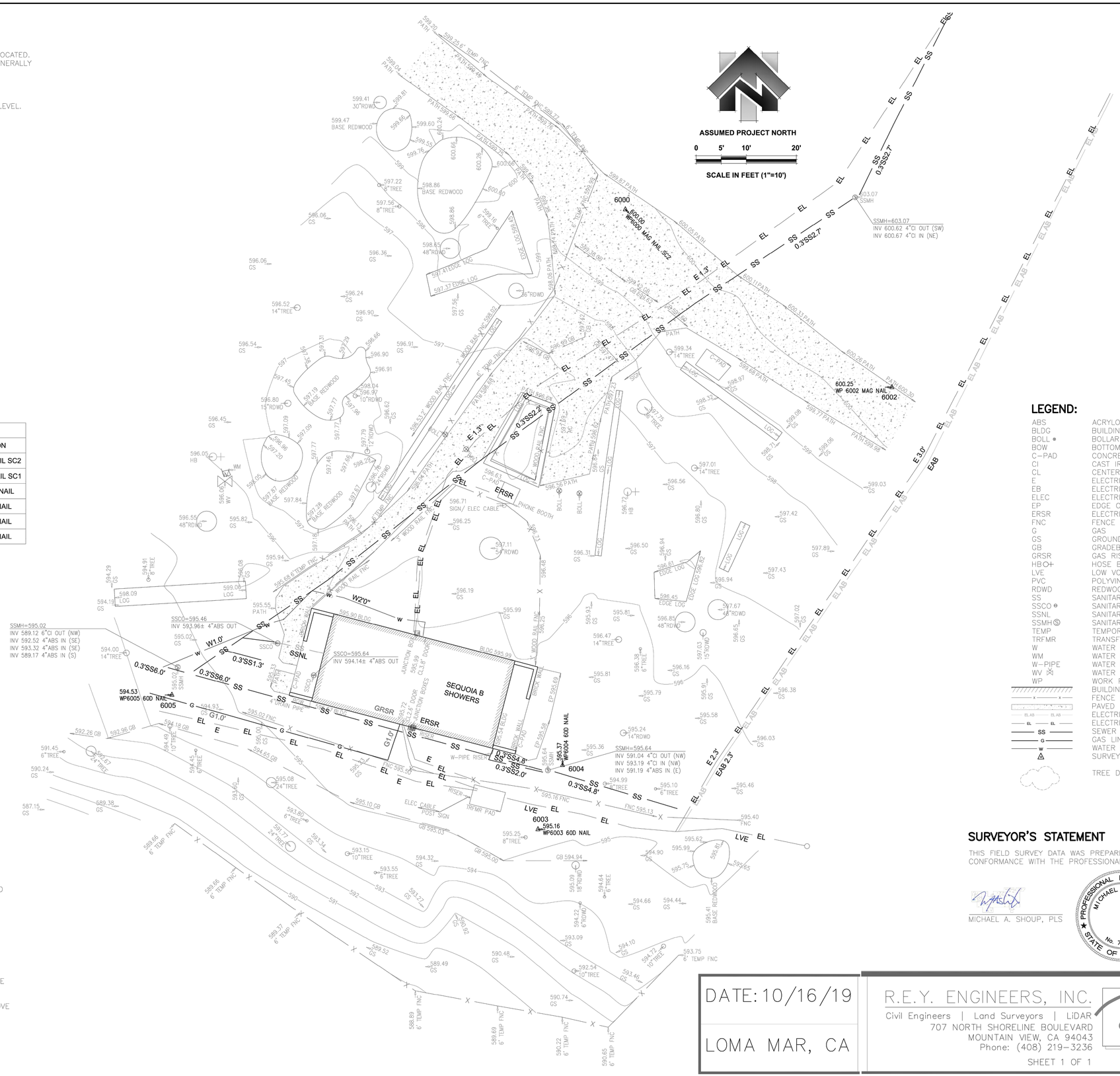

LEGEND:

ABS	ACRYLONITRILE BUTADIENE STYRENE
BLDG	BUILDING
BOLL ●	BOLLARD
BOW	BOTTOM WALL
C−PAD	CONCRETE PAD
CI	CAST IRON PIPE
CL	CENTER LINE
E	ELECTRICAL
EB	ELECTRICAL BOX
ELEC	ELECTRICAL
EP	EDGE OF PAVEMENT
ERSR	ELECTRICAL RISER
FNC	FENCE
G	GAS
GS	GROUND ELEVATION
GB	GRADEBREAK
GRSR	GAS RISER
HB	HOSE BIB
LVE	LOW VOLTAGE ELECTRIC
PVC	POLYVINYL CHLORIDE PIPE
RDWD	REDWOOD TREE
SS	SANITARY SEWER
SSCO ⊖	SANITARY SEWER CLEANOUT
SSNL	SANITARY SEWER LINE NOT LOCATED
SSMH Ⓢ	SANITARY SEWER MANHOLE
TEMP	TEMPORARY
TRFMR	TRANSFORMER
W	WATER
WM	WATER METER
W−PIPE	WATER PIPE
WV	WATER VALVE
WP	WORK POINT
	BUILDING HATCH
	FENCE LINE
	PAVED ROAD
EL AB	ELECTRICAL ABANDONED LINE
EL	ELECTRICAL LINE
SS	SEWER LINE
G	GAS LINE
W	WATER LINE
△	SURVEY CONTROL POINT
	TREE DRIPLINE

SURVEYOR'S STATEMENT

THIS FIELD SURVEY DATA WAS PREPARED UNDER MY DIRECTION IN CONFORMANCE WITH THE PROFESSIONAL LAND SURVEYORS ACT.

MICHAEL A. SHOUP, PLS

PROFESSIONAL LAND SURVEYOR — MICHAEL A. SHOUP — No. 7616 — STATE OF CALIFORNIA

SURVEYOR NOTES:

1. ALL DISTANCES AND DIMENSIONS ARE SHOWN IN FEET AND DECIMALS THEREOF OR UNLESS NOTED OTHERWISE
2. DATE OF FIELD SURVEY: SEPTEMBER 23, 2019
3. COORDINATES ARE ON AN ASSUMED COORDINATES SYSTEM
4. ELEVATIONS ARE ON AN ASSUMED DATUM
5. CONTOUR INTERVAL IS 1 FOOT
6. TREES THAT ARE CLUSTERED OR IRREGULAR IN SHAPE ARE OUTLINED AT GROUND LEVEL
7. TREE DIAMETERS WERE MEASURED AT BREAST HEIGHT ABOVE GROUND

DATE: 10/16/19

LOMA MAR, CA

R.E.Y. ENGINEERS, INC.
Civil Engineers | Land Surveyors | LiDAR
707 NORTH SHORELINE BOULEVARD
MOUNTAIN VIEW, CA 94043
Phone: (408) 219−3236
SHEET 1 OF 1

SHEET TITLE:
INFORMATIONAL SHEET - SEQUOIA FLAT RESTROOM B1

CLIENT:
SAN MATEO COUNTY PARKS
ATTN: MARIO NASTARI
4555 COUNTY CENTER, 4TH FLOOR
REDWOOD CITY, CA 94063
TEL: (650) 363-4020

PROJECT TITLE:
WASTEWATER SYSTEM IMPROVEMENTS
MEMORIAL PARK, 9500 PESCADERO CREEK RD
LOMA MAR, CA 94021

SHERWOOD DESIGN ENGINEERS
1525 Seabright Ave
Santa Cruz, CA 95062
www.sherwoodengineers.com

REGISTERED PROFESSIONAL ENGINEER — PETER H. HUNG — NO. 055605 — EXP. 12/31/20 — CIVIL — STATE OF CALIFORNIA

DRAWN BY:	JRS
CHECKED BY:	CJC/PHH
DATE:	SEPTEMBER 1, 2020
JOB NO:	19-268
SCALE:	AS SHOWN
SHEET:	WW5.4

BASIS OF BEARINGS:

COORDINATES SHOWN HEREON ARE IN TERMS OF NAD83 (2011), EPOCH 2017.50, CALIFORNIA STATE PLANE COORDINATE ZONE 3, BASED LOCALLY UPON TIES TO CALIFORNIA SPATIAL REFERENCE NETWORK STATIONS P219, P220 AND P277.

BASIS OF ELEVATIONS:

ELEVATIONS SHOWN HEREON ARE IN TERMS OF NAVD88, BASED LOCALLY UPON TIES TO CALIFORNIA SPATIAL REFERENCE NETWORK STATIONS P219, P220 AND P277.

SURVEYOR NOTES:

1. ALL DISTANCES AND DIMENSIONS ARE SHOWN IN FEET AND DECIMALS THEREOF OR UNLESS NOTED OTHERWISE
2. DATE OF FIELD SURVEY: MARCH 2, 2020
3. CONTOUR INTERVAL IS 1 FOOT
4. TREES THAT ARE CLUSTERED OR IRREGULAR IN SHAPE ARE OUTLINED AT GROUND LEVEL
5. TREE DIAMETERS WERE MEASURED AT BREAST HEIGHT ABOVE GROUND

0 5' 10' 20'

SCALE IN FEET(1"=10')

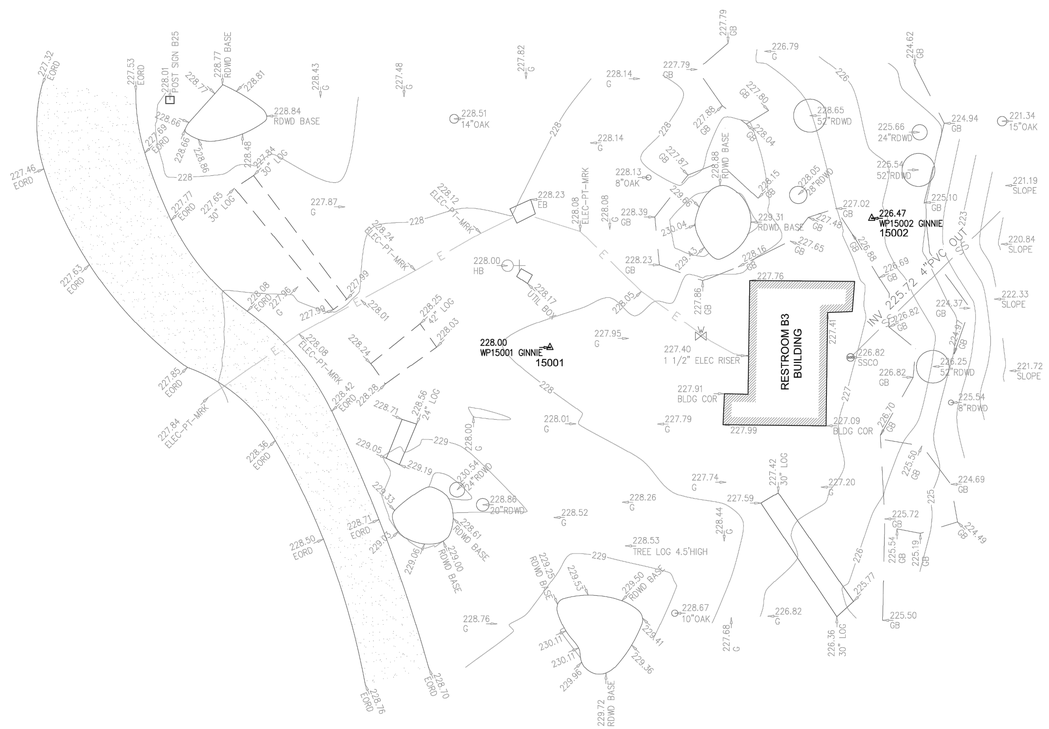

LEGEND:

BLDG	BUILDING
COR	CORNER
EB	ELECTRICAL BOX
ELEC	ELECTRICAL
EORD	EDGE OF ROAD
G	GROUND SPOT
GB	GRADEBREAK
HB	HOSE BIB
INV	INVERT
OAK	OAK TREE
PVC	POLYVINYL CHLORIDE PIPE
PT-MRK	PAINT MARK
RDWD	REDWOOD TREE
SSCO	SANITARY SEWER CLEANOUT
UTIL	UTILITY
WP	WORK POINT
WV	WATER VALVE
	PAVED HATCH
	BUILDING HATCH
	SURVEY CONTROL POINT
E	ELECTRICAL PAINT MARK
SS	SEWER LINE

CONTROL POINT TABLE

POINT	NORTHING	EASTING	ELEVATION	DESCRIPTION
31	1927794.221	6039653.878	229.19	REY 31 MAG
32	1927733.432	6039465.180	222.57	REY 32 60D
15001	1927881.725	6039660.122	228.00	WP15001 GINNIE
15002	1927898.768	6039702.581	226.47	WP15002 GINNIE

SURVEYOR'S STATEMENT

THIS FIELD SURVEY DATA WAS PREPARED UNDER MY DIRECTION IN CONFORMANCE WITH THE PROFESSIONAL LAND SURVEYORS ACT.

MICHAEL A. SHOUP, PLS

PROFESSIONAL LAND SURVEYOR MICHAEL A. SHOUP No. 7616 STATE OF CALIFORNIA

DATE: 3/9/2020

LOMA MAR, CA

R.E.Y. ENGINEERS, INC.
Civil Engineers | Land Surveyors | LiDAR
707 NORTH SHORELINE BOULEVARD
MOUNTAIN VIEW, CA 94043
Phone: (408) 219-3236

SHEET 1 OF 1

22"x34" SHEET. IF SHEET SIZE IS SMALLER, DRAWING HAS BEEN REDUCED.

SHEET TITLE: INFORMATIONAL SHEET - SEQUOIA FLAT RESTROOM B3

CLIENT: SAN MATEO COUNTY PARKS
ATTN: MARIO NASTARI
4555 COUNTY CENTER, 4TH FLOOR
REDWOOD CITY, CA 94063
TEL: (650) 363-4020

PROJECT TITLE: WASTEWATER SYSTEM IMPROVEMENTS
MEMORIAL PARK 9500 PESCADERO CREEK RD
LOMA MAR, CA 94021

SHERWOOD DESIGN ENGINEERS
1525 Seabright Ave
Santa Cruz, CA 95062
www.sherwoodengineers.com

REGISTERED PROFESSIONAL ENGINEER PETER H. HUANG NO. 055605 EXP. 12/31/20 CIVIL STATE OF CALIFORNIA

DRAWN BY:	JRS
CHECKED BY:	CJC/PHH
DATE:	SEPTEMBER 1, 2020
JOB NO:	19-268
SCALE:	AS SHOWN
SHEET:	WW5.5

BASIS OF BEARINGS:

COORDINATES SHOWN HEREON ARE IN TERMS OF NAD83 (2011), EPOCH 2017.50, CALIFORNIA STATE PLANE COORDINATE ZONE 3, BASED LOCALLY UPON TIES TO CALIFORNIA SPATIAL REFERENCE NETWORK STATIONS P219, P220 AND P277.

BASIS OF ELEVATIONS:

ELEVATIONS SHOWN HEREON ARE IN TERMS OF NAVD88, BASED LOCALLY UPON TIES TO CALIFORNIA SPATIAL REFERENCE NETWORK STATIONS P219, P220 AND P277.

SURVEYOR NOTES:

1. ALL DISTANCES AND DIMENSIONS ARE SHOWN IN FEET AND DECIMALS THEREOF OR UNLESS NOTED OTHERWISE
2. DATE OF FIELD SURVEY: MARCH 2, 2020
3. CONTOUR INTERVAL IS 1 FOOT
4. TREES THAT ARE CLUSTERED OR IRREGULAR IN SHAPE ARE OUTLINED AT GROUND LEVEL
5. TREE DIAMETERS WERE MEASURED AT BREAST HEIGHT ABOVE GROUND

LEGEND:

BLDG	BUILDING
CI	CAST IRON PIPE
CL	CENTER LINE
CLF	CHAIN LINK FENCE
COL	COLUMN
COR	CORNER
C–PAD	CONCRETE PAD
EB	ELECTRICAL BOX
ELEC	ELECTRICAL
ENT	ENTRANCE
FL	FLOWLINE
G	GROUND
GB	GRADEBREAK
HDPV	HIGH DENSITY POLYETHYLENE PIPE
INV	INVERT
OHNG	OVERHANG
PT–MRK	PAINT MARK
RCP	REINFORCED CONCRETE PIPE
RDWD	REDWOOD
SS	SANITARY SEWER
SSMH	SANITARY SEWER MANHOLE
TOE	TOE OF SLOPE
TOP	TOP OF SLOPE
WP	WORK POINT
E	ELECTRICAL PAINT MARK
SS	SEWER LINE
	BUILDING HATCH
	SURVEY CONTROL POINT
	CONCRETE HATCH

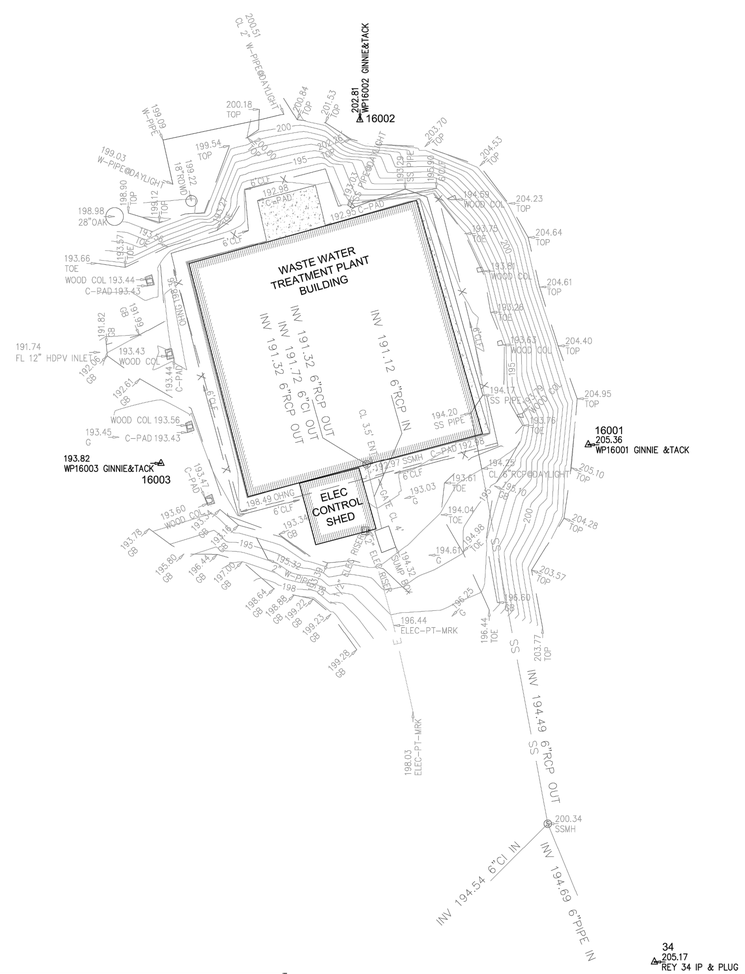

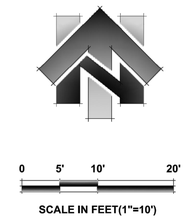

CONTROL POINT TABLE				
POINT	NORTHING	EASTING	ELEVATION	DESCRIPTION
33	1927723.061	6039329.002	212.58	REY 33 H&T
34	1927826.231	6039124.779	205.17	REY 34 IP & PLUG
16001	1927894.456	6039116.040	205.36	WP16001 GINNIE &TACK
16002	1927937.314	6039085.913	202.81	WP16002 GINNIE&TACK
16003	1927891.973	6039059.672	193.82	WP16003 GINNIE&TACK

SURVEYOR'S STATEMENT

THIS FIELD SURVEY DATA WAS PREPARED UNDER MY DIRECTION IN CONFORMANCE WITH THE PROFESSIONAL LAND SURVEYORS ACT.

MICHAEL A. SHOUP, PLS

PROFESSIONAL LAND SURVEYOR MICHAEL A. SHOUP No. 7616 STATE OF CALIFORNIA

DATE: 3/9/2020

LOMA MAR, CA

R.E.Y. ENGINEERS, INC.
Civil Engineers | Land Surveyors | LiDAR
707 NORTH SHORELINE BOULEVARD
MOUNTAIN VIEW, CA 94043
Phone: (408) 219–3236

SHEET 1 OF 1

22 x 34 SHEET. IF SHEET SIZE IS SMALLER, DRAWING HAS BEEN REDUCED.

SHEET TITLE:
INFORMATIONAL SHEET - WWTP R.E.Y.

CLIENT:
SAN MATEO COUNTY PARKS
ATTN: MARIO NASTARI
4555 COUNTY CENTER, 4TH FLOOR
REDWOOD CITY, CA 94063
TEL: (650) 363-4020

PROJECT TITLE:
WASTEWATER SYSTEM IMPROVEMENTS
MEMORIAL PARK, 9500 PESCADERO CREEK RD
LOMA MAR, CA 94021

SHERWOOD DESIGN ENGINEERS
1525 Seabright Ave
Santa Cruz, CA 95062
www.sherwoodengineers.com

REGISTERED PROFESSIONAL ENGINEER PETER H. HUANG NO. 055605 EXP. 12/31/20 CIVIL STATE OF CALIFORNIA

DRAWN BY:	JRS
CHECKED BY:	CJC/PHH
DATE:	SEPTEMBER 1, 2020
JOB NO:	19-268
SCALE:	AS SHOWN
SHEET:	WW5.6

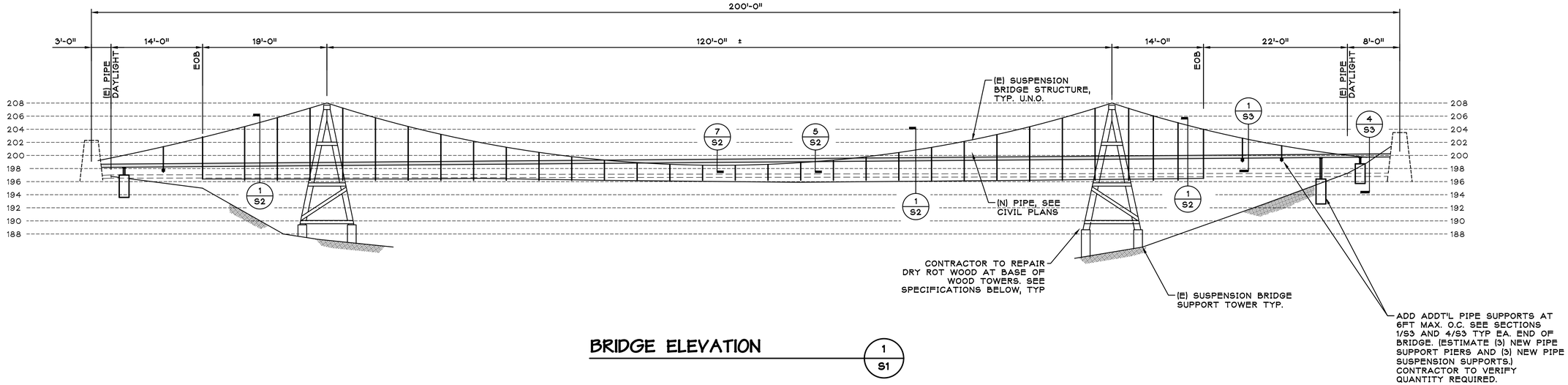

BRIDGE ELEVATION

1
S1

STRUCTURAL NOTES AND SPECIFICATIONS

A. GENERAL

1. THE CONTRACTOR SHALL EXAMINE CAREFULLY THE SITE OF WORK CONTEMPLATED, THE PLANS, AND SPECIFICATIONS; THEREFORE, THE SUBMISSION OF A BID SHALL BE CONCLUSIVE EVIDENCE THAT THE CONTRACTOR HAS INVESTIGATED AND IS SATISFIED AS TO THE CONDITIONS TO BE ENCOUNTERED, THE CHARACTER, QUALITY, AND SCOPE OF WORK TO BE PERFORMED, THE QUANTITIES OF MATERIALS TO BE FURNISHED, AND AS TO THE REQUIREMENTS OF THE PLANS AND THESE SPECIFICATIONS.

2. ALL CONSTRUCTION AND MATERIALS SHALL BE AS SPECIFIED AND AS REQUIRED BY THE LATEST EDITION OF THE CALIFORNIA BUILDING CODE, THE CALIFORNIA BUILDING CODE STANDARDS, AND LOCALLY ENFORCED CODES AND AUTHORITIES. ALL ARTICLES, MATERIALS, AND EQUIPMENT SHALL BE INSTALLED, APPLIED, AND CONNECTED AS DIRECTED BY THE MANUFACTURER'S LATEST WRITTEN SPECIFICATIONS EXCEPT WHERE OTHERWISE NOTED. MATERIAL NOTES ON THE DRAWINGS SHALL TAKE PRECEDENCE OVER THESE SPECIFICATIONS.

3. IN THE EVENT THAT CERTAIN FEATURES OF THE CONSTRUCTION ARE NOT FULLY SHOWN, THEIR CONSTRUCTION SHALL BE AS SHOWN FOR SIMILAR FEATURES. ALL DIMENSIONS SHALL TAKE PRECEDENCE OVER SCALE SHOWN ON THE PLANS.

4. IT SHALL BE THE CONTRACTOR'S SOLE RESPONSIBILITY TO DESIGN AND PROVIDE ADEQUATE SHORING, BRACING, FORMWORK, ETC., AS REQUIRED FOR THE PROTECTION OF LIFE AND PROPERTY DURING CONSTRUCTION.

5. THE CONTRACTOR SHALL EXAMINE AND CHECK ALL EXISTING CONDITIONS, DIMENSIONS, LEVELS, AND MATERIALS AND NOTIFY THE OWNER, CONSTRUCTION MANAGER OR ENGINEER OF ANY DISCREPANCIES BEFORE PROCEEDING WITH THE WORK. SHOULD A DISCREPANCY APPEAR IN THE SPECIFICATIONS OR DRAWINGS, OR IN THE WORK DONE BY OTHERS FROM THE CONTRACT DOCUMENTS, THAT AFFECT ANY WORK, THE CONSTRUCTION MANAGER OR ENGINEER SHALL BE NOTIFIED AT ONCE FOR INSTRUCTIONS ON HOW TO PROCEED. IF THE CONTRACTOR PROCEEDS WITH THE WORK AFFECTED, WITHOUT INSTRUCTIONS FROM THE CONSTRUCTION MANAGER OR ENGINEER, THE CONTRACTOR SHALL MAKE GOOD ANY RESULTING DAMAGE OR DEFECT TO THE SATISFACTION OF THE ARCHITECT OR ENGINEER. SHOULD A CONFLICT OCCUR IN, OR BETWEEN DRAWINGS AND SPECIFICATIONS, OR WHERE DETAIL REFERENCES ON CONTRACT DRAWINGS HAVE BEEN OMITTED, THE CONTRACTOR IS DEEMED TO HAVE ESTIMATED THE MOST EXPENSIVE MATERIALS AND CONSTRUCTION METHOD INVOLVED, UNLESS A WRITTEN DECISION OF THE CONSTRUCTION MANAGER OR ENGINEER HAS BEEN OBTAINED WHICH DESCRIBES AN ALTERNATE METHOD AND/OR MATERIALS.

6. ALL MATERIAL STORED ON SITE SHALL BE PROPERLY STACKED AND PROTECTED TO PREVENT DAMAGE AND DETERIORATION UNTIL USE. FAILURE TO PROTECT MATERIAL MAY BE CAUSE FOR REJECTION OF WORK.

7. THE CONTRACTOR SHALL DO ALL CUTTING, FITTING, OR PATCHING OF HIS WORK THAT MAY BE REQUIRED TO MAKE ITS SEVERAL PARTS FIT TOGETHER PROPERLY, AND SHALL NOT ENDANGER ANY OTHER WORK BY CUTTING, OR OTHERWISE ALTERING, THE TOTAL WORK OR ANY PART OF IT. CONTRACTOR SHALL EXERCISE CARE TO PROTECT ANY EXISTING CONSTRUCTION SO THAT INTEGRITY AND FINISH ARE NOT IMPAIRED. ALL PATCHING, REPAIRING, AND REPLACING OF MATERIALS AND SURFACES, CUT OR DAMAGED IN EXECUTION OF WORK, SHALL BE DONE WITH APPROPRIATE MATERIALS SO THAT THE SURFACES REPLACED WILL, UPON COMPLETION, MATCH SURROUNDING SIMILAR SURFACES.

B. STRUCTURAL OBSERVATION

1. STRUCTURAL ENGINEER SHALL PERFORM STRUCTURAL OBSERVATION AT THE FOLLOWING STAGES OF WORK:

   a. AFTER PIPE SUPPORT FRAMING AND PIPING HAS HAVE BEEN INSTALLED FOR FINAL ACCEPTANCE.

2. CONTRACTOR SHALL CONTACT ENGINEER 48 HOURS MINIMUM PRIOR TO DESIRED TIME OF OBSERVATION.

C. MATERIAL PROPERTIES

1. ALL ALUMINUM PARTS SHALL BE GRADE 6061 - 76

2. ALL FASTENERS SHOWN SHALL BE STAINLESS STEEL GRADE 316.

3. USE STAINLESS STL, GRDE 316, INNER TOOTH LOCK WASHERS w/ S.S. NUTS ON ALL BOLTS.

D. WOOD RESTORATION

1. THERE ARE AREAS OF WOOD DRY ROT IN THE WOOD COLUMNS OF THE EXISTING BRIDGE TOWERS. CONTRACTOR SHALL SCHEDULE A SITE VISIT WITH STREETER GROUP INC. TO DETERMINE EXTENT OF DRY ROT REPAIRS.

2. ABATRON LIQUID WOOD & WOODEPOX PRODUCT SHALL BE USED FOR REPAIR METHOD. FOLLOW ALL MANUFACTURE SPECIFICATIONS FOR THE DRY ROT REPAIR.

3. DRY ROT REPAIR WORK TO BE PERFORMED ON A TIME AND MATERIAL BASIS UNDER A SPECIFIC ALLOWANCE AS INDICATED IN THE DIVISION 0 REQUIREMENTS.

E. CONCRETE

1. POURED IN PLACE CONCRETE WORK SHALL BE CONSTRUCTED OF NORMAL WEIGHT, PORTLAND CEMENT CONCRETE, HAVING A MINIMUM 28-DAY COMPRESSIVE STRENGTH OF 2500 PSI. ALL PORTLAND CEMENT CONCRETE SHALL CONFORM TO THE REQUIREMENTS OF ACI 318, "BUILDING CODE REQUIREMENTS FOR REINFORCED CONCRETE", LATEST EDITION. MAXIMUM CONCRETE SLUMP SHALL BE 4 INCHES. THE USE OF ANY ADMIXTURE IN THE CONCRETE MUST BE APPROVED BY THE ENGINEER.

2. ALL NEWLY PLACED CONCRETE SHALL BE CURED IN ACCORDANCE WITH THE PROVISIONS IN ACI 308, "STANDARD PRACTICE FOR CURING CONCRETE," LATEST EDITION. METHOD OF CURING SHALL BE AT THE OPTION OF THE CONTRACTOR WITH APPROVAL OF THE OWNER.

3. ALL METAL ANCHORAGE DEVICES, ANCHOR BOLTS, ETC. SHALL BE SECURED IN PLACE PRIOR TO PLACING CONCRETE.

4. ALL WORK DONE UNDER THIS SECTION SHALL CONFORM WITH THE APPLICABLE PORTIONS OF ACI 318, LATEST EDITION.

ABBREVIATIONS

AB	Anchor Bolt	(E)	Existing	PLY	Plywood
ABV	Above	EA	Each	PSF	Pounds per Square Foot
ACI	American Concrete Institute	EN	Edge Nailing	PSI	Pounds per Square Inch
		ENGR	Engineer	PTDF	Preservative Treated Douglas Fir
AL	Aluminium	EXT	Exterior		
ALT	Alternate	FLR	Floor	RDWD	Redwood
APA	American Plywood Association	FND	Foundation	REINF	Reinforcement
		FOC	Face of Concrete	REQD	Required
ARCH	Architect	FOS	Face of Stud	RF	Roof
ATR	All Thread Rod	FRMG	Framing	RM	Room
BD	Board	FT	Foot or Feet	RTW	Retaining Wall
BLK(G)	Block(ing)	FTG	Footing	SAD	See Architectural Drawings
BLW	Below	GALV	Galvanized	SB	Solid Blocking
BM	Beam	GL	Glued Laminated	SF	Square Foot
BN	Boundary Nailing	GYP	Gypsum	SIM	Similar
BP	Base Plate	HD	Holdown	SPEC	Specifications
BRG	Bearing	HDR	Header	SQ	Square
CL	Center Line	HORIZ	Horizontal	SS	Stainless Steel
CLG	Ceiling	HSS	Hollow Steel Section	STD	Standard
CLR	Clear, Clearance	HT	Height	STL	Steel
COL	Column	INT	Interior	SKYLT	Skylight
CONC	Concrete	JST(S)	Joist(s)	T&B	Top and Bottom
CONN	Connection	MB	Machine Bolt	T&G	Tongue and Groove
CONT	Continuous	MI	Malleable Iron	TOC	Top of Concrete
CNTR	Center	MIN	Minimum	TOW	Top of Wall
DBL	Double	(N)	New	TR	Threaded Rod
DF	Douglas Fir	OC	On Center	TYP	Typical
DIA	Diameter	OH	Opposite Hand	UBC	Uniform Building Code
DTL	Detail	OPNG	Opening	UNO	Unless Noted Otherwise
DWG	Drawing	PAF	Powder Acctuated Fastener	ø	Diameter
		PL	Plate or Property Line		

REVISIONS	BY
1	
2	
3	
4	
5	
6	

Streeter Group, Inc.
Architecture, Structural Engineering
2571 Main Street, Suite C, Soquel, CA 95073
Phone: (831) 477-1781 www.streetergroup.com

MEMORIAL PARK
LOMA MAR, CALIFORNIA

PROFESSIONAL ENGINEER SCOTT STREETER SE 7024 EXP. 6/21 STATE OF CALIFORNIA

BRIDGE ELEVATION, STRUCTURAL NOTES

DATE: 8-31-20
SCALE: AS NOTED
DRAWN BY:
CHECK BY:
CAD FILE: S1
JOB NO: 20006
SHEET
S1

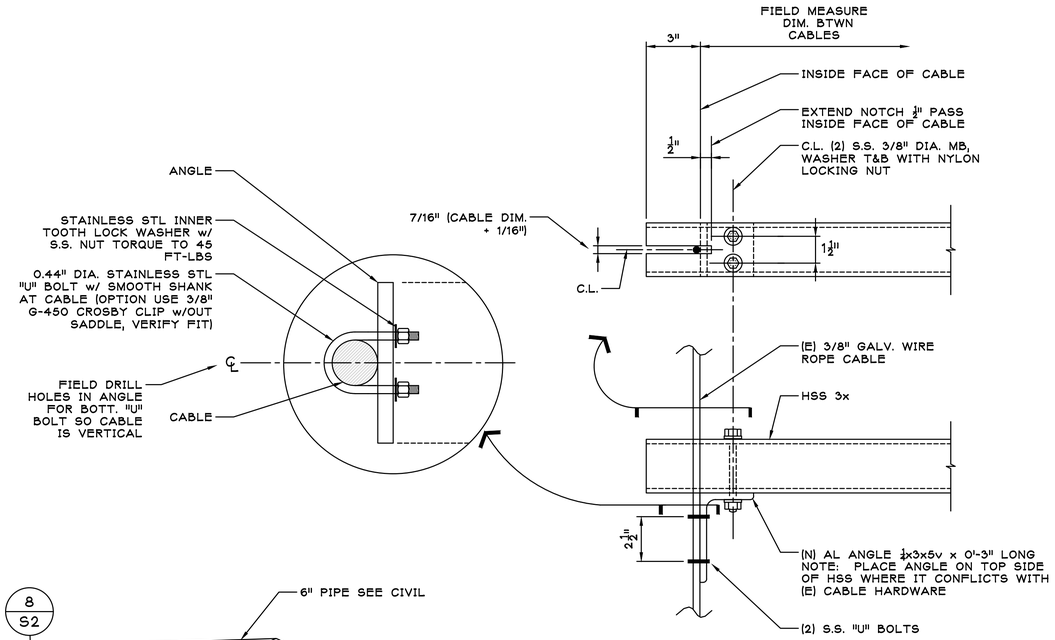

HSS TO CABLE CONN.

d_Detail 3" 4/S2

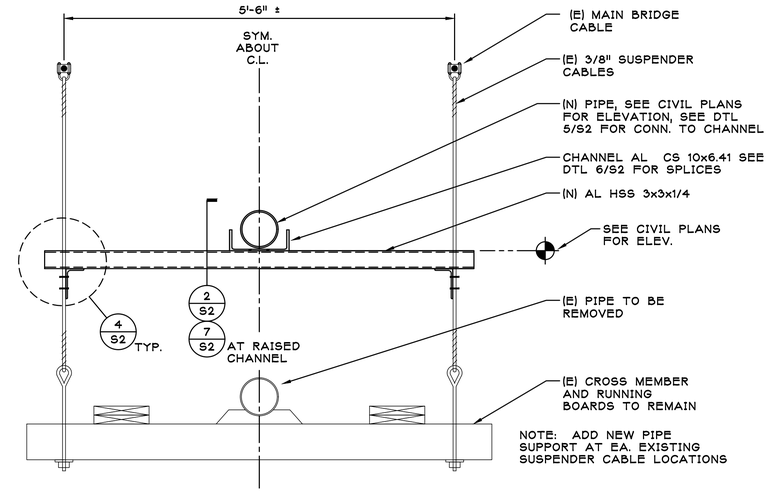

TYPICAL SECTION

d_details 1/S2

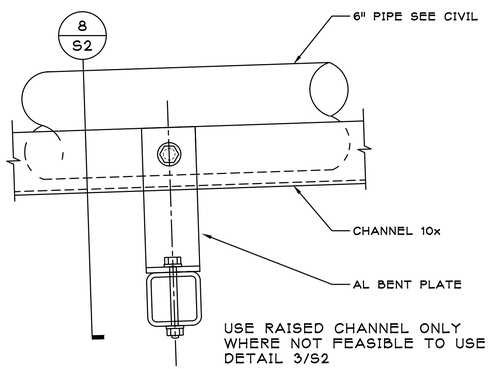

CHANNEL TO HSS CONN.

d_Detail 3" 7/S2

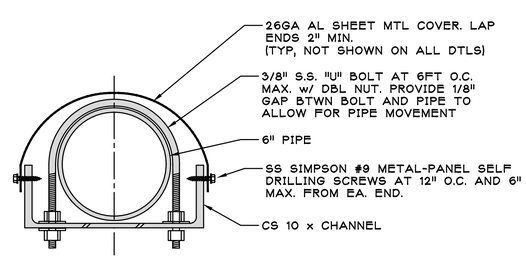

TYP PIPE TO CHANNEL CONN.

d_Detail 3" 5/S2

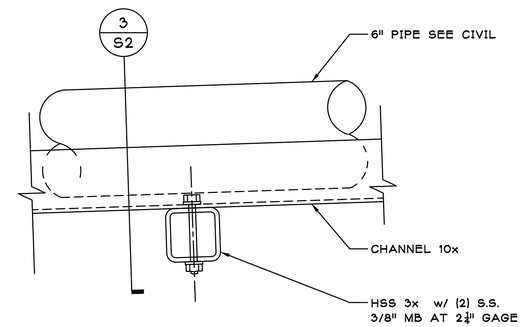

CHANNEL TO HSS CONN.

d_Detail 3" 2/S2

NOTE: CONTRACTOR TO DETERMINE WHERE RAISED CHANNEL SUPPORTS ARE REQUIRED BASE ON FIELD CONDITIONS

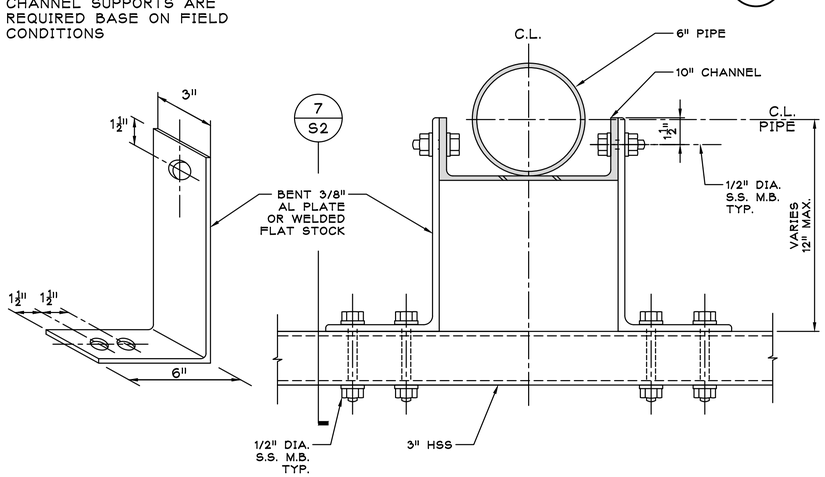

RAISED CHANNEL SUPPORT

d_Detail 3" 8/S2

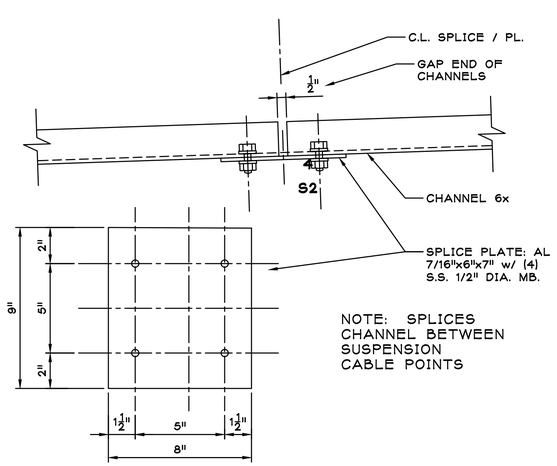

CHANNEL SPLICE

d_Detail 3" 6/S2

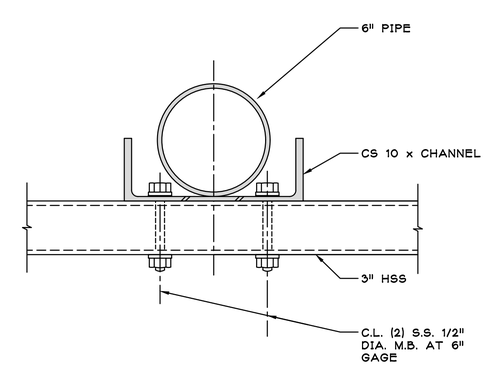

CHANNEL TO HSS CONNECTION

d_Detail 3" 3/S2

REVISIONS	BY
1	
2	
3	
4	
5	
6	

Streeter Group, Inc.
Architecture, Structural Engineering
2571 Main Street, Suite C, Soquel, CA 95073
Phone: (831) 477-1781 www.streetergroup.com

MEMORIAL PARK

LOMA MAR, CALIFORNIA

REGISTERED PROFESSIONAL ENGINEER SCOTT A. STREETER No. 15724 Exp. 6/21 STRUCTURAL STATE OF CALIFORNIA

STRUCTURAL DETAILS

DATE:	8-31-20
SCALE:	AS NOTED
DRAWN BY:	
CHECK BY:	
CAD FILE:	S2
JOB NO:	20006
SHEET	S2

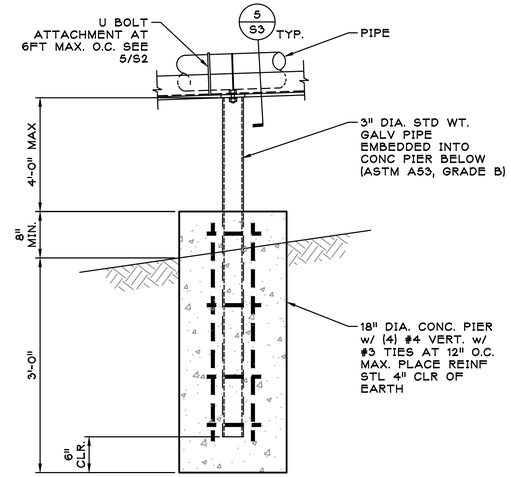

GROUND PIPE SUPPORT (4 / S3)

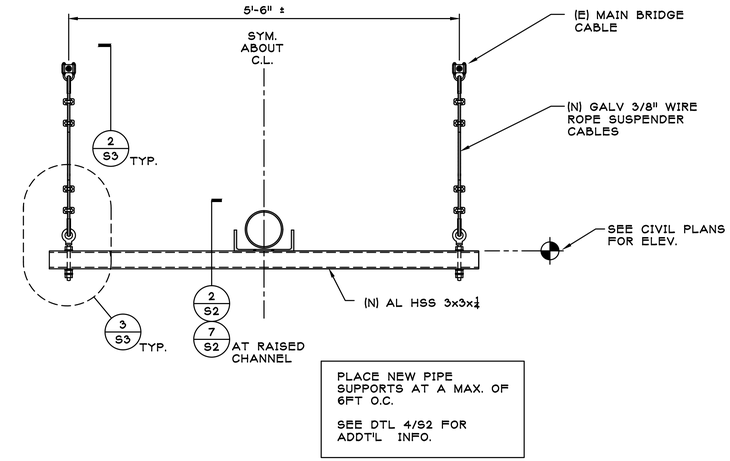

NEW PIPE SUPPORT (1 / S3)

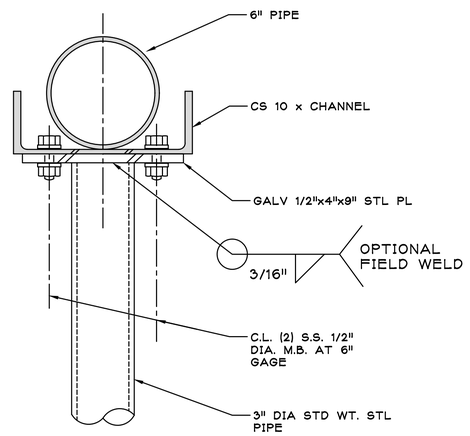

GROUND PIPE SUPPORT (5 / S3)

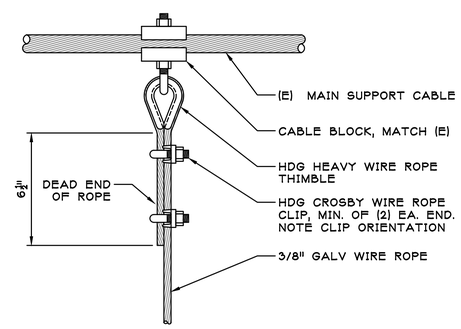

SUSPENSION CABLE CONN. (2 / S3)

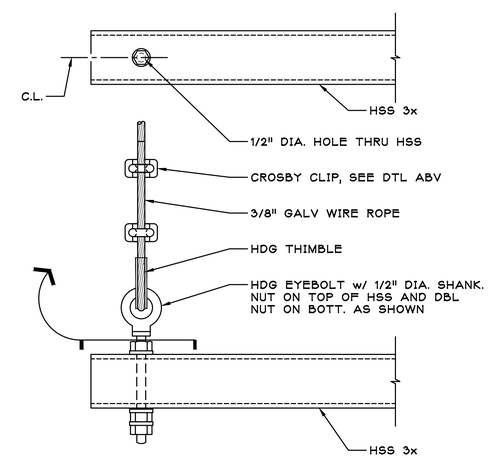

SUSPENSION CABLE TO HSS CONN (3 / S3)

d_Detail 3"

REVISIONS	BY
1	
2	
3	
4	
5	
6	

Streeter Group, Inc.
Architecture, Structural Engineering
2571 Main Street, Suite C, Soquel, CA 95073
Phone: (831) 477-1781 www.streetergroup.com

MEMORIAL PARK

LOMA MAR, CALIFORNIA

DETAILS

DATE:	8-31-20
SCALE:	AS NOTED
DRAWN BY:	XX
CHECK BY:	BSS
CAD FILE:	S3
JOB NO:	20006
SHEET	S3