ENERGY SERVICES AGREEMENT – SOLAR

San Mateo Medical Center

This Energy Services Agreement ("Agreement") is made and entered into as of this _____ day of _____, 2023 (the "Effective Date"), between FFP BTM Solar, LLC, a Delaware limited liability company ("Provider"), and County of San Mateo ("Purchaser"; and, together with Provider, each, a "Party" and together, the "Parties").

RECITALS

A. Purchaser desires that Provider install and operate a solar photovoltaic system at the Premises (as hereafter defined) for the purpose of providing Energy Services (as hereafter defined), and Provider is willing to have the Installation Work performed by using one or more qualified contractors holding the appropriate licenses required in the jurisdiction where the System will be installed;

B. Provider is in the business of designing, constructing, owning, financing, and operating solar photovoltaic systems for the purpose of selling power generated by the systems to its purchasers;

C. California Government Code sections 4217.10 et seq. authorizes a public entity to enter into energy service contracts, facility financing contracts, and related agreements to implement the State's conservation and alternative energy supply source policy;

D. Purchaser's governing body has made those findings required by Government Code section 4217.12 that the anticipated cost to the Purchaser for Energy Services provided by the System under this Agreement is expected to be less than the anticipated marginal cost to the Purchaser of electrical energy that would have been consumed by Purchaser in the absence of its purchase of the Energy Services;

E. Provider and Purchaser acknowledged those certain General Terms and Conditions of Energy Services Agreement between FFP BTM Solar, LLC and Purchaser dated as of June 23, 2022 ("General Termsand Conditions"), which are incorporated by reference as set forth herein; and

F. The terms and conditions of this Energy Services Agreement, excluding the General Terms and Conditions incorporated herein, constitute the "Special Conditions" referred to in the General Terms and Conditions.

In consideration of the mutual promises set forth below, and other good and valuable consideration, the receipt and sufficiency of which are hereby acknowledged, the Parties hereby agree as follows:

Incorporation of General Terms and Conditions. The General Terms and Conditions are incorporated herein as if set forth in their entirety

1. Initial Term. The initial term of this Agreement shall commence on the Effective Date and shall continue for Twenty (20) years from the Commercial Operation Date (as defined in the General Terms and Conditions), unless and until extended or terminated earlier pursuant to the provisions of this Agreement (the "Initial Term"). After the Initial Term, this Agreement may be renewed for additional five (5) year terms (a "Renewal Term"). At least one hundred and eighty (180) days, but no more than three hundred and sixty-five (365) days, prior to the expiration of the Initial Term, Provider shall give written notice to Purchaser of the availability of the Renewal Term. Purchaser shall have sixty (60) days to agree to continuation of this Agreement for the Renewal Term. Absent agreement to the Renewal Term this Agreement shall expire on the Expiration Date. The Initial Term and the subsequent Renewal Term, if any, are referred to collectively as the "Term".

2. Schedules. The following Schedules hereto are hereby incorporated into this Agreement:

Schedule 1	Description of the Premises, System and Subsidy
Schedule 2	Energy Services Payment

Schedule 3	Early Termination Fee
Schedule 4A	Estimated Annual Production
Schedule 4B	Guaranteed Annual Production
Schedule 5	Notice Information
Schedule 6	Site-Specific Information and Requirements
Schedule 7	Scope of Work
Schedule 8	Criteria & Codes
Schedule 9	Submittal & Project Acceptance
Schedule 10	General Electric Specifications
Schedule 11	Photovoltaic System Specifications
Schedule 12	Solar Photovoltaic Roof Structure Mounting Specifications
Schedule 13	Solar Photovoltaic Canopy Structure Specifications
Schedule 14	50% Designs

3. Purchase Requirement; Energy Services Payment. "Energy Services" means the supply of electrical energy output from the System. Purchaser agrees to purchase one hundred percent (100%) of the Energy Services generated by the System and made available by Provider to Purchaser during each relevant month of the Term. While the Energy Services are calculated and billed on a per kWh basis as set forth in Schedule 2 of these Special Conditions, they represent a package of services and benefits.

4. Milestone Dates.

4.1 The Guaranteed 90% Design Date for the Site is 30 business days from NTP.

4.2 The Guaranteed Permit Submission Date for the Site is 15 business days following the Purchaser's written approval of the 100% Design Set.

4.3 The Guaranteed Construction Start Date is 450 calendar days from the NTP, with day for day extensions if the areas of solar development are not available to start System construction and provided that the Local Electric Utility is prepared to begin its construction on any required utility, (distribution or transmission), upgrades, if any.

4.4 The Guaranteed Commercial Operation Date is 250 calendar days after the Construction Start Date, which date may be extended on account of Force Majeure Events or otherwise pursuant to the Agreement.

5. Privacy. Purchaser acknowledges that the System may collect certain information about Purchaser's electricity usage and the System performance. Such information may be stored and processed in the United States or any other country in which Provider or its third-party service providers, or its or their respective affiliates, subsidiaries, or service providers, maintain facilities. Purchaser consents to any such transfer of information outside of Purchaser's country.

6. Net Energy Metering; Liquidated Damages. Provider represents that it intends to comply with the Local Electric Utility customer requirements of all applicable interconnection and net metering agreements and shall not perform any action that would cause Purchaser to breach the terms and conditions of such interconnection agreements with the Local Electrical Utility so as to maintain the effectiveness of such agreements to preserve the Net Energy Metering (NEM) 2.0 grandfathering for the Initial Term. If after Commercial Operation, Provider's negligent or willful actions or omissions cause Purchaser to breach the Purchaser's interconnection agreements, and such breach leads to the permanent loss of NEM 2.0 grandfathering, Provider will compensate the Purchaser the lost monetary value of the grandfathering by crediting the Purchaser on each monthly billing for the duration of the loss of grandfathering as follows:

(a) For loss of NEM 2.0 grandfathering: 10% of the kWh Rate of the Energy Services Payment.

Provided, however, that in the event of a change in Applicable Law that occurs after the Commercial

Operation Date and results in a loss of NEM 2.0 grandfathering, Provider shall have no liability with respect to compensating Purchaser as set forth herein. Provided further that Purchaser shall ensure any correspondence with the Local Electric Utility regarding the tariff and changes to the interconnection agreement are shared with Provider. Purchaser acknowledges that the credit above is Purchaser's sole remedy with respect to such loss.

7. Estimated Annual Production. The annual estimate of electricity generated by the system for each year of the initial term is set as forth in Schedule 4A of the Special Conditions ("Estimated Annual Production").

8. Guaranteed Annual Production. The annual estimate of guaranteed electricity generated by the system for each year ofthe initial term is set as forth in Schedule 4B of the Special Conditions ("Guaranteed Annual Production").

9. Minimum Guaranteed Output. If the System fails to generate the Guaranteed Annual Production for a full Term Year (such amount, the "Minimum Guaranteed Output"), otherthan as a result of the acts or omissions of Purchaser or the Local Electric Utility (including a Disruption Period), or an Event of Force Majeure, Provider shall credit Purchaser an amount equal to Purchaser's Lost Savings (as calculated below) on the next invoice or invoices issued during the following Term Year. The formula for calculating Lost Savings for the applicable Term Year is as follows:

Lost Savings = (MGO *WPR – AE) x RV

MGO = Minimum Guaranteed Output, as measured in total kWh, for System for the applicable Term Year.

WPR = Weather Performance Ratio, measured as the ratio of the actual insolation over typical (pro-forma) insolation shall only apply if the ratio is less than 1.00.

AE = Actual Electricity, as measured in total kWh, delivered by the System for the Term Year.

RV = (ATP – kWh Rate)

ATP = Average tariff price, measured in $/kWh, for the applicable Term Year paid by Purchaser with respect to the Premises. ATP with respect to the System under this Agreement shall be in accordance with the following schedule.

Term Year	ATP ($/kWh)	Term Year	ATP ($/kWh)
1	$0.1700	11	$0.2285
2	$0.1751	12	$0.2353
3	$0.1804	13	$0.2424
4	$0.1858	14	$0.2497
5	$0.1913	15	$0.2571
6	$0.1971	16	$0.2649
7	$0.2030	17	$0.2728
8	$0.2091	18	$0.2810
9	$0.2154	19	$0.2894
10	$0.2218	20	$0.2981

kWh Rate = the kWh Rate in effect for the applicable Term Year, measured in $/kWh.

Lost Savings Cap = System size (DC) as installed in megawatts, multiplied by $27,000. For the avoidance of doubt, the Lost Savings Cap is applicable to each Term Year.

If the RV is zero or less, then no Lost Savings payment shall be due to Purchaser. Such payment for any Lost Savings shall be made by Provider no later than sixty (60) days after the end of the Term Year during which such Lost Savings occurred (or following the date of termination, in the event of an early termination of this Agreement).

10. Allowed Disruption Time. Notwithstanding the provisions in Section 4.3 of the General Terms and Conditions to the contrary, during the initial Term, Purchaser shall be afforded two (2) periods annually which may be used consecutively or in separate periods of at least twelve (12) hours each ("Allowed Disruption Time") during which the System shall be rendered non-operational. Purchaser shall not be obligated to make payments to Provider for electricity not received during the Allowed Disruption Time, nor shall Purchaser be required to reimburse Provider for any other lost revenue during the Allowed Disruption Time, including any lost revenue associated with any reduced sales of Environmental Attributes, and Provider shall be credited for the estimated lost production the System would have produced during such Allowed Disruption Time toward satisfaction of its Minimum Guaranteed Output, as set forth in Section 8 of the Special Conditions, such estimated lost production to be calculated in the same manner as set forth in Section 4.3 of the General Conditions.

11. Sunlight Access. Purchaser will take all reasonable actions as necessary to prevent other buildings, structures or flora from overshadowing or otherwise blocking access of sunlight to the System.

12. Use of System. Purchaser will not use electrical energy generated by the System for the purposes of heating a swimming pool within the meaning of Section 48 of the Internal Revenue Code.

IN WITNESS WHEREOF and in confirmation of their consent to the terms and conditions contained in this Agreement and intending to be legally bound hereby, Provider and Purchaser have executed this Agreement as of the Effective Date.

PROVIDER:
FFP BTM SOLAR, LLC

By:_____
Name: Yumitake Furukawa
Title: Vice President

In witness of and in agreement with this Agreement's terms, the parties, by their duly authorized representatives, affix their respective signatures:

COUNTY OF SAN MATEO

By:
President, Board of Supervisors, San Mateo County

Date:

ATTEST:

By:
Clerk of Said Board

SCHEDULES

Schedule 1 – Description of the Premises, System and Subsidy

A. Premises	**222 W 39TH AVENUE, SAN MATEO, CA 94403**
Site diagram attached:	X Yes ☐No
B. Description of Solar System	Behind the meter, net energy metering, roof-mounted and canopy solarstructures as further detailed in Schedules __.
Solar System Size:	637.45 kW (DC) (this is an estimate (and not a guarantee) of the Systemsize; Provider may update the System Size prior to the Commercial Operation Date.)
C. Anticipated Subsidy or Rebate	$0.00

Schedule 2 – Energy Services Payment

Purchaser shall pay to Provider a monthly payment (the "Energy Services Payment") for the Energy Services provided by the System during each calendar month of the Term equal to the product of (x) Actual Monthly Production for the System for the relevant month multiplied by (y) the kWh Rate.

The "Actual Monthly Production" means the amount of energy recorded by Provider's metering equipment during each calendar month of the Term.

The kWh Rate with respect to the System under this Agreement shall be in accordance with the following schedule:

Term Year	kWh Rate ($/kWh)	Term Year	$/kWh Rate ($/kWh)
1	$0.2013	11	$0.2013
2	$0.2013	12	$0.2013
3	$0.2013	13	$0.2013
4	$0.2013	14	$0.2013
5	$0.2013	15	$0.2013
6	$0.2013	16	$0.2013
7	$0.2013	17	$0.2013
8	$0.2013	18	$0.2013
9	$0.2013	19	$0.2013
10	$0.2013	20	$0.2013

Distribution Upgrades. Within thirty (30) days of receipt of notice from the Local Electric Utility of distribution upgrade costs required by the Local Electric Utility, Purchaser will provide written notice (email is acceptable) to Provider of Purchaser's election of one of the following options:

a. Purchaser will bear all of the reasonably documented scope change costs, and the kWh rate as stated in Table 1 will remain unchanged.
b. For every $0.01 per watt DC of such costs, the kWh rate in Table 1 will increase $0.00065 per

kWh.

Scope Changes (ITC Eligible). If changes in project scope occur that are eligible for the Federal Investment Tax Credit (including but not limited to adverse geotechnical conditions, changes to scope of work to be completed by Purchaser's contractors, or the inclusion of spare conduit) and the costs directly related such changes go beyond those contemplated as part of the development and implementation of the System in this Agreement, Provider will provide documentation demonstrating the direct and actual time and materials costs relating to such costs to Purchaser as defined in this Document. Within thirty (30) days after Purchaser receives such documentation, Purchaser willprovide written notice to Provider of Purchaser's election of one of the following options:

c. Purchaser will bear all of the reasonably documented scope change costs, and the kWh rate as stated in Table 1 will remain unchanged.
d. For every $0.01 per watt DC of such costs, the kWh rate in Table 1 will increase $0.00055 per kWh.Provider shall then be responsible for all associated costs and payments.

Scope Changes (Non-ITC Eligible). If changes in project scope occur that are not eligible for the Federal Investment Tax Credit (including but not limited to distribution upgrade costs required by the Local Electric Utility, ADA compliance costs not related to System configuration or construction) and the costs directly related such changes go beyond those contemplated as part of the development and implementation of the System in this Agreement, Provider will provide documentation demonstrating the direct and actual time and materials costs relatingto such costs to Purchaser as defined in this Document. Within thirty (30) days after Purchaser receives such documentation, Purchaser will provide written notice to Provider of Purchaser's election of one of the following options:

a. Purchaser will pay the entire amount of such associated costs, and the kWh rate as stated in the PPA Rate Table will remain unchanged.
b. For every $0.01 per watt DC of such associated costs, the kWh rate in the PPA Rate Table will increase $0.00065 per kWh, Provider shall then be responsible for all associated costs and payments.

Schedule 3 – Early Termination Fee

The Early Termination Fee with respect to the System under this Agreement shall be calculated in accordance with the following:

Early Termination Occurs in Year:	Column 1 Early Termination Fee where Purchaser does not take Title to the System ($/Wdc including costs of removal)	Purchase Date Occurs on the 91st day following: (Each "Anniversary" below shall refer to the anniversary of the Commercial Operation Date)	Column 2 Early Termination Fee where Purchaser takes Title to the System ($/Wdc, does not include costs of removal)
1*	$5.87		--
2	$4.41		--
3	$4.11		--
4	$3.92		--
5	$3.77		--
6	$3.62	5th Anniversary	$3.12
7	$3.53	6th Anniversary	$3.03
8	$3.48	7th Anniversary	$2.98
9	$3.43	8th Anniversary	$2.93
10	$3.37	9th Anniversary	$2.87
11	$3.32	10th Anniversary	$2.82
12	$3.26	11th Anniversary	$2.76
13	$3.20	12th Anniversary	$2.70
14	$3.14	13th Anniversary	$2.64
15	$3.07	14th Anniversary	$2.57
16	$3.00	15th Anniversary	$2.50
17	$2.93	16th Anniversary	$2.43
18	$2.86	17th Anniversary	$2.36
19	$2.78	18th Anniversary	$2.28
20	$2.70	19th Anniversary	$2.20

At Expiration (the end of the Initial Term), the amount in Column 1 shall be deemed to be zero (0).
*Includes Early Termination prior to the Commercial Operation Date.

Schedule 4A– Estimated Annual Production

Estimated Annual Production commencing on the Commercial Operation Date with respect to System under this Agreement shall be as follows:

Term Year	Estimated Production (kWh)	Term Year	Estimated Production (kWh)
1	1,005,500	11	956,341
2	1,000,473	12	951,560
3	995,470	13	946,802
4	990,493	14	942,068
5	985,540	15	937,357
6	980,613	16	932,671
7	975,710	17	928,007
8	970,831	18	923,367
9	965,977	19	918,750
10	961,147	20	914,157

The values set forth in the table above are estimates (and not guarantees), of approximately how many

kWhs are expected to be generated annually by the System assuming the System size indicated in Schedule 1 and based on initial System designs. Provider may deliver to Purchaser an updated table on or about the Commercial Operation Date based on the actual System size and design.

Schedule 4B – Guaranteed Annual Production

Guaranteed Annual Production commencing on the Commercial Operation Date with respect to System under this Agreement shall be as shown in the table below.

Term Year	Guaranteed Production (kWh)	Term Year	Guaranteed Production (kWh)
1	904,950	11	860,707
2	899,080	12	856,404
3	895,923	13	852,122
4	891,444	14	847,861
5	886,986	15	843,622
6	882,551	16	839,404
7	878,139	17	835,207
8	873,748	18	831,030
9	869,379	19	826,875
10	865,032	20	822,741

The values in the in the table above shall represent 90% of the P50 production estimate based on Provider's as-built design production models. P50, as used herein, means the 50% probability that the Actual Electricity for such Term Year will be at least the as-built design production for such Term Year. Provider may deliver to Purchaser an updated table on or about the Commercial Operation Date based on the actual System size and design.

Schedule 5 – Notice Information

Purchaser:

County of San Mateo
555 county center floor 2, Redwood City, CA 94063
(650) 369-4715
slin@smcgov.org

Provider:

c/o Forefront Power, LLC
Attn: Director, Energy Services
100 Montgomery St., Suite 725
San Francisco, CA 94104

With a copy to

c/o Forefront Power, LLC
Attn: Legal Department
100 Montgomery St., Suite 725
San Francisco, CA 94104
Email: FPLegal@forefrontpower.com

Financing Party:
[To be provided by Provider when known]

Schedule 6 – Site Specific Information and Requirements

In accordance with Section 7.2(f) of the General Terms and Conditions, the following information references any known restrictions on the use of the Premises for the construction, ownership, use and operation of the System, including any land use restrictions, known underground structures or equipment, or limitations arising under permits or applicable law, as well as any additional Environmental Documents, reports or studies in the possession or control of the Purchaser, which shall each have been delivered to Provider as of the Effective Date:

Type of Information	Information Delivered to Provider as of the Effective Date
Building Design Plan Sets	1. PG&E and MSB Conduits as - built - https://drive.google.com/file/d/1JuWeOB1iUGK6i5QalXnlYQpTJykHcSvg/view?usp=drive_link 2. Security camera Schematic sketch - https://drive.google.com/file/d/1y0DQw9Qp3U_kwvfCiD3e5aPgNOr7kzJm/view?usp=drive_link 3. Electrical MSB switch gear submittals - https://drive.google.com/file/d/13i-FolDRlvhLKAbEPtBrNewOszl8qBlR/view?usp=drive_link 4. Reference roofing submittal (Note: Link Building roofing submittal not yet completed. Expected to be the same material

	as the reference submittal) - https://drive.google.com/file/d/1U7B1RPoS0qHxo0UrYK2I_ww-bkDhEiFn/view?usp=drive_link 5. PG&E Interconnection application (sent May 10, 2022) - https://drive.google.com/file/d/1UCc1nP7JPk9qpRVkd96KUL35apVp-o60/view?usp=drive_link 6. SageEnergy Single Line for Interconnection Application (sent May 10, 2022) - https://drive.google.com/file/d/1bGFw9bs5yFwmX79_BVHIAQ1rGE_iR0Ks/view?usp=drive_link 7. Existing Solar Systems as-built documentation - https://drive.google.com/file/d/11gr1ISHp5rPB_ALeUf6ehwSN3xzVBGH8/view?usp=drive_link 8. Admin roof feeders to the MSB (sent on June 1, 2022) - https://drive.google.com/file/d/1lQcCcAI-_--TN2r-TgcUy4ioaRoj5yR6/view?usp=drive_link 9. Summary of conduit infrastructure provided by the purchaser - https://drive.google.com/file/d/1wMqaXz6nWvVVauPDOiH6UhyKqB8xXLGv/view?usp=drive_link 10. Tree canopy clearance instructions (sent on August 17, 2022) - https://drive.google.com/file/d/1UeyVld7KO9hLvtBslRmemJHxo1a_AG3m/view?usp=drive_link 11. Existing retaining wall footing information - https://drive.google.com/file/d/17W5HNe5NJ_nfNmc5jCW6WCxtSxWNqZJJ/view?usp=drive_link 12. Admin Building Drawings – https://drive.google.com/drive/folders/1u7FonibxkDFSEFH3nFM2rwHWiPYWOgrJ?usp=drive_link 13. Link Building Drawings – https://drive.google.com/drive/folders/1NUhSPl2h-zRNNlQ0S7veBig-L4W5yRbN?usp=drive_link 14. Site Work Drawings – https://drive.google.com/drive/folders/13q_9i7mXdz4VvpVCe3zj79b1EccSqEOX?usp=drive_link

	15. PGE&E Pad Drawings – https://drive.google.com/drive/folders/1oGGvbzNTbMdLRWZoYzBH0OihGRPk35p9?usp=drive_link 16. Site Photometrics - https://drive.google.com/file/d/1fHyfHcZ2F7Y-OxZPtoGkLtOo2_Nk-dTz/view?usp=drive_link 17. Updated site work ASI #005 CADs - https://drive.google.com/drive/folders/1U29BXCFQTakuMNcqtmkGwfkTMZoa_Y8O?usp=drive_link
Phase I environmental site assessment	https://drive.google.com/file/d/1DjYzZ36OpLgsjWaM4zD9OUf-7aV5UMdk/view?usp=drive_link
Reports on site sampling (soil or groundwater)	https://drive.google.com/file/d/1b1qD_0obTIm2m-SyRcWvdKtkrEmh6jKW/view?usp=drive_link Sent on June 13, 2022
Land use restrictions imposed by governmental authorities	Not Applicable

Type of Information	**Information Delivered to Provider as of the Effective Date**
Lease restrictions on proposed solar installation	Not Applicable
Cleanup plan, corrective action plan or permits applicable to Premises	Not Applicable
Open spill reports or unresolved release reports	Not Applicable
Known underground storage tanks, foundations, utilities	Site Composite Utility Plan - https://drive.google.com/file/d/1y0DQw9Qp3U_kwvfCiD3e5aPgNOr7kzJm/view?usp=drive_link
Utility easements or public rights of way	Property Line Survey (sent on May 23, 2023) - https://drive.google.com/file/d/1kZhE-DxK2Zyae8d1YCb6_9TwKKGCdEP0/view?usp=drive_link
Completed closure or “cap” on buried waste or other materials	Not Applicable
Systems in place for extracting and collecting methane, groundwater or leachate	Not Applicable

Subject to the control of a trustee, group of entities or entities other than landlord and/or Purchaser	Not Applicable

Schedule 7 – Scope of Work

Project Scope

Key deliverables and milestones of each scope element shall include but not be limited to:

I. FUNDING

1. For a Power Purchase Agreement (PPA) Contract, provide complete procurement, construction and operational phase funding per the approved and executed Contract, resulting in no capital cost to the Purchaser.

II. DESIGN PHASE

1. **Preliminary design** of the PV systems to meet the targeted forecasted electrical production at each site or to the maximum system size limits allowed by the footprint available or to an agreed-upon size with the Purchaser. Sizing shall include accurate and detailed modeling of system production for each specific site based on shading, available tariffs and other site constraints using industry standard modeling tools. The goal is to meet Purchaser's requirements for LEED Silver criteria. Preliminary design shall include plans, design criteria and a brief description of thePV system sufficient for presentation and discussion with the Purchaser.
2. **Detailed design and complete construction drawings** of the PV systems and all ancillary work sufficient for permitting and construction. Drawings must fully describe all aspects of the construction work including fencing (if applicable), directional boring/trenching, excavations, elevated racking and mounting systems, electrical systems, signage, foundations, lighting, ADA, access, etc. Firm will provide Electrical, Structural and all other required engineers of record to provide a complete, stamped drawing set as required to permit and construct a complete photovoltaic Project. The electrical construction drawings shall show and include all conduit below and above finished grade/finish, single-line-diagram showing, but not limited to, the interconnection of the PV system, etc. All plans and specifications must be reviewed and approved by Project Development Unit of Purchaser of San Mateo before submitting for approval by Purchaser's building/planning, and any other Local Authority(ies) Having Jurisdiction (AHJs) over Project.
3. **All permitting and permitting fees** required to complete the project with the exception of CEQA. The Purchaser is the lead agency for CEQA permitting. Provider must support the Purchaser in preparing CEQA documentation, adhere to CEQA requirements, and implement all CEQA mitigation identified by the Purchaser.

III. CONSTRUCTION PHASE

1. **Installation** of all equipment necessary for a complete, interconnected and operational solar PV system, including, but not limited to:
    - Solar PV modules, including modules where noted
    - Inverters
    - Interconnection to the existing switchgear including line-side connection. All electrical connectors, cabling & components necessary for a complete solar system
    - Coordination with the Purchaser and Purchaser's agents for electrical service shut down. Provider shall take all reasonable efforts to minimize the quantity and duration of

electrical service shutdown(s). Any disruption to the electrical service should occur during the weekend or after hours to limit the impact to the occupied building.

- All mounting systems, including canopy structures, ground or roof mount as applicable
- All monitoring equipment necessary to remotely access and download real-time and historical PV energy production, with capability to provide reporting sufficient for WREGIS REC registration, and to remotely access and download real-time and historical site energy consumption data. Historical data on 15-minute interval shall be readily available for the full operating history of the PV system.
- Any balance of system items for a complete, interconnected and operational solar PV system
- All lighting, security or other ancillary equipment described in the contract documents
- Installation of modules and appropriate racking systems, in areas of public rooftop, as detailed in design drawings, with understory of modules clean and aesthetically suitable.

2. **Battery Energy Storage System (BESS)**Provider: N/A
3. **Utility interconnection applications**, including tariff change requests, processing costs and coordination with the local utility-companies such as PG&E necessary to achieve interconnect and permission to operate.
4. Safety. Provide safety officer onsite to assure site safety at all time. All incidents shall be properly investigated, reported and documented.
5. Coordinate and schedule **weekly project meetings** from Notice to Proceed (NTP) through project closeout with all stakeholders. Provider to maintain formal meeting minutes and 'three week look-ahead' schedule and distribute to all attendees within 48 hours from the meeting and an updated master project schedule each month. Frequency of meetings are allowed to change upon the stakeholder availability and approval from the Purchaser.
6. **Coordination** with and support of inspectors, the Purchaser, Architect, Design and Construction subProviders and their consultants during design, construction, commissioning and close-out. Coordination with on site contractor Truebeck Construction Inc. and facility staff. The existing buildings are operational and construction activities are ongoing. There is very limited parking and all deliveries, access, material staging etc. will need to be coordinated between Provider and the existing building staff/construction teams. All PV construction personnel will need to attend the Truebeck Construction Inc. safety training. Truebeck Construction Inc. Senior Super intendant is main authority on site to oversee all construction activities and will need to approve any requested material staging. Provider is responsible to coordinate and schedule all inspections with AHJ 4Leaf. Inspections are not to be scheduled on Fridays to the greatest extent possible.
7. **Project Commissioning**, including all associated tasks and documentation related to successfully commissioning the system. Commissioning shall include assisting any third-party commissioning agents/inspectors with their process and providing documentation as requested.
8. Final PV **"as-built" Construction Documents** clearly conformed with all changes during construction.
9. Provision of a comprehensive **Operations & Maintenance Manuals** for each installed system, per requirements listed in Schedule 9.
10. Conduct a **training** for Purchaser staff, with orientation to the Operations & Maintenance Manuals,systems and safety procedures. Trainings are to be video recorded.
11. **Secure storage** facility at job Site for all PV system equipment and supplies, including any required

security.

12. Legal **toilet and hand wash** sink facilities at job Sites.
13. **Daily cleanup** to "broom clean" conditions.
14. Return disturbed areas to **pre-construction conditions** including repair of all damaged pavement/concrete, restriping, landscape restoration, irrigation restoration, equipment track marks & scuffs on finished concrete surfaces and removal of USA markings.
15. Installation of Purchaser-approved **project information signage** and removal at completion of project.
16. **Project closeout**, inclusive of obtaining AHJ "closed and certified" status for all project-associated AHJ applications.

IV. OPERATIONAL PHASE

1. All Providers must offer a comprehensive **onsite training,** and supporting documentation, to facility staff in PV system operations, safety and maintenance consistent with the System Warranty, Performance Guarantee and O&M contract provisions.

1. An Annual Report that details the following:
   - Annual production in kWh
   - Total energy produced to date in kWh in comparison to pre-solar energy consumption
   - Significant issues encountered and mitigation measures taken
   - Maintenance performed during that year for each individual PV system
   - Actual Performance compared with estimated performance, performance guarantee, and any true-up period accounting
2. Work sites and adjacent areas are to be cleaned of debris and left in an orderly fashion. All improvements made in constructing the System are to be maintained.
3. O&M personnel must maintain safe operating conditions, wear identifying clothing, check-in with site personnel prior to commencing work, and minimize impact on Purchaser activities.
4. Throughout the Term, Provider shall at all times comply with the Local Electric Utility customer requirements of all applicable interconnection and net metering agreements so as to maintain the effectiveness of such agreements to preserve the prevailing Net Energy Metering (NEM) agreement for a full 20 years from the date of Permission to Operate (PTO) from the Local Electric Utility. Provider shall not perform any action that would result in the breach of the terms and conditions of such agreements

V. PROVIDER CONSTRUCTION MILESTONES

Site(s)	Design Complete, Package Submitted	Permit Received	Construction Start	Substantial Completion	Final Completion
San Mateo Medical Center Project - Roofs	Dec-23	Apr-24	Mar-25	June-25	July-25
San Mateo Medical Center Project - Canopies	Dec-23	Apr-24	Unground Nov-24 Steel and panels – Dec- 24	Mar - 25	July - 25

Schedule 8 – Criteria & Codes

I. GENERAL CRITERIA

1. All Project construction is to be completed in accordance with the final Construction Schedule, mutually agreed to by both Parties and appended hereto.
2. The Purchaser shall be responsible for specifying and conducting tree removal and/or trimming as needed to meet production guarantee of PV system arrays Purchaser is responsible for any ongoingtree trimming as needed to ensure the systems meet the performance guarantees.
3. Provider shall notify the Purchaser in writing of any proposed change orders (PCO), requests for information (RFI), or construction change directives (CCD), with all supporting information regarding the RFIs or changes that impact the System energy production or physical appearance. At minimum, the Provider must detail for hours (using union/DIR rates), equipment rental (using CalTran rates), insurance/bonds breakdown, and profit/overhead (not exceeding 15% including the sub tiers). Purchaser shall have 10 business days to respond to all PCOs, RFIs, or CCDs. Provider shall take all liability and pay all costs for any work performed in relation to a PCO, RFI, or CCD without written approval of Purchaser.
4. The Provider shall coordinate site access through all phases of the project with key stakeholders and Purchaser identified staff at least 24 hours prior to any personnel arriving on site. All deliveries, access needs, material staging must be approved by General Contractor as they are responsible for maintaining site security and site logistics. The Provider shall coordinate with and provide access and support to all inspectors, Purchaser staff or consultants during testing and inspections of all systems. Exclusive of local ordinances, Site access and logistics is the responsibility of Truebeck Construction Inc. and all access requirements, material staging, parking, etc must be coordinated with the project's general contractor. Due to construction workers on site for new building construction and the existing building being fully operational, there is very limited local parking or staging areas. Access to the electric utility meter and utility lockable disconnect will be provided upon request. No new access roads are planned; however, should the need arise, Purchaser and Provider shall agree upon reasonable accommodations and compensation. Purchaser to permit using on site water and power as available for construction at no charge to Provider, with the exception of fire hydrants. Use of generators must be approved by the AHJ prior to on site use., subject to BAAQMD and local ordinances.
5. The Provider shall coordinate closely with the Purchaser to ensure all construction activities minimizeimpact on operations and events at the sites. Construction fencing shall enclose entire work area if applicable.
6. Access during regular weekday working hours. The General Contractor is responsible for site security and site access. All access requirements must be coordinated and approved by General Contractor.
7. Provider is responsible for on-site installation supervision throughout the duration of the project.
8. Where applicable, all active work areas must be fenced off from start of work at that area until completion or until area is safe for entry, whichever is longer. Temporary fencing and access control layouts shall be submitted to the Purchaser and approved for each site prior to commencing construction where applicable. Temporaryfencing shall also be installed to protect trees and vegetation adjacent to work areas from construction damage where applicable. Fencing is not required on roof installations.
9. Provider is to meet applicable codes and specifications with regard to dust during construction and

seek to minimize dust migration from the construction site.

10. Provider acknowledges that adjacent facilities will remain in operation during all or a portion of the Work, and it shall take all reasonable precautions to minimize noise as required by applicable laws and the Contract Documents. Notice of proposed noisy operations, including without limitation, operation of pneumatic demolition tools, concrete saws, and other equipment, shall be submitted to Purchaser a minimum of forty-eight (48) hours in advance of their performance. Provider shall further prevent any of its employees or its Sub-Provider employees from playing any recorded music devices or radios or wearing any radio headphone devices for entertainment while working on the project.
11. Drugs Tobacco, and Alcohol - Provider shall take such steps as are reasonably necessary to ensure that employees of Provider or any of its Sub-Provider's employees do not use, consume, or work under the influence of any alcohol, tobacco or illegal drugs while on the project. Likewise, Provider shall prevent its employees or Sub-Provider's employees from bringing any animal onto the project. Provider shall not violate any written Purchaser policies
12. Provider is responsible for all generated trash. Purchaser owned dumpsters and trash bins may not beused for storage or disposal.
13. Provider shall clean all work areas on a daily basis and equipment after project completion. Provider shall ensure that work areas are clear of construction debris, spoils and that all demolition and repair has been completed and surfaces are swept prior to releasing work areas to public access.
14. All staff are to wear identifying clothing at all times when on-site. All personnel on site must first complete the general contractor's safety orientation and wear full PPE as, required on an active construction site at all times.
15. Two (2) or more ground guides shall lead the vehicle across the area of travel for all driving and delivery on the Premises. The speed limit on-the Premises shall be five (5) miles per hour (maximum) or less if conditions require. General Contractor shall designate a construction entry point to eachsite.
16. During the operational phase, all staff or Sub-Providers must check in at the office of the respective facility upon arrival at the site.
17. All electrical enclosures shall match existing conditions, including CMU walls, gates, and fences.
18. Provider is responsible for all aspects of safety of the construction zone. All personnel within the perimeter of the construction zone shall wear proper personal protective equipment (PPE) without any exception.

II. SOLAR PV CRITERIA

1. The Provider shall be responsible for identifying the appropriate conductor route in coordination with the Purchaser. Provider shall adhere to the number of tie-ins at each site as required by the Purchaser. Any change from a physical tie-in to a NEM-A arrangement must be approved in writing bythe Purchaser.
2. The Provider shall work with the Purchaser as-needed to provide visualizations of proposed systemsand assessment of potential glare or reflectivity issues.
3. Warranties - The Provider shall be required to provide the following minimum warranties consistent with Net Energy Metering requirements and the California Public Utility Code 387.5(d)(4), the Provider shall provide a warranty of not less than 10 years to protect against defects and more than a 15% degradation of electrical generation output that may occur as a result of faulty installation. Standard

warranty coverage should be at least twenty-five (25) years for any PV modules, at least ten (10) years for all inverters, or consistent with current Net Energy Metering Requirements for PV System warranty requirements, whichever is greater. Meters must have a 1-year warranty to ensure against defective workmanship, system or component breakdown, or degradation in electrical output of more than 15% from their originally rated electrical output during the warranty period. For meters that are integrated into the inverter, the meter warranty period must be 10 years.

III. GENERAL CODES, GUIDELINES AND STANDARDS

The Provider shall be required to comply with all applicable California public works and project requirements including, but not limited to:

1. Americans with Disabilities Act (ADA).
2. American National Standards Institute (ANSI).
3. American Society for Testing and Materials (ASTM)
4. California Building Code (CBC).
5. California Electrical Code (most recent).
6. California Environmental Quality Act (CEQA).
7. California Fire (CalFire) Solar Photovoltaic Installation Guidelines.
8. California Geological Survey (CGS).
9. California Labor Code
10. California Title 20 and 24.
11. Federal Communications Commission (FCC).
12. Local and State Fire Code.
13. Institute of Electrical and Electronics Engineers (IEEE) 1547: Standard for Interconnecting Distributed Resources with Electric Power Systems.
14. International Electrotechnical Commission (IEC) Technical Committee 82 (TC82).
15. National Fire Protection Association (NFPA), National Electric Code (NEC), Including NFPA 70 and NEC Article 690
16. National Electrical Manufacturers Association (NEMA).
17. Occupational Safety and Health Administration (CAL-OSHA).
18. Local Utility requirements including Net Energy Metering Rules, Interconnection Requirements and Tariffs.
19. Storm Water Pollution Prevention Plan (SWPPP).
20. Underwriters Laboratories (UL) Standards, including 1703: Flat-plate Photovoltaic Modules and Panels and 1741: Standard for Inverters, Converters, Controllers, and Interconnection System Equipment for Use with Distributed Energy Resources.
21. Uniform Solar Energy Code – ICC.
22. All applicable State and Local Codes and Ordinances.
23. Purchaser Specifications and Requirements.
24. Office of Statewide Health Planning and Development (OSHPD)

Provider shall be solely responsible for any and all tax law compliance, including, without limitation, compliance with the requirements related to any use of the Investment Tax Credit. Purchaser shall notmake or cause to be provided any legal guidance or opinions related to taxation matters.

IV. EQUIPMENT AND INSTALLATION STANDARDS

All system design, equipment and installation must conform to the following codes, standards and rating methodologies.

1. All design, equipment and workmanship must comply with the requirements of the local electrical utility. The Provider must ensure all proposed equipment is acceptable to the local electrical utility and meets the interconnection and code requirements.
2. If any equipment using hazardous materials (i.e. Cadmium or other hazardous materials) are included in the Project, then the environmental impact of the hazardous material usage must be discussed, including any special maintenance requirements and proper disposal/recycling of the equipment at the end of its useful life. Equipment containing hazardous materials must comply with the EPA Landfill Disposal Requirements. Any additional costs related to equipment containing hazardous materials must be clearly identified.
3. CPUC approved Electric Rule 21 – Generating Facility Interconnections.
4. UL1741 (Inverters, Converters and Controllers for Independent Power Systems).
5. UL1741-SB (UL 1741 SB specifies the test methods needed to validate compliance with grid protection and grid support functions)
6. UL1703 (Standard for Flat Plate Photovoltaic Modules and Panels).
7. IEEE 929 (2000) – Recommended Practice for Utility Interface of Photovoltaic (PV) Systems.
8. IEEE 1262 (1995) – Recommended Practice for Qualifications of Photovoltaic (PV) Modules.
9. NEC Article 690.
10. All applicable Utility Guidelines and Standards for PV Systems, electrical utility systems and metering requirements, including net energy metering requirements.
11. Conform to the Utility's Distribution Interconnection Handbook
12. Wind uplift requirements per the American Society of Civil Engineers Standard for Minimum Design Loads for Buildings and Other Structures (ASCE 7), and must be able to withstand applicable design wind speeds for that location (at least 85 mph or 105 mph, as applicable (3-second gusts).
13. All other applicable codes.

I. LIGHTING SYSTEMS

1. Purchaser shall furnish canopy lighting system fixtures for Provider's use when installing the PV System. The fixtures shall conform to all requirements as defined by the applicable codes, laws, rules, regulations, and standards of applicable code enforcing authorities, including but not limited to the Local Electric Utility and Governmental Authorities.
2. Canopy lighting systems shall be designed to meet the Illuminating Engineering Society of North America (IESNA) requirements for parking lot areas, to meet or exceed minimum values and maximum uniformity ratios as listed in the IESNA criteria.

3. Lighting shall meet all Title 24 requirements for installations in California.
4. All lighting sources shall be LED type.
5. Lighting control system shall be connected to the existing lighting controls in each area.
6. New design shall cover all areas of the parking lots (in the area of the work) to leave no dark spots and meet IESNA and requirements for all areas previously covered by light standards removed under this contract. Existing fixtures may remain, if not in direct conflict with canopies or causing shading of new canopies.
7. The proposed photometrics plan is provided in the Schedule 6.

V. CALIFORNIA PUBLIC WORKS COMPLIANCE

The Provider shall be required to comply with all applicable California public works and project requirements including, but not limited to:

1. This project is subject to compliance monitoring and enforcement by the Department of Industrial Relations. Provider and any subcontractors will be required to enter certified payroll reports directly into the DIR electronic eCPR system.
2. No contractor or subcontractor may be awarded a contract for public work on a public works project unless registered with the Department of Industrial Relations pursuant to Labor Code section 1725.5.
3. The Provider has obtained from the Director of the Department of Industrial Relations the general prevailing rate of per diem wages and the general prevailing rate for holiday and overtime work in the locality in which this work is to be performed for each craft, classification or type of worker needed to execute the Contract. These per diem rates, including holiday and overtime work, as well as employer payments for health and welfare, pension, vacation, and similar purposes, are on file at the Purchaser, and are also available from the Director of the Department of Industrial Relations. Pursuant to California Labor Code Sections 1720 et seq., it shall be mandatory upon the Provider, and upon any subcontractor under such Provider, to pay not less than the said specified rates to all workers employed by them in the execution of the Contract. The following are hereby referenced and shall be made a part of the Contract and the Provider stipulates to the provisions contained therein.
    i. Chapter 1 of Part 7 of Division 2 of the Labor Code (Section 1720 et seq.)
    ii. California Code of Regulations, Title 8, Chapter 8, Subchapters 3-6 (Section 16000 et seq.)
4. Any worker employed to perform work on the Project and such work is not covered by any classification listed in the published general prevailing wage rate determinations or per diem wages determined by the Director of the Department of Industrial Relations, shall be paid not less than the minimum rate of wages specified therein for the classification which most nearly corresponds to the employment of such person in such classification.
5. Holiday and overtime work, when permitted by law, shall be paid for at the rate set forth in the prevailing wage rate determinations issued by the Director of the Department of Industrial Relations or at least one and one-half (1½) times the specified basic rate of per diem wages, plus employer payments, unless otherwise specified in the Contract or authorized by law.
6. These per diem rates, including holiday and overtime work, and employer payments for health and welfare, pension, vacation, and similar purposes, are on file at the administrative office of

the Purchaser, located as noted above and are also available from the Director of the Department of Industrial Relations. It is the Provider's responsibility to ensure the appropriate prevailing rates of per diem wages are paid for each classification. It shall be mandatory upon the Provider to whom the Contract is awarded, and upon any subcontractor under such Provider, to pay not less than the said specified rates to all workers employed by them in the execution of the Contract.

7. In accordance with the provisions of Labor Code Section 3700, the Provider shall secure payment of compensation to all employees. The Provider shall certify in the Contract as follows: "I am aware of the provisions of Section 3700 of the Labor Code, which requires every employer to be insured against liability for workers' compensation or to undertake self-insurance in accordance with the provisions of that code, and I will comply with such provisions before commencing the performance of the work of this contract."
8. It is the policy of the Purchaser that in connection with all work performed under contracts, there be no discrimination against any prospective or active employee engaged in the work because of race, color, ancestry, national origin, religious creed, sex, age, or marital status. The Provider agrees to comply with applicable federal and California laws, including, but not limited to, the California Fair Employment and Housing Act, beginning with Government Code section 12900 and Labor Code section 1735. In addition, the Provider agrees to require like compliance by any subcontractors employed on the work by such Provider.
9. The Provider and all Subcontractors shall comply with the provisions of California Labor Code including, but not limited to sections 1777.5, 1777.6, and 1777.7 concerning the employment of apprentices. The Provider and any Subcontractor under him shall comply with the requirements of said sections, including applicable portions of all subsequent amendments in the employment of apprentices; however, the Provider shall have full responsibility for compliance with said Labor Code sections, for all apprenticeable occupations, regardless of any other contractual or employment relationships alleged to exist.
10. The Provider shall provide a Drug-Free Workplace Certification pursuant to the requirements mandated by Government Code Sections 8350 et seq., the Drug-Free Workplace Act of 1990. The Drug-Free Workplace Act of 1990 requires that every person or organization awarded a contract or grant for the procurement of any property or service from any State agency must certify that it will provide a drug-free workplace by performing certain specified acts.
11. The Provider agrees that it will abide by and implement the Purchaser's Alcoholic Beverage and Tobacco-Free Premise Policy, which prohibits the use of alcoholic beverages and tobacco products, of any kind and at any time, on Purchaser-owned or leased buildings, on Purchaser property and in Purchaser vehicles. The Provider shall procure signs stating "ALCOHOLIC BEVERAGE AND TOBACCO USE IS PROHIBITED" and shall ensure that these signs are prominently displayed at entrances to work areas at all times.
12. All other applicable California Public Works Code requirements.

VI. Bonding

1. Performance and Payment Bonds. Provider shall deliver to Purchaser evidence that the prime contractor performing the construction and installation services of the Systems maintains payment and performance bonding in favor of the Provider and meeting the following

requirements. Such evidence shall be provided to the Purchaser prior to the commencement of construction on any Property:

iii. Performance Bond. A bond issued by a corporate surety authorized to issue surety insurance in California, in a form commonly used for such purposes, in an amount equal to one hundred percent (100%) of the contract price payable under the contract securing the faithful performance of the contractor of its agreement with Provider; and

iv. Payment Bond. A bond issued by a corporate surety authorized to issue surety insurance in California, in a form commonly used for such purposes, in an amount equal to one hundred percent (100%) of the contract price payable under the contract securing the payment of all claims for the performance of labor or services on, or the furnishing of materials for, the performance of the Contract.

VII. Insurance

1. Provider's Insurance. Provider shall maintain the following insurance coverages in full force and effect from the date that any preparatory installation activities begin at the Site throughout the contract Term:

(a) Workers' Compensation Insurance as required under Applicable Laws;

(b) Employers' Liability Insurance with limits not less than $1,000,000 for bodily injury per accident, $1,000,000 for bodily injury by disease per policy and $1,000,000 for bodily injury by disease per employee;

(c) Commercial Automobile Liability Insurance which will apply to all non-owned, leased and hired automobiles with a combined single limit of not less than $1,000,000 per accident for bodily injury and property damage;

(d) Commercial General Liability Insurance with limits of not less than $2,000,000 per occurrence, $2,000,000 aggregate, which may be meet with a combination of primary and excess umbrella coverage,

(e) Builders Risk Insurance. Provider shall procure and maintain builders' risk insurance (all-risk coverage) on a one hundred percent completed value basis on the insurable portion of the project for the benefit of the Purchaser, and the Provider and subcontractor as their interest may appear, and

(f) Pollution Liability Insurance shall be included as part of the Commercial General Liability Insurance coverage, which may be meet with a combination of primary and excess umbrella coverage.

(g) Provider shall also require any company providing engineering and design services for the System to carry Professional Liability Insurance with limits of not less than $1,000,000 per occurrence.

Any and all deductible costs shall be borne by the Provider. Excess or Umbrella Liability Insurance is acceptable as a supplement to meet the minimum liability coverage limits required above in (c) and (d), however, the excess or umbrella coverage must be primary non-contributory insurance with the same breadth of coverage as the base policy. Additionally, upon the Commercial Operation Date, Provider shall carry commercially adequate property loss insurance for the System. Provider's liability insurance policies will be written on an occurrence basis and, except for Workers' Compensation Insurance, will include Purchaser as an additional insured as its

interest may appear and shall contain a waiver of subrogation in favor of Purchaser and any joint operation parties with respect to coverage for workers' compensation and employers' liability. All insurance required to be maintained by Provider shall be primary and non-contributory insurance underlying any other applicable insurance, including but not limited to similar or complimentary insurance maintained by Purchaser. All such insurance shall be carried by insurance carriers acceptable to Purchaser, acceptance not to be unreasonably withheld, and shall not be materially changed without thirty (30) days prior written notice to Purchaser. In addition, each insurance certificate shall contain a provision stating that the insurer shall give Purchaser thirty (30) days prior written notice in the event of cancellation of the insurance. Provider shall not self-insure in part or in whole any risks for which insurance is herein required without the prior written approval of Purchaser. If Provider fails to maintain insurance policies required in this Agreement and fails to promptly cure following Notice from Purchaser, Purchaser may procure such insurance coverage and deduct and retain the amount of the premiums from any sums due to Provider. It shall be Provider's responsibility to require and confirm that each sub-contractor meets the minimum insurance requirements specified in the Agreement. Provider shall list the Purchaser as additionally insured. Purchaser and its officers, agents, employees, and servants shall be named as additional insured on any such policies of insurance, which shall also contain a provision that (a) the insurance afforded thereby to the Purchaser and its officers, agents, employees, and servants shall be primary insurance to the full limits of liability of the policy and (b) if the Purchaser or its officers, agents, employees, and servants have other insurance against the loss covered by such a policy, such other insurance shall be excess insurance only. Provider shall, upon demand of Purchaser, deliver to Purchaser copies of the certificates of insurance.

2. Generally. Upon a Party's request, made no more than once per calendar year, the other Party shall deliver to the requesting Party certificates of insurance evidencing such respective coverage referenced above, which will specify that the requesting Party will be given at least thirty (30) days' prior Notice by the applicable insurer in the event of any cancellation or termination of coverage. Such insurance will (a) be on an occurrence basis; (b) be primary coverage without right of contribution from any insurance of the requesting Party; (c) provide for a severability of interests clause; and (d) permit waivers of subrogation against the requesting Party. All insurance maintained hereunder shall be maintained with companies either rated no less than A- VII as to Policy Holder's Rating in the current edition of A.M. Best's Insurance Guide (or with an association of companies each of the members of which are so rated). Provider's insurer may be an Affiliate of Provider. In the event that any policy furnished by either Party provides for coverage on a "claims made" basis, the retroactive date of the policy will be the same as the Effective Date, or such other date, as to protect the interest of the other Party. Furthermore, for all policies furnished on a "claims made" basis, a Party's provision of such coverage will survive the termination of this Agreement and the expiration of any applicable warranty period, until the expiration of the maximum statutory period of limitations in the State of California for actions based in contract or in tort.

Schedule 9 – Submittal & Project Acceptance

I. DESIGN PHASE

A. The Purchaser shall review and approve design documentation based on the requirements specified herein. The design drawings and associated documents shall represent 100% of the intended and agreed upon scope for the PV project. The Provider shall be solely responsible for providing complete design and engineering, compliant with all applicable laws and the requirements of the Agreement, by and through appropriately licensed design professionals, including, without limitation, licensed architects and registered professional engineers employed or under direct contract with Provider. The design professionals so engaged shall serve as the Architect or Engineer of Record

B. On the Effective Date, Provider will be given Notice to Proceed (NTP) for the design phase of the project. Upon NTP, Provider may begin due diligence and site discovery in close coordination with Purchaser staff for site access and scheduling.

C. The Provider shall conduct design review meetings, maintain and distribute formal meeting minutes for each stage of the process, which shall include, at a minimum, the following design stages:

Design Stage	**Time from Notice to Proceed with Design**
90% Final Design	within 30 business days

D. The Provider shall submit an electronic submittal package for each Design Stage including, but not limited to the items outlined in Table 1 on the following page.

E. The Provider shall submit the design stage package no less than five (5) business days prior to the design review meeting. The Provider shall address all Purchaser comments in writing no morethan five (5) business days from the date formal Purchaser comments have been received. Purchasercomments shall be incorporated into each successive stage of the design review. Comment responses shall be provided for each phase of design review. Purchaser shall respond to Provider's comments with revisions within ten (10) business days. Any resubmissions to the Purchaser permitting and plan checking dept must be full packages with associated engineer stamps and updated titleblock. Piecemeal resubmission is not acceptable.

F. The Purchaser will formally approve, in writing, each phase of the design upon the Purchaser's determination that the design is progressing at or beyond the percentage completion expected at stage. The Provider shall not enter a subsequent design phase without the approval of the Purchaser. The Provider is solely responsible for obtaining approvals from the Purchaser and all otherAuthorities Having Jurisdiction (AHJs).

G. Drawing sheets to be submitted in one full coordinated plan set document, with exceptions for roof systems for coordination with roofing contractor.

Table 1 – Design Submittal Packages

Submittal Requirement	50% Design	90% Final
1. Cover Sheet (TOC, project details, designers of record, PV summary table[1], etc.)	X	X
2. PV System Sizes & Production Estimates[2]	X	X
3. Site Plan (including array names, any interconnection details, conduit routes)	X	X
4. Site Plan (including topographic survey, GPR/UG Utilities, easements)	X	X
5. N/A	X	X
6. Interconnection Equipment Assessment[3]	X	X
7. Interconnection Plan		X
8. Electrical Site Plan Drawings, incl. Balance of System	X	X
9. Electrical Single Line Diagrams with Utility Meter #s	X	X
10. DC String Wiring Plans (with corresponding inverter locations & IDs)	X	X
11. Electrical Grounding Details	X	X
12. N/A	X	X
13. N/A	X	X
14. Structural Drawings and Calculations		X
15. Array Elevation Plan View		X
16. Equipment Pad, Mounting Details and Elevations	X	X
17. Signage Details	X	X
18. Monitoring System and Metering Details	X	X
19. Lighting Plan, Details and Photometric Plans	X	X
20. All Specifications Related to Scope of Work	X	X
21. Equipment Manufacturer's Cut Sheets and Details		X
22. Interconnection Application Revisions & Any Utility Correspondence		X
23. Complete list of all Subcontractors incl. specialty		X
24. Site Specific Construction Management Plan		X
25. Construction Schedule	Prelim	Detailed
26. Provider's Commissioning Protocol (see Section III below)		X
27. Complete Design Package Sufficient for AHJ Review		X

Notes:

1. PV System Summary Table shall include the following with details for each array: Array No/Name, Dimensions, Azimuth, Tilt, Module Model/Count, Inverter Model/Count, Nameplate, No. of Strings, Canopy Column Count.
2. System size spreadsheet shall include by site: system size, year-one AC production (kWh) and yield (kWh/kWp). Production shall be estimated using approved, industry standard modeling software (e.g. PVSyst). System designs shall be within 5% of contracted target production and must be formally approved by District

H. The Provider shall submit a System Size Spreadsheet showing all system sizes by site, year one production (kWh), and associated yields (kWh/kWp) per item 2 in Table 1. The spreadsheet shall be submitted at each phase of design as noted above and prior to construction. All final system designs shall be within 5% of contracted target production and must receive written approval from customer before submittal to the AHJ. Along with the System Size Spreadsheet, the Provider shall submit updated PV modeling and shade analysis prior to construction and post construction phase using approved modeling software and assumptions.

I. The Provider shall conduct an interconnection equipment assessment for each interconnection site. Any issues with existing Purchaser or Utility equipment that may prevent the system from interconnection to the Utility must be identified at the time of the 50% Design submittal.

J. The Provider shall submit a complete specification packet as part of the 90% Submittal. Specification Divisions that shall be included, if they are part of the Scope of Work for the Project, are:

1. Electrical (General and Solar PV)
2. Cutting and Patching
3. Subsurface Investigation
4. Concrete Forming, Reinforcing, and Finishing
5. Structural Steel Framing
6. Metal Fabrications
7. Roof Patch and Repair
8. Painting and Coating
9. Signage
10. Testing and Commissioning
11. Exterior Lighting and Controls
12. Earthwork
13. Vegetation Clearing and Control
14. Pavement Specialties and Striping
15. Fencing and Gates

K. The Provider shall submit complete electronic copies of all Final Approved Permit Set drawings prior to Construction.

II. CONSTRUCTION PHASE

A. Purchaser shall provide formal NTP for construction upon receipt of acceptable 100% Design PlanSet with all necessary AHJ approvals and all required proof of bonding.

B. Prior to beginning construction, Provider shall:

1. Provide a comprehensive onsite Construction Management and Safety Plan for the construction of the Project in accordance with all applicable laws, policies and OSHA compliant safety practices. Plan should include, at a minimum, address of local emergency medical facilities, project directory, information on Subcontractors-, coordination with Purchaser staff during specific construction tasks, and communication protocols.

2. Provide an updated Detailed Construction Schedule and a three-week look-ahead.

3. Obtain all required permits and approvals from the AHJ(s) and the Utility(ies) prior to starting Construction, in coordination with the Purchaser, and shall make copies available tothe Purchaser of all permit applications and approvals.

C. The Provider shall provide Manufacturers' Installation Manuals for major project components, including, but not limited to: PV modules, inverters, racking or mounting structure, monitoring systems, other major electrical equipment, and lighting. When approved by the Purchaser, recommended installation standards shall become the basis for commissioning, inspecting and accepting or rejecting actual installation procedures used on the work.

D. Prior to ordering equipment and materials, the Provider shall verify all measurements at each project site and notify the Purchaser in writing on any discrepancies between the drawings and sitemeasurements.

E. Any proposed changes to design shall be submitted in writing to the Purchaser for approval beforeany changes are made. Submittal for changes shall contain all necessary details of the proposedchanges and an updated system size and production spreadsheet.

F. CONSTRUCTION SUBMITTALS: The following documents and schedules shall be provided by the Provider as listed:

Table 2 – Construction Submittals

Construction Submittal	Submittal Schedule
1. Construction Mgt & Safety Plan	No later than 15 days prior to site mobilization.
2. Construction Schedule	- Three week look-ahead schedule updated and submitted weekly prior to the weekly meeting. - Detailed schedule regularly maintained and provided every two weeks or as-requested.
3. Manufacturers' Installation Manuals	No later than 5 days after construction kickoff meeting.
4. Weekly Meeting minutes	No later than 48 hours following each weekly project meeting.
5. Test Reports	As available
6. Factory Tests	As available
7. Field Tests	As available
8. Design Deviations/ Requests for Information	As-needed. All deviations shall be accurately and legibly detailed by the Provider and approved by Designer of Record, then presented to the Purchaser/Purchaser's Reps in the form of an RFI. All changes shall be recorded on as-built drawings at the time of the change.
9. Proposed Change Orders	Prior to commencing any changed work, and in the form specified for changes in scope of work in the Agreement, Provider shall submit a proposed change order. No after-the-fact change orders will be accepted by Purchaser.

III. COMMISSIONING PHASE

A. The Provider shall notify the Purchaser and Purchaser representatives prior to commencingcommissioning and provide a schedule for all commissioning activities.

B. Provider shall provide electricians and support to Purchaser and Purchaser representative for verification of commissioning and workmanship, including providing reasonable notice prior to conducting commissioning activities so Purchaser representatives may observe.

C. A detailed/comprehensive Commissioning Report; submitted 15 days after commissioning has been completed on a site-by-site basis.

D. Commissioning shall proceed per the approved commissioning plan submitted during the Design Phase. At a minimum, system commissioning protocol shall include:

1. Conductors
   1.1. AC & DC conductor inspection / megger testing
   1.2. Wire management check
   1.3. DC string Voc and *I*sc testing and recording where possible
   1.4. Confirm all conduits & junction boxes are installed properly/watertight
2. Inspection of DC fusing and disconnects
3. Inspection of AC components: AC Disconnect, Main Switch Board, AC Combiner Panel Boards, Breakers, Fuses, Terminations, Phasing, OCPD operation, etc.
4. Grounding & bonding system inspection & continuity testing
5. Inverters
   5.1. Inverter inspections & tests per manufacturer instructions
   5.2. Inverter start-up & confirm proper inverter settings
   5.3. Inverter output tests - Confirm PV system AC output as expected based on design, insolation and inverter readings
6. IV Curve Trace, Performance testing and recording where possible
7. Thermal Imaging
   7.1. Check all electrical components while systems are energized
   7.2. Spot check, Modules, Inverters, Disconnects, AC system etc.
8. Torque spot check on mechanical and electrical terminations
9. Inspection of corrosion control measures
10. Confirm signage and placards meet plans
11. Workmanship evaluation
12. Inspection of DAS / CT metering and monitoring equipment
13. Weather station component inspection and performance audit
14. Confirm web-based monitoring interface operations
15. Lighting Controls
    15.1. Confirm canopy lighting levels match photometric design
    15.2. Verify component installations
    15.3. Confirm lighting controls function as specified
16. Commissioning of any other major electrical infrastructure installed on the project per manufacturer requirements

IV. CLOSEOUT PHASE

A. Provider shall submit complete digital "as-built" Record Drawings for all sites for review and approval. Final as-built plans shall be provided in both AutoCAD (CAD) and portable document format (PDF) prior to Commercial Operation Date (COD). Provider shall submit one set of final compiled Record Drawings for the Purchaser. The Record Drawings shall incorporate all changes from permit plan sets captured on all as-built sketches, details, and clarifications. Locations of work buried under or outside each building, including, without limitation, all utilities, plumbing and electrical lines and conduits. All deviations from the sizes, locations and other features of installations shown in Issue for Construction (IFC) plan sets and contract documents must be captured in detail in as-built Record Drawings. All horizontal boring, trench routes and depths to be recorded and transferred from logs to record drawings. All canopy column footing depths shall also be recorded and coordinated into as built drawings.

B. The Provider shall submit documentation of Punch List Completion for items under control of the Provider within 30 days of the Purchaser issuing the Final Punch List. The document must be signedand show proof of completion of each item.

C. The Provider shall submit executed Performance Guarantee (PeGu) Agreement amendment(s), if any, within 30 days of Permission to Operate (PTO) at all sites. All performance tables and commercial operation dates must be updated with the final as-built statistics.

D. Any other Project documentation required by the Purchaser.

E. The Provider shall submit to the Purchaser a comprehensive Operations and Maintenance (O&M) Manual for each system, within 30 days of the Utility granting Permission to Operate (PTO) for that system. O&M manuals shall consist of one (1) hard copy and (3) soft copies on USB flash drive in PDF format, provided as a single, bookmarked PDF document. The document shall be a well-organized, comprehensive and custom document created for each site which includes, but is not limited to:

    1. System Description and Overview
    2. Simplified site plan that shows array naming convention, inverter locations, and disconnects
    3. Predicted performance data, including expected production over time
    4. Safety Details, including shut down procedures
    5. Contact information for the system installer and maintenance personnel
    6. As-built drawings. During construction, Provider shall incorporate all information on all As-Builts, sketches, details, and clarifications, and prepare one set of final Record Drawings for the Purchaser. The Record Drawings shall incorporate onto one set of electronic drawings, all changes from all As-Builts, sketches, details, and clarifications. The Provider shall deliver the Record Drawings to the Purchaser at completion of the construction. Locations of work buried under or outside each building, including, without limitation, all utilities, plumbing and electrical lines and conduits. All deviations from the sizes, locations and other features of installations shown in Issue for Construction (IFC) plan sets and contract documents.
    7. Complete material list of all items furnished and installed, including but not limited to the following: PV Modules, inverters, wiring, combiner boxes, panelboards, switch gear, optimizers, disconnects, boxes, metering and DAS equipment, etc. PV System operation details
    8. System testing and commissioning documentation
    9. PTO and any other pertinent Utility documentation

10. Maintenance information, including schedules and responsibilities for ongoing maintenance
11. Troubleshooting and repair, including responses to typical issues
12. All warranties, cut sheets and manuals for major equipment
13. Performance guarantee details, including schedule of performance reporting and example format
14. Monitoring system login and operation details
15. Any other information that may be required for the Purchaser to easily and safely interact with, confirm performance, troubleshoot, maintain and/or service thematerials and equipment installed under this Contract.
16. CAD (electronic format) "as-built" files of all drawings, provided as separate files from the Manual PDF

[REMAINDER OF PAGE INTENTIONALLY BLANK]

V. Project Closeout Submittals

Provider shall deliver the following document submittals to Purchaser in order to attain Purchaserapproval for the listed project closeout milestone.

Table 3 – Closeout Document Submittals

PTO Ready Status	
1	Documentation from AHJ as needed for interconnection
2	Schedule for Project Closeout
3	Commissioning Protocol
4	Utility Interconnection Request Submitted
Commercial Operation Date - COD (All PTO Ready Status items plus:)	
5	Utility Permission-to-Operate (PTO) Notice
6	Provider Commissioning Documentation
7	AHJ(s) Completion Documentation
8	As-Built Plan Sets (w/ Data Sheets for Major Equip.)
9	Reserved
10	As-Built Performance Modeling & 8760 Data
11	Punchlist – Major/Safety Items Signed Off by Purchaser/Inspectors
12	O&M Manual Draft
13	Major Equipment Cut Sheets/Warranty Documentation
14	DAS Login Access and Credentials & Verification of Function
15	Subcontractor Notices of Completion
16	Provider Formal Commercial Operation Notice
Final Completion/Acceptance (All COD items plus:)	
17	Punchlist – All Lists Signed Off
18	O&M Manual Final
19	Sage Cx/Inspection Completed
20	Operation and Safety Training (for Purchaser)
21	All Change Orders/Payments Finalized
22	Final Amended Executed Contracts (PPA & PeGu)
23	Inverter/Data Logger Serial Numbers, IDs, Locations Provided and Functional
24	Record of all trenching/boring routes & depths and canopy column footing depths.
24	Purchaser Notice of Acceptance

For the Purposes of a PPA Contract, achieving the above milestones shall be interpreted as follows:

1. Commercial Operation Date (COD): Provider may begin recording energy delivered for thepurposes of charging the Purchaser.
2. Final Completion: Purchaser will begin paying for energy delivered upon Final Completion.

VI. Submittal Dates

Provider

Submittal Item	***Date***
90% Design Submittal	30 BD from NTP
Final Approved Permit Set, Submitted to AHJ	15 BD from Purchasier's written approval of 100% Design Set
Construction Management Plan	30 BD from NTP
Construction Schedule Submittal	30 BD from NTP
Commissioning Reports	September 1, 2025
O&M Manual, All Sites	September 1, 2025
Punch List Completion Documents, All Sites	September 1, 2025
As Built – Record Drawings	September 1, 2025
O&M Contract Agreement Amendment(s), All Sites	September 1, 2025
PeGu Agreement Amendment(s), All Sites	September 1, 2025

Schedule 10 – General Electric Specifications

SPECIFICATION SECTION 26 00 00: GENERAL ELECTRICAL

PART 1 - GENERAL

1.01 RELATED DOCUMENTS

A. Section 26 60 00: Photovoltaic System Specification

B. Section 05 90 02: Solar PV Canopy Structure Specification

C. Section 05 90 04: Solar PV Roof-Mount Specification

D. Other relevant Purchaser Specifications

NOTE: Where this specification and other specifications or bridging-documents are in conflict, the more stringent shall apply. Provider shall identify conflicts and confirm recommended equipment or procedures with the Purchaser.

1.02 CODES & REFERENCES

A. The design and installation shall conform to all requirements as defined by the applicable codes, laws, rules, regulations and standards of applicable code enforcing authorities (Latest Edition unless otherwise noted). The following are key standards that shall be followed. The Architect/Engineer of Record and Provider shall ensure all applicable codes are followed:

1. ASTM International (ASTM) (www.astm.org), including:
   a. E3010, Standard Practice for Installation, Commissioning, Operation, and Maintenance Process (ICOMP) of Photovoltaic Arrays
2. American National Standards Institute (ANSI)
3. Americans with Disabilities Act (ADA)
4. California Building Code (CBC), with State of California Amendments
5. California Energy Commission Title 24 Building Energy Efficiency Requirements
6. California Department of Forestry and Fire Protection, Office of the State Fire Marshal – Solar Photovoltaic Installation Guidelines
7. California Office of Statewide Health Planning and Development (OSHPD)
8. Code of Federal Regulations (CFR)
9. Factory Mutual (FM)
10. Institute of Electrical and Electronics Engineers (IEEE)
11. International Building Code (IBC)
12. National Electrical Testing Association (NETA)
13. Local Fire Permit Requirements
14. National Electrical Manufacturers Association (NEMA)
15. National Fire Protection Association (NFPA), National & California Electrical Code
16. Occupational Safety and Health Administration (OSHA)
17. Purchaser Specifications and Requirements
18. Underwriters Laboratory (UL), including:
    a. UL 2703 – Standard for Mounting Systems, Mounting Devices, Clamping/Retention Devices, and Ground Lugs for use with Flat-Plate Photovoltaic Modules.
19. Utility company standards and requirements
20. All other applicable Codes and Ordinances

1.03 GENERAL

A. "Purchaser" shall refer to Purchaser as defined in the Energy Services Agreement, who is owner of the site where project will be located, regardless of system ownership, and include any representative of the site owner, such as consultants or inspectors. "Contract" refers to the design-build or construction contract and any associated design-build bridging documents. "Provider" refers to the entity performing the work, inclusive of Engineer and Architect of Record for design-build contracts.

B. This specification defines the general electrical work required for complete and fully functioning photovoltaic systems at each site. The design and installation shall conform to all requirements as defined by the applicable codes, laws, rules, regulations and standards as specified in the Agreement.

C. The Provider shall include all items and all work reasonably inferred by these specifications and the Contract Documents, including any design-build bridging documents. If the Provider is in doubt as to the intent of any portion of these specifications or the Contract Documents, or necessary information is omitted, the Provider shall notify the Purchaser in writing for clarifications or corrections to be provided by addendum.

D. All design documents, cut sheets, and technical specifications shall be submitted, reviewed and accepted by the Purchaser per the guidelines specified in the Contract.

1.04 WORK INCLUDED

A. The work shall include the design of the electrical system, materials, equipment, fabrication, installation and tests in conformity with applicable codes and professionally recognized standards.

B. The electrical design shall be fully developed, including but not limited to the following:

1. Description and supportive calculations for all power and grounding systems.
2. Evaluation of existing switchgear and Utility transformers for interconnection compatibility.
3. Location and layout of all system equipment.
4. Site plans, elevations, schedules, equipment arrangement and detailed drawings
5. Single line diagrams including local utility system tie-ins.
6. All other drawings, calculations, details, and schedules required for the system design.

C. All required construction documents and compliance documentation.

D. Temporary power and lighting as required for construction.

E. All required incidental work directly related to the construction of the System, such as excavating, directional boring, backfilling, roof flashing, , , pavement repair, ,and testing.

F. Any other electrical work as might reasonably be implied as required to fulfill the contracted scope, even though not specifically mentioned herein or shown on the drawings

G. Design and construction coordination with all other disciplines and trades.

H. All other utilities, labor, materials, apparatus, tools, equipment, transportation, and special or occasional services as required to fulfill the contracted scope.

1.05 CONDITIONS AT SITE

A. Provider is responsible for familiarizing themselves with the site construction drawings. No extra payment will be allowed for work required that was discernible from the site construction drawings.

B. Lines of other services that are damaged as a result of this work shall promptly be repaired at no expense to the Purchaser and to the complete satisfaction of the Purchaser.

1.06 QUALITY ASSURANCE

A. GENERAL

1. Construction Documents shall be designed and signed by a validated, registered professional engineer in the State of California.

B. CONFORMANCE

1. All equipment and accessories to be the product of a manufacturer regularly engaged in its manufacture.
2. Supply all new equipment and accessories free from defects and listed by Underwriter's Laboratories, Inc., or bearing its label or label of a Nationally Recognized Testing Laboratory (NRTL).
3. All items of a given type shall be the products of the same manufacturer, or equal.
4. If after contract is awarded, minor changes and additions are required by aforementioned authorities, they shall be included at Provider's expense.
5. If after contract is awarded, minor changes and additions are required to maintain code compliance, they shall be included at Provider's expense.

C. COORDINATION

1. Provider shall become familiar with the conditions at each job site and plan the installation of the electrical work to conform with the existing conditions so as to provide the commercially reasonable assembly of the combined work of all trades within the Provider's scope.

D. COORDINATION DRAWINGS FOR ELECTRICAL INSTALLATION

1. Prepare Coordination Drawings, to scale. Detail major elements, components and systems of electrical equipment and materials in relation to each other and to other systems, installations, and building components. Indicate locations and space requirements for installation, access and working clearances. Show where sequence and coordination of installations are important to the efficient flow of the Work. Indicate the following:
    a. Provisions for scheduling, sequencing, moving and positioning large equipment in or on the site or buildings during construction.
    b. Plans, elevations and details including the following:
        i) Clearances to meet safety requirements and for servicing and maintaining equipment, including space for equipment disassembly required for periodic maintenance.
        ii) Equipment support details.

iii) Exterior wall, roof and foundation penetrations of cable and raceway; and their relation to other penetrations and installations.
iv) Sizes and locations of required concrete pads and bases.
v) Grounding system details.

1.07 DELIVERY, STORAGE AND HANDLING

A. Protection: Use all means necessary to protect the materials of this Section before, during, and after installation and to protect the work and materials of all trades.

B. Delivery and Storage: Deliver all materials to the job site in their original containers with all labels intact and legible at time of use. Store in strict accordance with approved manufacturers' recommendations. All deliveries are to be made to the Provider's job trailer or approved storage location. Under no circumstances shall Purchaser be responsible for accepting deliveries.

C. Replacements: In the event of damage, immediately make all repairs and replacements necessary to the approval of the Purchaser and at no additional cost to the Purchaser.

D. Provider shall personally, or through an authorized representative, check all materials upon receipt at jobsite for conformance with approved shop drawings and/or plans and specifications.

1.08 SCHEDULING/SEQUENCING

A. Provider shall coordinate all schedules and sequencing of electrical work with Purchaser.

B. Place orders for all equipment in time to prevent any delay in construction schedule or completion of project. If any materials or equipment are not ordered in time, additional charges made by equipment manufacturers to complete their equipment in time to meet the construction schedule, together with any special handling charges, shall be borne by the Provider.

1. Provider shall coordinate production and delivery schedule for all Purchaser-supplied equipment with the equipment suppliers to ensure that all Purchaser-supplied equipment is delivered to site in coordination with the construction schedule and in such a manner as to cause no delays in completion of the Contract as scheduled.

1.09 WIND LOADING AND SEISMIC DESIGN

A. Comply with all applicable codes and standards and provide wind load restraints for all equipment installed under this contract that requires restraint. The electrical equipment wind loading restraint shall be designed as required by the Authorities Having Jurisdiction (AHJs).

B. The electrical system shall be designed to meet all seismic design requirements of the AHJs. Where applicable, the electrical equipment shall be designed to accommodate lateral displacement in the event of an earthquake based on a nonlinear response-history seismic analysis for the appropriate seismic zone.

1.10 PERMITS AND INSPECTIONS

A. Provider shall obtain all required permits and arrange for all required inspections, including utility company requirements, inspections, and sign-offs.

B. Do not allow or cause any of the work to be covered or enclosed until it has been tested and/or inspected.

PART 2 - PRODUCTS

2.01 MATERIALS

A. Materials of the same type or classification, used for the same purpose, shall be the product of the same manufacturer, or equal.

2.02 POSTED OPERATING INSTRUCTIONS

A. Furnish approved operating instructions for systems and equipment where indicated in the technical sections for use by operation and maintenance personnel. The operating instructions shall include wiring diagrams, control diagrams, and control sequence for each principal system and equipment. Print or engrave operating instructions and frame under glass or in approved laminated plastic. Post instructions as directed. Attach or post operating instructions adjacent to each principal system and equipment including startup, proper adjustment, operating, lubrication, shutdown, safety precautions, procedure in the event of equipment failure, and other items of instruction as recommended by the manufacturer of each system or equipment. Provide weather-resistant materials or weatherproof enclosures for operating instruction exposed to the weather. Operating instruction shall not fade when exposed to sunlight and shall be secured to prevent easy removal or peeling.

2.03 CATALOGGED PRODUCTS / SERVICE AVAILABILITY

A. Materials and equipment shall be current products by manufacturers regularly engaged in the production of such products. Specified product models shall have been in satisfactory commercial or industrial use for a minimum of 2 years prior to design. The 2-year period shall include applications of equipment and materials under similar circumstances and of similar size. The 2-year period shall be satisfactorily completed by a product for sale on the commercial market through advertisements, manufacturers' catalogs, or brochures. Products having less than a 2-year field service record will be acceptable if a certified record of satisfactory field operation for not less than 6,000 hours, exclusive of the manufacturers' factory or laboratory tests, is furnished. The equipment items shall be supported by service organizations which are reasonable convenient to the equipment installation in order to render satisfactory service to the equipment on a regular and emergency basis during the warranty period of the contract.

2.04 ACCEPTABLE MANUFACTURERS

A. Materials shall be of make mentioned elsewhere in this specification, or equal. All materials shall be new and approved by the Underwriters' Laboratories or an NRTL approved by Purchaser.

2.05 BASIC ELECTRICAL EQUIPMENT AND MATERIALS

A. Inverters and PV Modules – See Specification 26 60 00.

B. AC Panelboards:

1. As manufactured by Cutler-Hammer, Square D, General Electric, Siemens, IEM, or to match existing equipment at each Site, wherever possible. Similar products may be submitted for considerations and formal approval. Equipment shall at a minimum be NEMA 3R outdoors or NEMA 1 for surface mount in unfinished interior locations and flush mounted in finished and occupied spaces. Provide housekeeping pads for all floor or slab mounted equipment.
2. Enclosures: code gauge galvanized sheet steel with welded full flange end pieces, stretcher-leveled steel trim, back pan and door or painted steel or powder-coated steel. All surface mounted panels to have enclosures painted in gray enamel. All flush mounted panels to have cover painted to match adjacent surface.
3. Phase and ground bussing of copper with silver-plated or tin-plated or nickel-plated contact surfaces.
4. Trims on surface-mounted cabinets secured with nickel-plated screws with cup washers, bottom of all trims to have lugs for resting on cabinet flange.
5. Panels shall be 20 inches minimum in width, provided with approved gutter space, barriers and adjustable supports. Doors mounted with concealed hinges provided with combination spring latch and lock. Doors and trims and surface mounted cabinets primed and finished with one coat baked on gray enamel.
6. Each panel shall be equipped with a copper ground bus.
7. All panels shall be fully bussed to accept future circuit breakers.

C. Distribution Low Voltage Dry-Type Transformers (120/208V and 277/480V):

1. Ventilated type, NEMA 3R where used outdoors.
2. Transformer shall be 3-phase, 60 Hertz. Primary winding shall be Delta connected and secondary winding shall be Wye connected. The temperature rise at rated voltage and full load shall not exceed 150 degrees C with a 220 degrees C U.L. Component Recognized Insulation System. The windings shall be Aluminum or Copper.
3. The higher voltage winding shall have quantity (6) 2.5% taps - (2) FCAN and (4) FCBN. Set secondary voltage for 120/208V.
4. Transformer terminals shall be front connected for ease of installation and maintenance.
5. Where the transformers are installed outdoors provide weatherproof drip cover, rodent screen and a NEMA 3R rating of the enclosure.
6. Transformers shall be suitable to carry the PV load characteristics and in the direction of power flow required for the PV system power production.

D. Circuit Breakers:

1. Circuit breakers shall be molded case rated 250 or 480 volt, multiple or single pole with amperage ratings as required for each circuit. All breakers to be bolt on, manually operated with "de-ion" arc chutes. Plug-in breakers are not acceptable.
2. Circuit breakers shall be rated to interrupt the available short circuit current at the point of application.

E. Raceways and Conduit Bodies: Only the raceways specified below shall be utilized on these projects. Substitutions shall be pre-approved in writing:

1. Rigid Type - hot dip galvanized or sherardized steel, to be used at all exterior locations, below grade, or in concrete slab, and to 18 inches on either side of structural expansion joints in floor slabs, with completely watertight, threaded fittings throughout.

    a. All rigid steel conduit couplings and elbows in soil or concrete or under membrane to be ½ lap wrapped with Scotch #50 tape and threaded ends coated with T&B #S.C.40 rust inhibitor prior to installation of couplings.
    b. ½ lap wrap all rigid steel conduit stub-ups from slab or grade to 6" above finished grade level with Scotch #50 tape.
    c. In lieu of rigid steel conduit for power and control raceways and branch circuit conduits in soil or concrete slabs, "Schedule 40" PVC with Schedule 80 PVC conduit elbows and stub-ups may be used with code size (minimum No. 12) ground wire. A “stub-up” is considered to terminate 6” above the finished surface.

        i) Schedule 80 PVC conduit shall be used in all concrete footings or foundations and to 18” of either side of footings or foundation walls.
        ii) Schedule 80 PVC conduit shall be used in all concrete masonry unit (CMU) walls or columns.

2. Provide a minimum cover of 36 inches for all conduits in ground outside of buildings, unless otherwise noted.

3. Conduit installed using horizontal directional boring (HDB) shall include tracer tape or traceable conduit. Minimum depth of the conduit shall be per NEC Table 300.5 or per Purchaser Requirements, whichever is more stringent. The Provider is responsible for demonstrating that all conduits installed utilizing horizontal boring meets the minimum depth requirement and is solely responsible for any remediation costs and schedule impacts if the specification is not met. Provider shall provide documentation of final depth and routes of all conduit installed in horizontal bores.

4. Conduit buried underground shall be suitable for the application and compliant with all applicable codes. PVC shall be constructed of a virgin homopolymer PVC compound and be manufactured according to NEMA and UL specifications. All PVC conduit feeders shall contain an appropriate copper grounding conductor sized per NEC requirements and continuity shall be maintained throughout conduit runs and pull boxes. Minimum conduit size shall be ¾”. A metallic tracing/caution tape shall be installed in the trench over all buried conduit. All underground conduits placed in trenches, buried under roadways, or swales shall be encased with red dyed concrete slurry cap.

5. All conduit runs in concrete floor slabs (where allowed) shall be installed to comply with all applicable UBC and structural codes to maintain the structural integrity of the floor slab. Where conflicts occur, alternate routing shall be provided at no additional cost to the Purchaser.

6. Electrical Metallic Tubing (EMT) shall only be exposed in electrical and mechanical rooms and in unfinished spaces and in concealed and furred spaces, made up with steel watertight or steel set screw type fittings and couplings. Set screws shall have hardened points. Cast fittings are unacceptable. EMT may be used in exterior installations where allowed by NEC

or AHJ requirements and any other applicable code. All exterior fittings shall be watertight. EMT may not be installed in areas subject to severe physical damage, including in any carport location with potential for vehicle strike or within 8' of grade.

7. All exposed conduits on sides of buildings, or in other visible areas, shall be painted to match adjacent finishes, after complete installation.
8. Fasten conduits securely to boxes with locknuts and bushings to provide good electrical continuity.
9. To facilitate pulling of conductors, install junction boxes as required.
10. If any empty conduits are provided as part of the projects, they shall be provided with a minimum of two sufficiently rated pull strings or wires inside conduit for future wire pull.
11. If conduits are to pass through structural expansion joints in floor slab, rigid galvanized conduit shall be used 18" on either side of joint, complete with Appleton expansion couplings and bonding jumpers, or equal. All above grade expansion joint crossings shall also utilize expansion joint couplings or flex conduit transitions as required for each particular installation. No solid conduits shall be allowed to cross expansion joints without proper provisions for building and seismic movement. Expansion joints only refer to contiguous structures, not the overhead space between adjacent, separate canopies. Under no circumstance shall conduits/conductors pass overhead between separate canopies.
12. Provide thermal expansion fittings or provisions, per NEC 300.7(b), for all raceways subject to high temperatures in direct exposure to sunlight. Provide expansion provisions where more than 0.25" of expansion is calculated.10.
13. Provide and install exterior wall conduit seals and cable seals in the locations listed below. Coordinate installation and scheduling with other trades:
    a. Conduit seals through exterior wall or slab (below grade): O.Z. Gedney series "FSK" in new cast in concrete locations, series "CSM" in cored locations.
    b. Conduit seals through exterior wall or slab (above grade): O.Z. Gedney series "CSMI."
    c. Cable seals at first interior conduit termination after entry through exterior wall or slab: O.Z. Gedney series "CSBI." Coordinate quantity of conductors at each location.

F. Function Boxes / Pull Boxes:

1. One-piece steel knockout type drawn j-boxes, unless otherwise noted, sized as required for conditions at each location.
2. J-boxes for wet locations, cast aluminum FS or FD type with cast aluminum gasketed spring lid cover. Weatherproof "Bell" type boxes are not acceptable.
3. Pull boxes to be NEMA 1 (indoor) or NEMA 3R (outdoor), sized per code, with grey enamel finish, steel construction, and screw-on covers.
4. All connectors from conduit to junction or outlet boxes shall have insulated throats. Connectors shall be manufactured with insulated throats as integral part. Insertable insulated throats are unacceptable.
5. Conduit Bodies: Malleable iron type, with lubricated spring steel clips over edge of conduit body, O-Z/Gedney type EW, or equal.

G. Site Pull boxes: All site pull boxes shall be flush in-ground concrete, with engraved covers identifying service use (i.e. electrical, communications, etc.). Boxes shall be NEMA 250, Type 6, outside flanged, with recessed cover for flush mounting, by Christy or equal, with required depth to provide box and conduit depths shown or required.

1. Provide concrete covers for all boxes in planted or paved areas (up to available concrete cover size).
2. Provide galvanized steel covers for all larger boxes (when concrete is not available), or in traffic areas. No cast iron covers.
3. Provide bolted covers and slab bottoms (with grouted perimeter) or vault type boxes for all electrical distribution and signal system pull boxes used for site distribution, to prevent rodent entry. No collar type boxes with dirt or gravel bottoms.
4. Provide drain hole at bottom of all vault type boxes, with loose aggregate base below, for proper drainage.
5. All covers to be completely flush with finished adjacent surfaces.
6. Provide galvanized steel water rated covers and installation of box rated for water in all traffic areas.

H. Wire and Cable:

1. 600 or 1,000-volt class (as required for system design), insulation color coded, minimum No. 12 AWG for DC string circuits or AC circuits.
2. <u>All conductors shall be copper. Any substitution shall require written approval from Purchaser.</u>
3. Insulation type:
   a. Standard locations: Conductors shall be Type PV or THWN or THWN-2 or RHH, RHW-2, USE-2 for wet and dry locations. All AC wire sizes used shall be based on a 75-degree C insulation rating, unless specifically used with 90-degree rated devices. For wires/cables with 90 deg C insulation, the 90 deg C ampacity ratings shall be used for cable sizing before conditions of use de-rates are applied per NEC. All DC wire sizes shall be based on 90-degree insulation rating, when used with 90-degree rated PV equipment and components.
   b. All conductors shall be stranded.
   c. Install all wiring (low voltage and line voltage) in conduit, except PV string wiring at modules, which may be run outside of raceway.
   d. Do not pull conductors into conduit until raceways and boxes have been thoroughly cleaned and swabbed as necessary to remove water and debris.
   e. Approximately balance all AC circuits about the neutral conductors in AC collector panels.
   f. All wire and cable shall bear the Underwriters' Label or equivalent NRTL label, brought to the job in unbroken packages.
   g. The equipment grounding conductor shall be insulated or bare copper; where it is insulated, the insulation shall be colored green.
   h. Install all circuits in one continuous section unless splices are approved by Purchaser. Exercise care in pulling to avoid damage or disarrangement of conductors, using

approved grips. No cable shall be bent to smaller radius allowed by NEC code or manufacturer recommendations. Color code feeder cables at terminals. Provide identifying linen tags in each pull box

I. Fire stopping: as manufactured by 3M Fire Protection Products or equal.

1. Purchaser shall supply all required under-canopy fire suppression.
2. Fire-rated and smoke barrier construction: Maintain barrier and structural ceiling fire and smoke resistance ratings including resistance to cold smoke at all penetrations, connections with other surfaces or types of construction, at separations required to permit building movement and sound vibration absorption, and at other construction gaps.
3. Systems or devices listed in the UL Fire Resistance Directory under categories XHCR and XHEZ may be used, providing that it conforms to the construction type, penetration type, annular space requirements and fire rating involved in each separate instance, and that the system be symmetrical for wall penetrations. Systems or devices must be asbestos free.
4. When these assemblies are penetrated, seal around conduits and equipment with approved firestopping material. Install firestopping material complete as directed by manufacturer's installation instructions.
5. Meet requirements of ASTM E814, Standard Test Method for Fire Tests of Through Penetration Fire Stops.

PART 3 - EXECUTION

3.01 INSPECTION

A. Examine the areas and conditions under which the work of this Section will be installed. Do not proceed until unsatisfactory conditions have been corrected by Purchaser.

3.02 FIELD QUALITY CONTROL

A. All workmanship shall be Best in Class and carried out in a manner satisfactory to and approved by the Purchaser.

B. This Provider shall personally, or through an authorized and competent representative, constantly supervise the work and, as much as possible, keep the same foreman and workmen on the job throughout.

3.03 INSTALLATION/APPLICATION/ERECTION

A. All cutting, repairing and structural reinforcing for the installation of this work shall be done by the Provider in conformance with the Purchaser's requirements.

B. Floor Mounted Inverter Installation: Provide mounting channels for grouting into floor or slab. Channels shall be properly drilled to receive the equipment placed flush in floor, leveled and secured in place prior to pouring of floor, of length as required for switchboard. Bolt or weld switchboard to channels.

C. Furnish and install all disconnect switches as required by code (AC and DC).

3.04 EARTHQUAKE RESISTANT INSTALLATION & FASTENING:

A. All electrical equipment and raceways shall be designed to conform to all requirements as defined by applicable codes, laws, rules, regulations, and standards of applicable code enforcing authorities, including, but not limited to the Local Electric Utility and Governmental Authorities.

B. For floor mounted inverters and switchboards / distribution panels, shall be designed to conform to all requirements as defined by applicable codes, laws, rules, regulations, and standards of applicable code enforcing authorities, including, but not limited to the Local Electric Utility and Governmental Authorities.

3.05 ADJUSTING AND CLEANING

A. All electrical equipment, including existing equipment not "finish painted" under other sections, shall be touched up where finished surface is marred or damaged.

B. All equipment shall be left in clean condition, with all shipping and otherwise unnecessary labels removed there from.

C. Throughout work, remove construction debris and surplus materials accumulated during work.

D. Upon completion of installation, thoroughly clean electrical equipment, removing dirt, debris, dust, temporary labels and traces of foreign substances.

3.06 IDENTIFICATION

A. Inverters, combiner boxes, pull boxes, switchboards, panel boards, distribution circuit breakers, disconnect switches, and related electrical enclosures shall be properly identified by means of engraved laminated plastic descriptive nameplates mounted on apparatus using stainless steel screws or permanent epoxy adhesive where set screws are not feasible. Standard adhesives alone are not acceptable. Nameplates shall have white letters with black background. Cardholders in any form are not acceptable.

B. Provide all required safety and identification placards as required by code.

3.07 PAINTING OF EQUIPMENT

A. Factory Applied: Electrical equipment shall have factory-applied painting systems which shall, as a minimum, meet the requirements of NEMA ICS 6 corrosion-resistance test, except equipment specified to meet requirements of ANSI C37.20 shall have a finish as specified in ANSI C37.20.

B. Field Applied: Paint electrical equipment as required to match finish or meet safety criteria.

3.08 TESTING

A. General:

1. All inspections and tests shall be in accordance with the International Electrical Testing Association - Acceptance Testing Specifications ATS-2009 (referred to herein as NETA ATS-2009).

2. Final test and inspection may be conducted in presence of Purchaser: Tests shall be conducted at the expense of and by the Provider at a mutually agreed time. Submit written test reports.

3. The electrical installation shall be inspected and tested to ensure safety to building occupants, operating personnel, conformity to code authorities, and final Construction Shop Drawings.
4. Final Inspection Certificates: Prior to final payment approval, deliver to the Purchaser, with a copy to the Purchaser, signed certificates of final inspection by the appropriate inspection authority.
    a. Grounding System:
        i) All ground connections shall be checked and the entire system shall be checked for continuity. The resistance of the ground system at each site shall be measured using a 3-point fall-of-potential method. The maximum ground resistance shall be three ohms.
        ii) Ground tests shall meet the requirements of the National Electric Code, Article 250.
        iii) All PV system grounding shall meet the requirements of NEC Article 690.

END OF SPECIFICATION SECTION 26 00 00

Schedule 11 – Photovoltaic System Specifications

SPECIFICATION SECTION 26 60 00: PHOTOVOLTAIC SYSTEM

PART 1 - GENERAL

1.01 RELATED DOCUMENTS

A. The Contract and any design-build bridging documents.

B. Section 26 00 00: General Electrical Specifications

C. Section 05 90 02: Solar PV Canopy Structure Specification

D. Section 05 90 04: Solar PV Roof-Mount Specification

E. Other relevant Purchaser Specifications

NOTE: Where this specification and other specifications or bridging-documents are in conflict, the more stringent shall apply. Provider shall identify conflicts and confirm recommended equipment or procedures with the Purchaser.

1.02 CODES & REFERENCES

A. The design and installation shall conform to all requirements as defined by the applicable codes, laws, rules, regulations and standards of applicable code enforcing authorities (Latest Edition unless otherwise noted). The following are key standards that shall be followed. The Architect/Engineer of Record and Provider shall ensure all applicable codes are followed:

1. ASTM International (ASTM) (www.astm.org), including:
   a. E3010, Standard Practice for Installation, Commissioning, Operation, and Maintenance Process (ICOMP) of Photovoltaic Arrays
2. American National Standards Institute (ANSI)
3. Americans with Disabilities Act (ADA)
4. California Building Code (CBC), with State of California Amendments
5. California Energy Commission Title 24 Building Energy Efficiency Requirements
6. California Department of Forestry and Fire Protection, Office of the State Fire Marshal – Solar Photovoltaic Installation Guidelines
7. California Office of Statewide Health Planning and Development (OSHPD)
8. Code of Federal Regulations (CFR)
9. Factory Mutual (FM)
10. Institute of Electrical and Electronics Engineers (IEEE)
11. International Building Code (IBC)
12. International Electrotechnical Commission (IEC), including:
    a. 62446-1 Photovoltaic (PV) systems – Requirements for testing, documentation and maintenance. Part 1: Grid connected systems – Documentation, commissioning tests and inspection
13. National Electrical Testing Association (NETA)
14. Local Fire Permit Requirements
15. National Electrical Manufacturers Association (NEMA)
16. National Fire Protection Association (NFPA),
17. National Electrical Code (NEC)
18. Occupational Safety and Health Administration (OSHA)
19. Purchaser Specifications and Requirements
20. Underwriters Laboratory (UL), including:

a. UL 2703 – Standard for Mounting Systems, Mounting Devices, Clamping/Retention Devices, and Ground Lugs for use with Flat-Plate Photovoltaic Modules.

21. Utility company standards and requirements
22. All other applicable Codes and Ordinances
23. Where code requirements are at variance with Contract Documents, meet code requirements as a minimum requirement and include costs necessary to meet these in Contract. Machinery and equipment are to comply with OSHA requirements, as currently revised and interpreted for equipment manufacturer requirements. Install equipment provided per manufacturer recommendations.
24. Whenever this Specification calls for material, workmanship, arrangement or construction of higher quality and/or capacity than that required by governing codes, higher quality and/or capacity take precedence.

1.03 GENERAL

A. "Purchaser" shall refer to owner of the site where project will be located, regardless of system ownership, and include any representative of the site owner, such as consultants or inspectors. "Contract" refers to the design-build or construction contract and any associated design-build bridging documents. "Provider" refers to the entity performing the work, inclusive of Engineer and Architect of Record for design-build contracts.

B. The project includes the design and construction of complete Photovoltaic Systems (PV), including all AC and DC components. The design and installation shall conform to all requirements as defined by the applicable codes, laws, rules, regulations and standards as specified in the Contract.

C. The Provider shall include all items and all work reasonable required to complete the System in accordance with the Agreement. If the Provider is in doubt as to the intent of any portion of these specifications, or necessary information is omitted, the Provider shall notify the Purchaser in writing for clarifications or corrections to be provided by addendum.

D. All design documents, cut sheets, and technical specifications shall be submitted, reviewed and accepted by the Purchaser per the guidelines specified in the Contract and any bridging documents.

1.04 WORK INCLUDED

A. The work shall include the design, engineering, materials, labor, equipment, installation, testing, services, and incidentals necessary to install complete Photovoltaic (PV) Systems in conformity with applicable codes and professionally recognized standards.

B. PV systems shall consist of arrays of framed photovoltaic modules, mounting hardware, terminal boxes, combiner boxes, quick-connect electrical connectors, DC wiring, DC disconnects, utility interactive inverters, AC disconnects, AC feeders, AC circuit breakers, AC panel boards / switchgear, and complete data acquisition and monitoring systems.

C. The PV systems shall be utility grid connected. The Provider shall be responsible for all required utility company coordination, applications, inspections, permits, and final approval for the complete interconnection of the PV systems with the utility company grid, including bi-directional utility meters at each location. Provider shall coordinate with the Local Electric Utility to schedule any power outages required to interconnect the PV System and will establish a

mutually agreed upon date and time for such an outage with the Purchaser before scheduling. Provider shall be responsible for any Local Electric Utility fees associated with the planned outage but shall not be responsible for other costs incurred by the Purchaser as part of coordinating this outage.

D. The Provider shall ensure adequate clearance and equipment space within the allotted areas and existing building and site conditions. All equipment and sizes / clearances shall be coordinated with the Purchaser prior to rough-in.

1.05 QUALITY ASSURANCE

A. All equipment shall be listed to Underwriters' Laboratories (UL) standards as applicable.

B. Installer Qualifications – The installing Provider shall be familiar with the equipment to be installed and have the necessary training to install in the equipment.

1.06 MATERIALS, DELIVERY, STORAGE, AND HANDLING

A. All materials shall be delivered new, undamaged and without defects.

B. All equipment and panels shall be handled with care so as not to damage the delivered products. All equipment shall be installed in new and neat condition.

C. Appropriate protective clothing shall be worn when handling the equipment.

PART 2 - PRODUCTS

2.01 ACCEPTABLE MANUFACTURERS

A. Acceptable system manufacturers/vendors shall be as specified in other sections of this document.Manufacturers shall provide their latest line of equipment, meeting all current industry standards and all performance criteria set forth in this document. The Purchaser seeks equipment from proven, industry leading manufacturers in solid financial standing, producing tier-one equipment.

B. Provider proprietary products shall have an International Code Council (ICC) report or a testing report stamped and signed by a licensed California engineer.

2.02 EQUIPMENT AND MATERIALS

A. PV MODULES SHALL MEET THE FOLLOWING:

1. Module manufacturer that has produced no less than 250MW of modules in the prior year.
2. Modules are from a field-tested product line that has been commercially available for no less than three years.
3. Module manufacturer shall provide a 25-year warranty on the solar modules with at least 80 percent power output guaranteed at 25 years.
4. Have a minimum 25-year design life, designed for normal, unattended operation.
5. UL 1703 listed.

6. UL listed for the specified voltage (typically 1000 V-DC).
7. Meet IEC 61215 (crystalline silicon PV modules) or IEC 61646 (thin film PV modules) standards.
8. Meet California SB1 Guidelines for Eligibility.

B. INVERTERS SHALL MEET THE FOLLOWING:

1. String-type inverters.
2. Integrated AC and DC disconnects
3. Include a 10-year warranty.
4. Manufacturer produced no less than 250 MW of inverters in the prior fiscal year.
5. Field-tested product line that is commercially available for no less than 2 fiscal years.
6. Comply with the following:
   a. UL 1741 listed, inclusive of UL 1741-SB requirements.
   b. IEEE 1547, including testing to IEEE 1547.1 and IEEE C62.45.
   c. IEEE C62.41.2 and CSA107.1-01.1.
   d. California Rule 21, CEC approved and utility line interactive type.
7. Incorporate disconnect switch for main DC power disconnect in compliance with applicable codes and utility requirements.
8. Sized as required to support the PV module production load within the rating of the equipment, together with all other components. Sizing shall not exceed 1.35 DC:AC ratio without approval by Purchaser.
9. Meet the following requirements:
   a. Nominal AC Voltage (Three-phase, + 10%): 208, 240, or 480 VAC (as required per site)
   b. Nominal AC Frequency (+ 0.5 Hz): 60 Hz
   c. Line Power Factor (Above 20% rated power): >0.99
   d. AC Current Distortion (At rated power): <5% THD
   e. Maximum Open Circuit Voltage DC: 1,000 VDC
   f. Maximum Ripple Current (% of rated current): <5%
   g. Minimum Inverter Efficiency: >96%
   h. Temperature Range Ambient: -4º F to 122º F (-20º C to 50º C)
   i. Enclosure Environmental Rating (minimum): NEMA 3R
   j. Relative Humidity (non-condensing): 0-95%
   k. Sound level: <85 dBa
   l. Capable of producing reactive power to operate between a power factor of 0.9 lagging to 0.9 leading (as adjusted on the inverter equipment).
   m. Protective Functions: Standard wakeup voltage, wakeup time delay, shutdown power, shutdown time delay, AC over / under voltage and time delays, AC over / under frequency and time delays, ground over current, over-temperature, AC and DC over current, DC over voltage
   n. User Display: Standard-LCD with on/off capability where possible
   o. DC Disconnect: 1,000 VDC load break rated

p. Isolation Transformer (if applicable): High-efficiency type, supplied by the manufacturer of the Inverter Systems, mounted within same enclosure or directly adjacent, with factory-designated wiring provisions.
q. Zone 4 Seismic Rating (free standing) or wall mounted
r. Internal combiner panel option to allow connections of sub-arrays at the Inverter without the use of additional equipment.

C. All equipment costs shall include all known and future duties, tariffs, export tariffs, customs, demurrage, and shipping costs.

D. No substitution for contracted equipment shall be made without the written consent of Purchaser. Such consent will not to be unreasonably conditioned, delayed, or withheld.

E. Upon connection of the new PV systems, provide a placard on the respective Main Switchboard to identify the two sources of power feeding the equipment.

F. Combiner boxes (where used) shall be NEMA 3R rated (minimum) and shall include fuses for string inputs and a bus bar to combine the strings into sub-arrays, for input into the Inverter system. Minimum combiner box output bus ampacity shall be 156% of the rated short circuit current available to be carried on the bus (the sum from all strings to the bus).]

G. All AC interconnecting feeders shall be sized to NEC Table 310.16 (75 degree column) based on associated disconnect amperage. Conduit fill to 40% max. Include temperature derating as required for the ambient temperatures and roof conditions per NEC. Provide equipment grounding conductor in each conduit.

H. All roof and exterior mounted raceways shall be designed and installed to accommodate expansion and contraction due to heating affects, including adequate cable length and listed expansion couplings. All expansion couplings or installations shall include grounding bonding jumpers as required by code.

I. All AC circuits to be 3-wire or 4-wire + ground. All grounding per NEC 690, Part V.

J. All DC circuits and feeders sized to NEC table 310.16 (90-degree column) based on associated disconnect amperage. Minimum ampacity shall be 156% of the rated short circuit current available to be carried on the specific conductor. Conduit fill to 40% max. Include temperature derating as required for the ambient temperatures and roof conditions per NEC. Provide equipment grounding conductor in each conduit.

K. All DC circuits to be 2-wire + ground.

L. All AC and DC wiring in conduit to be RHW-2, PVWIRE, THWN-2, or XHHW-2 (90 degree C) wet rated for use with 90 degree C listed terminals on PV equipment.

M. All exposed DC wiring to be USE-2, PVWIRE, or SE (90 degree C) wet rated and sunlight resistant or PV Wire.

N. Above ground exposed conduit shall be rigid galvanized steel with threaded fittings except where other applicable codes specifically allow for the use of EMT conduit. All conduit shall meet NEC Code and any applicable standards. Exterior installations shall have watertight fittings. All conduit shall be rated for exposed installation and a minimum design life equivalent to the solar panels. Paint all visible exposed raceways and boxes to match adjacent surface finish after

installation. Colors to be selected and approved by the Purchaser, such approval not to be unreasonably conditioned, delayed, or withheld.

O. Purchaser will furnish and install:

1. (3) 4" PVC PV conduit for the site PV interconnection to the MSB – click on the link here for location of these conduits https://drive.google.com/file/d/1wMqaXz6nWvVVauPDOiH6UhyKqB8xXLGv/view?usp=drive_link

2. (2) 2" PVC PV Canopy lighting conduits -click on the link here for the location of these conduits https://drive.google.com/file/d/1wMqaXz6nWvVVauPDOiH6UhyKqB8xXLGv/view?usp=drive_link

3. (2) 4" EMT conduits from the admin building roof top to MSB. These conduits are for or the Link Building interconnection to the MSB. Click on the link here for the location of these conduits https://drive.google.com/file/d/1wMqaXz6nWvVVauPDOiH6UhyKqB8xXLGv/view?usp=drive_link

   These conduits are to be installed in accordance with the Instruction Bulletin 024 and shall conform to all requirements as defined by the applicable codes, laws, rules, regulations, and standards of applicable code enforcing authorities, including but not limited tothe Local Electric Utility and Governmental Authorities.

P. All interior conduit to be EMT with steel set-screw fittings (no cast fittings).

2.03 WIRE MANAGEMENT

A. All inter-array wiring methods must meet or exceed current industry standards for wire management, strain relief and fastening.

B. All inter-array wire management shall use stainless steel or galvanized steel cable clips, Heyco or similar. UV rated cable ties shall be used minimally and only in locations where the use of cable clips is impossible.

C. Where exposed, wires, cables and conductors shall be managed in a neat and orderly manner. Where exposed to environmental conditions (e.g., sunlight, rain, wind, etc.) and visible from below, wires shall be fastened in a uniform and discrete fashion.

D. All conductors and conduits between separate arrays shall be routed underground. Wiring shall be routed down columns, encased in piers/caissons, routed underground between arrays or carports, and up the nearest column on the adjacent array. Under no circumstance shall circuits, conduits, or chaseways be mounted overhead between separate structures, including seismic gaps.

E. Strain relief and drip loops shall be utilized at all entrances to and from conduit bodies, junction boxes, weather heads, switchgear, inverters and panelboards etc. Conductors shall be strapped with strain relief as not to stress panel leads, home runs or mechanically crimped connections within the array.

2.04 MISC. SYSTEM REQUIREMENTS

A. All exterior equipment to be sunlight and UV resistant as well as rated for elevated

temperatures at which they are expected to operate (on roofs in hot sunlight).

B. No dissimilar metals are allowed to contact each other (use plastic or rubber washers) with the exception of anodized aluminum module frames in contact with galvanized carport purlins. Best practices shall be used to avoid corrosion.

C. No aluminum in contact with concrete or masonry materials.

D. Bolted connections shall be non-corrosive and include locking devices designed to prevent twisting over the design life of the PV system.

E. Environmental impact of system equipment containing hazardous materials shall be disclosed, as well as maintenance and disposal instructions for equipment at the end of its useful life.

2.05 SYSTEM ELECTRICAL

A. The modules shall be interconnected using cable assemblies. The pigtails shall be quick-connect electrical wiring connections rated for the application (90 degree C rated).

B. Raceway system shall be installed in a manner that prevents water from draining into electrical equipment.

C. Full specifications of the inverter shall be supplied as part of the system submittal.

D. All major components of the systems and the installation procedures shall meet National Electrical Code requirements, including Article 690.

E. The PV system shall be designed to automatically drop offline when normal utility power is lost to avoid unintentional islanding effects as required by the local utility. Exceptions may be made by Purchaser where PV system is part of an emergency power/battery backup allowed by Utility and AHJ.

F. All electrical system equipment shall be properly rated to withstand and interrupt (in the case of over current protection devices) the available fault current at the point of use.

G. All required overcurrent protection and electrical bussing sizes per NEC 690.

H. Means of system grounding to be approved by professional Electrical Engineer of record and GFCI protection shall be in accordance with latest NEC requirements.

2.06 MONITORING

A. DAS - A Data Acquisition and Monitoring System (DAS) shall be provided for all points of interconnect. The system shall include, but not be limited to, the measurement, calculation, display, and reporting of the following items:

1. PV production in 15-min reporting intervals.
2. Energy consumption in 15-min reporting intervals.
3. Weather data in 15-min reporting intervals
4. System electrical functions (instantaneous and accumulated power output (kW and kWh), AC and DC system voltage and amperage, and peak value tracking with associated time stamps).
5. Pounds of CO_2 emissions avoided from the generation of PV energy at the site (per NREL calculations).
6. DAS shall be capable of outputting data in the Western Renewable Energy Generation Information System (WREGIS) format sufficient for registering Renewable Energy Credits (RECs) from each system.
7. Lifetime logging and access to data reported by DAS.
8. DAS shall provide Purchaser access to all data through an open data exchange protocol (File Transfer Protocol (FTP) Push or Application Programming Interface (API)) at no additional cost to Purchaser or Purchaser's third-party designee. This data shall, at a minimum, include PV production data, energy consumption data, inverter production data, inverter AC power data, inverter current data, inverter voltage data, weather station and/or satellite data, and

alarm status readings. All data shall be available over multiple timescales, ranging from 15-min intervals to annual intervals and shall include both real-time and historic data.

B. Cellular data shall be used for communications with the DAS and metering systems. In the absence of cellular service availability, the Purchaser may, at its own discretion, provide internet connections on a site-by-site basis.

C. A separate consumption meter shall be provided for the utility account that the PV system is interconnected with. Consumption meters shall include a web-enabled interface and 15-min reporting intervals to be synced with PV meter production intervals. Consumption meter standard assumption is 480V Point of Interconnection (POI), assumption for anything above 480V POI without a storage component will be monitored at additional cost.

D. Provider shall load software (as applicable) on Purchaser provided computers and train Purchaser in operation and maintenance of software or cloud-based systems and related monitoring functions.

E. WEATHER STATION

1. A weather station shall be provided at one site out of five (with a minimum of one) in the Purchaser's portfolio of Systems, located geographically to best provide coverage for the portfolio of sites being considered. The station shall provide at a minimum: solar irradiation (coplanar and horizontal), ambient temperature, wind speed and any other data relevant to weather correction of solar PV system performance.

2. Alternatively, satellite weather may be utilized in lieu of on-site weather stations. If utilized in place of a weather station, satellite weather information shall be made available on the same interval as PV production at no additional cost to Purchaser per Item A above.

PART 3 - EXECUTION

3.01 REQUIRED PLACARDS

A. All placards shall be machine generated phenolic type with red background and white lettering, affixed to equipment with stainless steel screws or with permanent adhesive where set screws are not feasible. Minimum lettering size to be 1/4" unless otherwise noted or required for legibility.

B. Provide a placard clearly visible at each main service panel to identify both sources of power, with the following wording in 1/4" high lettering per NEC 690.64(B)(4): "Warning - This Service Is Fed by Two Sources Of Power – The Utility Service Main Disconnect And The PV System Main Disconnect – Both Services Must Be Disconnected To Remove Power From The Switchboard".

C. Provide a placard on each PV system input circuit breaker (where used) at the main panel with the following wording in 1/4" high lettering per NEC 690.64(B)(7): "Warning – Inverter Output Connection – Do Not Relocate This Overcurrent Device".

D. Provide a placard on all disconnects with the following wording in 1/4" high lettering per NEC 690.17: "Warning - Electric Shock Hazard - Do Not Touch Terminals - Terminals On Both The Line and Load Sides May Be Energized In The Open Position".

E. Provide a placard on the Main PV System Disconnect (adjacent to each main service panel) with the following information in 1/4" high lettering per NEC 690.53: "Photovoltaic Power Source Disconnect - Operating Current: X Amps; Operating voltage: XX VAC; Maximum System Voltage: XX VAC; Short-Circuit Current: XXX Amps", where X is the operating current, XX is the system voltage, and XXX is the maximum short circuit current contribution of the generating facility at the point of interconnection with the utility system.

F. Provide a placard at each Main Switchboard with the following information in 1/4" High lettering per NEC 690.54: "Caution - Possible Backfeed From Photovoltaic Power System – X VAC, XX Amps", where X is the system voltage and XX is the maximum AC amperes of the installed system.

G. Provide a placard on each PV System Inverter with the following information in 1/4" high lettering: "Photovoltaic Power Source Inverter Rating - Operating Current: XX Amps; Operating voltage: XXX VDC; Maximum System Voltage: 1,000 VDC; Short-Circuit Current: XXXX Amps", where XX is the maximum DC amperes of the installed system, XXX is the operating voltage DC, and XXXX is the short circuit current that the Inverter can provide (from all strings in parallel).

H. Provide utility-required System Directory placard and utility safety switch Identification placard as required by local utility company, to identify all system components.

I. Provide a placard for all Combiner Boxes to read: “DC Combiner Box [XXX]– [*System Voltage*] VDC Maximum”.

3.02 UTILITY INTERCONNECTION

A. The Provider shall complete the submissions for the utility interconnection agreement with the Purchaser’s approval. The Provider shall submit the required authorization form with the utility to act on behalf of the Purchaser. In the event that the Purchaser has already submitted interconnection applications, the Provider shall take all responsibility for the interconnect process upon contract execution.

B. The PV system at each Site shall not be interconnected with the Utility’s distribution facilities until written authorization from the Utility Company has been obtained. Unauthorized interconnections may result in injury to persons and damage to equipment or property for which the installing Provider may be liable.

3.03 INSTALLATION STANDARDS

A. System Installation shall conform to the equipment manufacturers Installation Manual(s) and requirements or guidelines.

B. All Local, State, and NEC codes shall be observed, including all industry standards related to the installation, operation, and maintenance of photovoltaic power systems.

3.04 TESTING

A. Photovoltaic modules shall be tested in the factory for design performance and results shall be included in the Operation and Maintenance manuals.

B. Inverters shall be factory tested for performance and the results shall be included in the Operation and Maintenance manuals.

C. System testing of the installed photovoltaic array shall be performed on all system strings and recorded in commissioning documentation and the Operation and Maintenance manuals.

D. Commissioning of PV Systems shall adhere to IEC 62446-1 requirements and shall include the following at a minimum:

1. CONDUCTORS
    a. AC & DC conductor inspection / megger testing
    b. Wire management check
    c. DC string *V*oc & *I*sc testing and recording when possible
    d. Confirm all conduits & junction boxes are installed properly/watertight
2. Inspection of DC fusing and disconnects
3. Inspection of AC components: AC Disconnect, Main Switch Board, AC Combiner Panel Boards, Breakers, Fuses, Terminations, Phasing, OCPD operation, etc.
4. Grounding & bonding system inspection and continuity testing
5. INVERTERS
    a. Inverter inspections and tests per manufacturer instructions
    b. Inverter start-up and confirm proper inverter settings
    c. Inverter output tests - Confirm PV system AC output as expected based on design, insolation and inverter readings
6. IV Curve Trace, Performance testing and recording when possible
7. THERMAL IMAGING
    a. Check all electrical components while systems are energized
    b. Spot check, Modules, Inverters, Disconnects, AC system, etc.
8. Torque spot check on mechanical and electrical terminations
9. Inspection of corrosion control measures
10. Confirm signage and placards meet plans
11. Workmanship evaluation
12. Inspection of DAS / CT metering and monitoring equipment
13. Weather station component inspection and performance audit
14. Confirm web-based monitoring interface operations
15. LIGHTING CONTROLS.
    a. Provider is connecting canopy lighting to Purchaser-provided circuitry.
    b. Lighting fixtures shall include local dimming and photocell controls.
    c. Confirm canopy lighting levels match the photometric design provided by Purchaser.
    d. Verify component installations
    e. Confirm lighting controls function as specified
16. Commissioning of any other major electrical infrastructure installed on the project by Provider per manufacturer requirements.
17. Medium voltage equipment tested to ANSI/NETA requirements

E. Testing to be performed per CPUC Electric Rule 21 testing procedures and requirements. All testing to be done on "no-cloud" days to avoid system fluctuation by passing clouds. Provider to provide all testing and certification / commissioning.

F. System start-up procedure shall be as outlined by the Manufacturer's Installation Manual(s).

3.05 DOCUMENTATION

A. All commissioning and testing reports shall be provided to the Purchaser within 15 days of completion of testing.

B. The Provider shall submit to the Purchaser a comprehensive Operations and Maintenance (O&M) Manual with details for each system. O&M Manuals shall be compiled as a single, bookmarked portable document format (PDF) file. The document shall be a well-organized, comprehensive and custom document created with details for each site. The document shall include at a minimum the following:

1. System description and overview
2. Simplified site plan that shows array naming convention, inverter locations, and disconnects
3. Safety Details, including shut down procedures
4. Contact information for the system installer and maintenance personnel
5. Monitoring system login and operation details
6. Standard procedures for both Purchaser and O&M personnel
7. Maintenance information, including schedules and responsibilities for ongoing maintenance.
8. Troubleshooting and repair, including responses to typical issues and responsible parties.
9. Summary of Performance Guarantee on a site-by-site basis, inclusive of COD for each site, reporting dates and true-up dates.
10. Summary table with the following details for each site: Site, System Size, Permission-to-Operate (PTO), Commercial Operation Date (COD), Final Completion Date, AHJ Closeout Date
11. Any other information that may be required for the Purchaser to easily and safely interact with, confirm performance, troubleshoot, maintain and/or service the materials and equipment installed under this Contract.
12. O&M Attachments shall include:
    a. Permission-to-Operate (PTO) notice and any other pertinent Utility documentation
    b. As-built Record Drawings in both AutoCAD and PDF (single compiled file for each site), provided as separate files from the fully compiled O&M Manual PDF. The updated as-built drawings shall also include the following details:
        i) DC string maps with corresponding inverter nomenclature (ID), locations, serial numbers, azimuth, and tilt.
        ii) Data logger make, model and serial number
        iii) Include all horizontal/directional boring logs and column footing depths
    c. Performance Guarantee (PeGu) with as-built details.

d. Performance Data, Modeled As-built, including expected production over time. Electronic 8760 production and insolation data shall also be provided in spreadsheet format.
e. Material List - Complete material list of all items furnished and installed, including but not limited to the following: PV Modules, inverters, wiring, combiner boxes, panelboards, switch gear, optimizers, disconnects, boxes, metering and DAS equipment, etc. PV System operation details
f. All warranties, cut sheets and manuals for major equipment
g. System testing and commissioning documentation

END OF SPECIFICATION SECTION 26 60 00

Schedule 12 – Solar Photovoltaic Roof Mount Specifications

PART 1 - GENERAL

1.01 RELATED DOCUMENTS

A. The Contract and any design-build bridging documents

B. Section 26 00 00: General Electrical Specifications

C. Section 26 60 00: Photovoltaic System Specifications

D. Section 05 09 02: Solar Photovoltaic Canopy Structures

E. Other relevant Purchaser Specifications

NOTE: Where this specification and other specifications or bridging documents are in conflict, the more stringent shall apply. Provider shall identify conflicts and confirm recommended equipment or procedures with the Purchaser.

1.02 CODES & REFERENCES

A. The design and installation shall conform to all requirements as defined by the applicable codes, laws, rules, regulations and standards of applicable code enforcing authorities (Latest Edition unless otherwise noted). The following are key standards that shall be followed. The Provider shall ensure all applicable codes are followed:

1. Aluminum Association (AA) (www.aluminum.org) - Aluminum Standards and Data, 2003 Edition.
2. ASTM International (ASTM) (www.astm.org):
   a. A484/A484M-16 – Standard Specifications for General Requirements for Stainless Steel Bars, Billets, and Forgings.
   b. A554-16 – Standard Specification for Welded Stainless Steel Mechanical Tubing.
   c. A555/A555M-16 – Standard Specification for General Requirements for Stainless Steel Wire and Wire Rods.
   d. B85-03 - Standard Specification for Aluminum-Alloy Die Castings.
   e. E2766-13 - Standard Practice for Installation of Roof Mounted Photovoltaic Arrays on Steep-Slope Roofs
   f. E3010-15 - Standard Practice for Installation, Commissioning, Operation, and Maintenance Process (ICOMP) of Photovoltaic Arrays
   g. F836M-02 (2015) – Standard Specification for Style 1 Stainless Steel Metric Nuts (Metric).
   h. F880-12 – Standard Specification for Stainless Steel Socket, Square Head, and Slotted Headless-Set Screws.
3. American National Standards Institute (ANSI)
4. American Society of Civil Engineers (ASCE), Minimum Design Loads and Associated Criteria For Buildings And Other Structures (7-16)

5. California Building Code (CBC), with State of California Amendments
6. California Energy Commission Title 24 Building Energy Efficiency Requirements
7. California Department of Forestry and Fire Protection, Office of the State Fire Marshal – Solar Photovoltaic Installation Guidelines
8. California Office of Statewide Health Planning and Development (OSHPD)
9. Local and State Fire Code
10. Purchaser Specifications and Requirements
11. Factory Mutual (FM)
12. Institute of Electrical and Electronics Engineers (IEEE)
13. National Electrical Manufacturers Association (NEMA)
14. National Fire Protection Association (NFPA), National/CA Electrical Code
15. Occupational Safety and Health Administration (CAL_OSHA)
16. Underwriters Laboratory (UL), including:
    a. UL 2703 – Standard for Mounting Systems, Mounting Devices, Clamping/Retention Devices, and Ground Lugs for use with Flat-Plate Photovoltaic Modules.
17. Utility company standards and requirements
18. All other applicable Codes and Ordinances

1.03 GENERAL

A. “Purchaser” shall refer to owner of the site where project will be located, regardless of system ownership, and include any representative of the site owner, such as consultants or inspectors. “Contract” refers to the design-build or construction contract and any associated design-build bridging documents. “Provider” refers to the entity performing the work, inclusive of Engineer and Architect of Record for design-build contracts.

A. This section describes requirements for solar photovoltaic system mounting on roofs, including design requirements.

B. The Provider shall include all work reasonable inferred by these specifications and the design-build bridging documents, to comply with applicable codes, and to provide complete PV mounting systems acceptable to Authorities Having Jurisdiction (AHJs).

C. The Provider shall coordinate with the respective utility company for the installation of each PV system and incorporate all related utility requirements into the design of the system.

D. The Provider shall prepare complete drawings and specifications and all final approvals necessary to commence the work. Provide all engineering design services and complete coordination with other disciplines, trades, utility companies, labor, materials, apparatus, tools, equipment, transportation, temporary construction and power and special or occasional services as required to provide complete PV mounting systems at each location.

E. The structural mounting designs shall be fully developed at 90% CDs and fully coordinated with the purchaser AOR. Locate, layout and identify means of attachment for all equipment. The site, plans, elevations, schedules and detail

drawings must be sufficiently developed to reflect the overall system design. Provide arrangement of equipment, including attachment details and structural calculations for all roof mounted PV modules, inverters and any other balance-of-system items mounted on the roof, and conduit/conductor routing.

F. EXCLUSIONS AND SUBSTITUTIONS

1. The Provider shall be allowed freedom to pursue a Fire and any other AHJ approved design toward the Purchaser's benefit with respect to cost and performance.
2. Base design shall be based on the general systems described herein and in any bridging documents. The Provider may offer alternatives, substitutions, or exclusions in any area of the work, provided that each case is clearly described with the benefits noted and that all other applicable Purchaser specifications are met. This applies to systems, methods, equipment and material for which such alternatives or substitutions would, in the Provider's opinion, be beneficial to the projects and the Purchaser, so far as safety, health, and comfort of occupants are satisfied and the requirements of Codes are met.
3. Burden of proof of equality of any substitution for a specified product is the responsibility of the Provider.

1.04 WORK INCLUDED

A. The scope of work shall include the design of the roof mounted PV system, means of attachment, materials, equipment, fabrication, installation and tests in conformity with applicable codes, professionally recognized standards and authorities having jurisdiction.

B. Provide all required construction documents and compliance documentation.

C. Provide all materials, labor, equipment, services, power, lighting, and incidentals necessary to install the PV mounting systems as shown on the drawings and as specified hereinafter.

D. Coordinate with Client, Client's agent, and roofer for any required blocking prior to roof decking installation. Additional blocking installation will not be allowed after roof is installed. If Provider will not be installing the blocking, the Provider shall provide detailed designs, drawings, and engineering for the blocking installation.

E. Provide coordination with roofer/roof warranty holder. Provide waterproofing details to Client and roofer and ensure all work maintains roof warranty, inclusive of having roof warranty holder provide waterproofing where required by the warranty.

F. Include all required incidental work, such as pull tests, blocking, lashing, sealing, fire stopping, waterproofing, roof repair, commissioning, and testing.

G. Include any other electrical, roof attachment or PV support structure work as might reasonably be implied as required, even though not specifically mentioned herein or shown on the drawings.

1.05 DESIGN PROCEDURE & REQUIREMENTS

A. Engineering calculations, drawings and specifications shall be prepared and signed by a Structural Engineer, registered in the State of California and regularly

employed in the design of photovoltaic electrical systems on roofs for California projects. Structural Engineer shall be the Engineer of Record as required by code-enforcing authorities. The Engineer of Record shall provide required statements and certifications.

B. Structural design shall be complete and comply with all requirements specified, including materials, workmanship and performance. System shall be designed such that it does not negatively affect the structural integrity of the roof given dead loads, wind loads, and seismic loads.

C. The design and installation of solar systems on roofs shall adhere to the California State Fire Marshal Solar Photovoltaic Installation Guideline.

D. Design of racking structures and the subsequent installation of the PV system and all ancillary equipment shall provide adequate room for access to and inspection/maintenance of existing equipment on the building roofs. A minimum of three feet of clearance will be provided between PV equipment and existing mechanical equipment and other equipment mounted on the roof or as required by code. A minimum of four feet of clearance shall be provided between PV equipment and the edge of the roof or as designated by the local AHJ. Clearance guidelines of the AHJs shall be followed. In the event of conflicting requirements, the greater clearance requirement shall be used.

E. ROOF PENETRATIONS OR ATTACHMENTS

1. Penetrations should be minimized within code requirements. All penetrations shall be waterproofed. Work shall be performed by an experienced and licensed roofer, who regularly engaged in the waterproofing of roof penetrations for the type of roof and is subject to approval by the Purchaser. Provider shall perform all work so that existing roof warranties shall not be voided, reduced, or otherwise negatively impacted.
2. Detail(s) for the sealing of any roof penetrations shall be approved in writing by the Purchaser/Purchaser's Representative, as well as the manufacturer of the existing roofing system, as part of system design review and approval – prior to Design-Builder proceeding with work.
3. Details for any required blocking and/or roof penetrations shall be coordinated with projects AOR and SEOR and approved in writing by the Purchaser/Purchaser's Representative, additionally the details should not compromise the roofing warranty in any way shape or form. Provider shall work with pre-approved roofing Provider for installation of any roof penetrations. Design-Builder shall coordinate with the Provider for the roof and/or building to ensure the blocking details, including location, materials and construction, are known prior to roof construction. Details will be provided to the Purchaser for coordination with the 90% drawings. Rework resulting from failure to provide said details to the parties listed above will result in payment rework by the PV Provider. All roof penetration shall be installed at the time of steel erections.

F. The PV equipment shall not be installed in a way that obstructs air flow into or out of building systems or equipment.

G. No work shall compromise roof drainage, cause damming or standing water or cause excessive soil build-up.

H. All materials and/or sealants must be chemically compatible. Special attention shall be paid to avoiding dissimilar metal contact and minimizing corrosion.

I. Designs shall account for thermal movement and any thermal/seismic joints on buildings. Thermal movement that causes scuffing to the roof must be mitigated as part of the mounting solution.

J. Flat and low slope roofs

1. Shall have a minimum of a 6-inch standoff. Purchaser may consider ballasted or hybrid ballasted/attached racking systems.
2. Design shall minimize interrow shading
3. Panel tilt shall be a minimum of 10 degrees

K. The installation of PV modules, inverters and other equipment on building roofs will be designed to minimize visibility of the equipment from the ground as feasible.

L. Coordinate design with Drawings and other design engineers and disciplines to ensure completely coordinated construction documents. Lay out equipment in a manner to provide code compliant and manufacturer recommended access for servicing, maintenance, inspection, and testing of PV system and for other equipment, vents, etc. in the vicinity of the system

M. Conditions at Site: Provider is responsible for familiarizing themselves with all discernible site conditions and no extra payment will be allowed for work required because of these conditions, whether specifically mentioned or not. All dimensions, partitions, etc. are to be verified at site by the Provider. Before ordering any material or closing in any work, Provider is responsible for verifying all measurements at each project site. Any differences found between dimensions on the drawings and actual measurements shall be brought to the Purchaser's attention for consideration before proceeding.

N. DEAD LOAD, WIND LOADING AND SEISMIC DESIGN

1. Roof-mounted arrays, inclusive of inverters and other electrical equipment may not exceed 5 lbs. per square foot.
2. Systems shall not exceed the ability of the existing structure to support the entire solar system and withstand increased wind uplift and seismic loads. The capability of the existing structure to support proposed solar systems shall be verified by a licensed structural engineer prior to design approval.
3. Comply with all applicable codes and standards and provide wind load restraints for all equipment installed under this contract that requires restraint. The photovoltaic array wind loading restraint shall be designed as required by wind tunnel data and other AHJ requirements.
4. The photovoltaic array shall be designed to accommodate lateral displacement in the event of an earthquake based on a nonlinear response-history seismic analysis for the appropriate seismic zone.

O. PERMITS AND INSPECTIONS

1. The Provider shall obtain all required permits and arrange for all required inspections including utility requirements, inspections, and sign-offs.

2. Provider shall not allow or cause any of the work to be covered or enclosed until it has been tested and/or inspected.

1.06 SUBMITTALS

A. Submit each item in this Article according to the Conditions of the Contract.

B. Design Drawings: For design-build projects, prepare working drawings that shall include but not be limited to the following:

1. Complete racking and module layout designs, inclusive of roof plans showing locations of photovoltaic attachment devices on roof with attachment details and spacing.
2. Equipment mounting details
3. Inverter and any other balance of system mounting details and layout, inclusive of conduit/conductor routing.
4. Equipment space layouts and clearances
5. Details of waterproofing for any penetrations

C. Roofing Warranty: Signed certificates from the roofing manufacturer/warranty holder stating:

1. Roofing Provider is certified installer of Complete Roofing System.
2. Manufacturer’s Technical Representative is qualified and authorized to approve project.
3. Project plans and specs meet the requirements of the warranty of the Complete Roofing System for the specified period.
4. Existing warranty incorporates the new roofing work and flashing work.

D. Shop Drawings: Submit shop drawings indicating profiles, sizes, connection attachments, reinforcing, anchorage, size and type of fasteners accessories. Include erection drawings, elevation and details where applicable.

E. PRODUCT DATA

1. Complete material list of all items proposed to be furnished and installed under this Section, including but not limited to the following items: stanchions or attachments, stanchion or attachment hardware including; means of structural attachment to building framing and racking systems, flashing, PV rails, PV module attachment hardware, WEEBS, etc.
2. Manufacturers' specifications and other data required to demonstrate compliance with the specified requirements.
3. Manufacturers' recommended installation procedures which, when approved by the Purchaser, shall become the basis for inspecting and accepting or rejecting actual installation procedures used on the work.
4. Samples of all attachment hardware

F. Test Results: In-situ pull-test or other testing results where required by AHJ.

G. AS-BUILTS

1. Maintain "as-built" records at all times, showing the exact location of racking system, including concealed conduits and feeders installed under this contract.
2. Upon completion of work and before acceptance can be considered, the Provider must forward to the Purchaser, a corrected set of plans to show the mounting system work as installed in both PDF and CAD format.
3. Comply with additional “As-built” requirements in other sections of the Specifications.

PART 2 - PRODUCTS

2.01 MANUFACTURER QUALIFICATIONS:

A. All equipment shall be from a manufacturer specializing in production of roof attachment products and racking materials of the type specified with a minimum of 5 years documented experience.

B. Supply all new equipment and accessories free from defects and listed by Underwriter's Laboratories, Inc., or bearing its label or label of a Nationally Recognized Testing Laboratory (NRTL).

C. All items of a given type shall be the products of the same manufacturer.

2.02 All racking and attachment materials shall be aluminum or stainless steel, with suitable corrosion resistance. Where no alternative to aluminum and steel are available, product can be composite and non-metallic.

2.03 CUSTOM FABRICATION

A. MATERIALS

1. Steel Sections: ASTM A36.
2. Steel Pipe: ASTM A53, Type E or S, Grade. B.
3. Steel Bolts, Nuts, and Washers: ASTM A307.
4. Welding Materials: AWS D1.1; type required for materials being welded.
5. Galvanizing: Hot-dip process ASTM A123 typical and ASTM A153 for threaded fasteners performed after fabrication into largest practical section. Weight of coating not less than 2 oz. per sq. ft. of surface. Where damaged, repair surface with one coat of hot process galvanizing repair compound, "Galvalloy," Galvweldalloy," or approved equal.
6. Primer: Tnemec Company "Series V10 Red Primer," Sherwin-Williams "Steel Spec Universal Primer," or approved equal.
7. Dissimilar Materials: Separate dissimilar surfaces in contact with or in close proximity to non-compatible metals, concrete masonry, or plaster with neoprene gasket; or other approved means.

B. FABRICATION

1. Verify dimensions on site prior to shop fabrication.
2. Fabricate items with joints tightly fitted and secured.
3. Fit and shop assemble in largest practical sections, for delivery to jobsite.
4. Grind exposed welds flush and smooth adjacent finished surfaces. Ease exposed edges to small uniform radius.
5. Exposed Mechanical Fastenings: Flush countersunk screws or bolts; unobtrusively located; consistent with design of structure, except where specifically noted otherwise.
6. Make exposed joints butt tight, flush and hairline.
7. Supply components required for anchorage of metal fabrications. Fabricate anchorage and related components of same material and finish as metal fabrication, except where specifically noted otherwise.

C. FINISH

1. Clean surfaces of rust, scale, grease, and foreign matter prior to finishing.

2. Do not prime surfaces in direct contact bond with concrete or where field welding is required.
3. Prime paint interior items with one coat unless scheduled to be galvanized.
4. Galvanize exterior items and scheduled interior items to minimum 2.00 oz/sq ft zinc coating.

PART 3 - EXECUTION

3.01 ROOFING

A. Provider shall perform all work such that existing roof warranties shall not be voided, reduced, or otherwise negatively impacted.

B. Provider is responsible for providing equipment for roof access.

C. Waterproofing shall be performed by the entity holding the roof warranty or approved by that entity. Provider shall coordinate and ensure adherence to this requirement.

D. Provider shall document condition of roofing with roofing representative and Purchaser prior to beginning work.

E. Any damage to roofing material during installation of solar systems shall be remedied by Provider and approved by roof warranty holder and Purchaser.

3.02 INSTALLER QUALIFICATIONS:

A. Installer to be certified in solar PV roof attachment products and racking installation with a minimum of 5 years documented experience.

B. Where manufacturer certifies installers, installer shall possess certification from the manufacturer’s products being installed.

3.03 STANDING SEAM ATTACHMENT

A. Examination: Prior to beginning installation, verify that:

1. Panel seaming or fastening is complete.
2. Roof panel attachment is sufficient to withstand loads applied by the photovoltaic attachment system, photovoltaic system and associated components.
3. Where required, ensure pull tests have been completed and pass requirements.
4. Installation will not impede roof drainage.

B. PREPARATION

1. Clean areas to receive attachments; remove loose and foreign matter that could interfere with installation or performance.

C. INSTALLATION

1. Install system in accordance with manufacturer's instructions and approved Shop Drawings.
2. Place clamps as required by PV layout and in-service loads.
3. Install with careful consideration of aesthetics to ensure alignment of modules and fasteners. Place clamps in straight, aligned rows.
4. Tighten set screws to manufacturer's recommended torque. Verify set screw torque using calibrated torque wrench.

3.04 PENETRATING ATTACHMENT

A. PREPARATION

1. Prior to beginning installation, verify that installation will not impede roof drainage.
2. Locate mount placements per design over rafter, blocking or designated attachment points.
3. Clean areas to receive attachments; remove loose and foreign matter that could interfere with installation or performance.
4. Utilize certified roofer approved by roof warranty holder to expose attachment points.

B. INSTALLATION

1. Using the base as a template, mark the penetration points.
2. Drill pilot holes perpendicular and centered on rafter or designated attachment with appropriate size bit. Fill pilot holes with a sealant compatible with roofing materials.
3. Attach base to roof with specified lag bolts or other approved fastening method.
4. Attach any hardware to the top of the post/attachment. Seal top of post/attachment from weather exposure
5. After inspection of attachment, install appropriate waterproofing in accordance with roof warranty requirements. Utilize certified roofer approved by roof warranty holder.

3.05 CUSTOM FABRICATED PENETRATING ATTACHMENTS

A. PREPARATION

1. Follow preparation requirements per Penetrating Attachment listed above.
2. Obtain Purchaser's Representative approval prior to site cutting or making adjustments not scheduled.
3. Clean and strip primed steel items to bare metal where site welding is scheduled.
4. Make provision for erection loads with temporary bracing. Keep work in alignment.
5. Supply items required to be cast into concrete with setting templates, for installation under appropriate Sections.

B. INSTALLATION

1. Install items plumb and level, accurately fitted, free from distortion or defects.
2. After installation, touch-up field welds, scratched or damaged surfaces with primer, except repair exposed galvanized work (not to be painted) with hot process field galvanizing, in accord with manufacturer's published directions.
3. After inspection of attachment, install appropriate waterproofing in accordance with roof warranty requirements. Utilize certified roofer approved by roof warranty holder.

3.06 RACKING

A. Follow manufacturer instructions for installation. Utilize a calibrated torque wrench and verify torque of fasteners to manufacturers requirements.

B. Perform and obtain approval for all required field testing of attachment devices and racking as required by manufacturer, AHJ and building codes.

END OF SPECIFICATION SECTION 05 90 04

Schedule 13 – Solar Photovoltaic Canopy Structure Specifications

SPECIFICATION SECTION 05 90 02: SOLAR PHOTOVOLTAIC CANOPY STRUCTURES

PART 1 - GENERAL

1.01 RELATED DOCUMENTS

A. The Contract and any design-build bridging documents

B. Section 26 00 00: General Electrical Specifications

C. Section 26 60 00: Photovoltaic System Specifications

D. Section 05 09 04: Solar Photovoltaic Roof Mounting

E. Other relevant Purchaser Specifications

NOTE: Where this specification and other specifications or bridging-documents are in conflict, the more stringent shall apply. Provider shall identify conflicts and confirm recommended equipment or procedures with the Purchaser.

1.02 CODES & REFERENCES

A. The design and installation shall conform to all requirements as defined by the applicable codes, laws, rules, regulations and standards of applicable code enforcing authorities (Latest Edition unless otherwise noted). The following are key standards that shall be followed. The Architect/Engineer of Record and Provider shall ensure all applicable codes are followed:

1. Aluminum Association (AA) (www.aluminum.org) - Aluminum Standards and Data, 2003 Edition.
2. ASTM International (ASTM) (www.astm.org), including:
   a. A6, Standard Specification for General Requirements for Rolled Structural Steel Bars, Plates, Shapes, and Sheet Piling
   b. A36, Standard Specification for Carbon Structural Steel
   c. A123, Standard Specification for Zinc (Hot-Dip Galvanized) Coatings on Iron and Steel Products
   d. A653, Standard Specification for Steel Sheet, Zinc-Coated (Galvanized) or Zinc-Iron Alloy-Coated (Galvannealed) by the Hot-Dip Process
   e. E3010, Standard Practice for Installation, Commissioning, Operation, and Maintenance Process (ICOMP) of Photovoltaic Arrays
3. AISC Manual of Steel Construction
4. AISI Specifications for the Design of Cold Formed Steel Members
5. American National Standards Institute (ANSI)
6. American Society of Civil Engineers (ASCE), Minimum Design Loads and Associated Criteria for Buildings And Other Structures (7-16)
7. California Building Code (CBC), with State of California Amendments
8. California Energy Commission Title 24 Building Energy Efficiency Requirements
9. California Department of Forestry and Fire Protection, Office of the State Fire Marshal – Solar Photovoltaic Installation Guidelines
10. California Office of Statewide Health Planning and Development (OSHPD)
11. Local and State Fire Code
12. Purchaser Specifications and Requirements

13. Institute of Electrical and Electronics Engineers (IEEE)
14. National Electrical Manufacturers Association (NEMA)
15. National Fire Protection Association (NFPA), National/CA Electrical Code
16. Occupational Safety and Health Administration (CAL_OSHA)
17. Research Council on Structural Connections (RCSC)
18. Underwriters Laboratory (UL), including:
    a. UL 2703 – Standard for Mounting Systems, Mounting Devices, Clamping/Retention Devices, and Ground Lugs for use with Flat-Plate Photovoltaic Modules.
19. Utility company standards and requirements
20. All other applicable Codes and Ordinances

1.03 GENERAL

A. "Purchaser" shall refer to owner of the site where project will be located, regardless of system ownership, and include any representative of the site owner, such as consultants or inspectors. "Contract" refers to the design-build or construction contract and any associated design-build bridging documents. "Provider" refers to the entity performing the work, inclusive of Engineer and Architect of Record for design-build contracts.

B. The Provider shall include all items and all work reasonable inferred by these specifications and the Contract for compliance with all applicable structural codes. If the Provider is in doubt as to the intent of any portion of these specifications and the Contract, or necessary information is omitted, the Provider shall notify the Purchaser in writing for clarifications or corrections to be provided by addendum.

C. All design documents, cut sheets, and technical specifications shall be submitted, reviewed and accepted by the Purchaser per the guidelines specified in the Contract.

D. General Specifications as described in Section 26 00 00: General Electrical Specifications, are referred to herein and shall apply to this specification. Section 26 00 00 shall be deemed to supersede this specification in the case of conflicts.

1.04 WORK INCLUDED

A. The work shall include the design and construction of the structural systems for solar PV canopies, in conformity with applicable codes and professionally recognized standards.

B. The structural design shall be fully developed, including descriptions and calculations for all structural components. The site, plans, elevations, schedules and detail drawings must be sufficiently developed to reflect the overall design per the Contract and as described in Section 26 60 00, Photovoltaic System Specifications. Clear-height of canopy above grade shall be clearly noted on the drawings for the low side of canopies at corners and at the minimum clear location between corners.

C. Provider shall provide all materials, labor, equipment, services, and incidentals necessary to install the structures at each Site as shown on the design drawings and as specified hereinafter.

D. Provider shall provide temporary power and lighting as required for construction.

E. Provider responsible for location of all underground utilities and infrastructure with the use of Ground Penetrating Radar (GPR) or equivalent technology.

F. Provider shall be responsible for prompt removal and disposal of spoils from all related construction activities.

1.05 DESIGN PROCEDURE & REQUIREMENTS

A. Engineering calculations, drawings and specifications shall be prepared and signed by a Structural Engineer, registered in the State of California and regularly employed in the design of solar canopy projects. Structural Engineer shall be the Engineer of Record as required by code-enforcing authorities. The Engineer of Record shall provide required statements and certifications.

B. All structural system components shall be designed and constructed to withstand the environmental conditions of the site to which they will be exposed. The mounting systems shall be designed and installed to resist dead load, live load, corrosion UV degradation, wind loads, and seismic loads appropriate to the geographic area over the expected life of the PV system, a minimum 25-years.

C. Purchaser, not Provider, shall be responsible for ADA compliance.

D. GEOTECHNICAL STUDY AND ANALYSIS

1. A geotechnical analysis performed by a licensed geotechnical engineering firm shall be used. The results of the analysis shall be used when designing the foundations for the structures on the Site.
2. At a minimum, the following should be included in the analysis:
    a. Review available geotechnical information. This may include past geotechnical reports, soils and geologic maps/literature, photographs, groundwater reports, water well data, etc.
    b. Coordination and mobilization of the geotechnical services team for subsurface exploration of the site. This shall include coordinating local utilities to mark any existing underground utilities.
    c. Study the site to determine the presence of faults, ground fissures, and other potential geologic hazards that could affect the structural design and construction of the facility.
    d. Drilling or digging of exploratory borings and pits. The amount and depth shall be determined by the Engineer of Record.
    e. Performance of cone penetration tests. The amount and depth shall be determined by the Provider.
    f. Laboratory testing of collected soil samples from the borings and test pits. An evaluation of the in-place moisture content and dry density, gradation, plasticity, consolidation characteristics, collapse potential, expansivity, shear strength, resistivity, chloride content, sodium sulfate content, and solubility potential (total salts) should be conducted.
    g. Analyze the corrosivity of the soil upon determination of a professional engineer. Include a recommendation for the type of cement to be used in concrete foundations. Also include recommendations for corrosion

protection for underground steel, including rigid metal conduit (such as the need for polyvinyl chloride [PVC] coating).

h. A detailed report shall be provided outlining the tasks performed and the results of the testing. Included in the report should be any recommendations for the foundation designs, structural support designs, corrosion protection, pile drive frequency, minimum pile size, and any geologic conditions that may prevent the development of the project. For ground mount systems, an opinion on the viability of driven piles as the PV racking supports should be provided.

1.06 PERMITS AND INSPECTIONS

A. Provider shall obtain all required permits and arrange for all required inspections, including utility company requirements, inspections, and sign-offs.

B. Do not allow or cause any of the work to be covered or enclosed until it has been tested and/or inspected.

PART 2 - PRODUCTS

2.01 SOLAR CANOPY STRUCTURES

A. The PV Canopies shall consist of interconnected structural steel columns and beams, purlins attached to cross beams and solar modules mechanically fastened to the purlins.

B. For mounting of Bi-facial PV modules, design of racking, fastening and structural support should adhere to specific means consistent and effective in supporting that type of module. Mounting should be structurally sound, taking into consideration all wind and seismic requirements. Array and racking design should allow maximum irradiance to the array.

C. COATINGS AND CORROSION CONTROL

1. Each canopy system and associated components must be designed and selected to withstand the environmental conditions of the site (e.g., temperatures, winds, rain, flooding, etc.) to which they will be exposed. The design life shall be a minimum of 25-years.
2. All structural members and racking installed outdoors shall be hot dipped galvanized steel.
   a. All galvanized structural components shall be hot-dipped galvanized in compliance with ASTM 123.
   b. All purlin framing members shall meet ASTM A653, minimum G90. If structure is in close proximity to a marine environment (within 1 mile), G120 or higher shall be installed per Engineer/Architect of Record's specification.
   c. Field cuts of galvanized materials shall be kept to a minimum. All galvanized materials cut during construction shall be field coated with a long-lasting rust inhibiting coating, color matched and intended for coating hot-dipped galvanized metal in outdoor settings.
3. All canopy bolts, nuts and washers, unless otherwise noted, shall be hot dip galvanized or stainless steel.

4. Particular attention shall be given to the prevention of corrosion at the connections between dissimilar metals.

D. All materials shall conform to the requirements, tolerances, etc. of the latest editions of the AISC Manual of Steel Construction, AISI Specifications, ASTM Standard Specifications.

E. All framing material shall be drained or have provisions to prevent water pooling on or within the framing member (weep holes).

F. FOUNDATIONS AND COLUMNS

1. In parking areas, concrete column foundations shall extend a minimum height of 30 inches above grade for protection of structural steel from vehicle strikes.
2. For canopies outside of parking areas, such as hardscape play areas or interior campus areas, foundations shall be flush to grade, with no concrete above-grade. Columns shall be painted yellow (on top of hot-dipped galvanizing) from grade up to 6-feet above grade and topped with a 3” wide band of outdoor rated reflective tape along the top edge of the paint.
3. All column anchor bolts shall be torqued per Engineer of Record requirements and marked once torqued. Nuts shall then be double nutted or ‘staked’ (threading irreversibly altered) to protect from structural compromise and vandalism.
4. All structural connections at the flanged base of columns shall be outfitted with metal pole skirts coated to match columns. Pole skirts shall have rounded corners. Alternatively, flange bases may be grouted at the approval of the Purchaser.
5. Provider’s scope assumes no required hard rock drilling, no shoring or de-watering for trenches or columns, an estimated required pier depth of 14’ and diameter of 30”, and that water mitigation such as casings or backfill will not be required. If soil conditions prove to be more adverse, requiring deeper or wider foundations, water mitigations, hard rock drilling, Provider shall not be responsible for such additional expenses. Provider shall demonstrate to Purchaser the added cost for such scope Such additional costs shall be handled in accordance with Schedule 2.

G. CANOPY

1. All canopies shall have a minimum clear height above grade of 12-feet at the lowest point of any structure or shall meet or exceed parking structure minimum clearance heights at the entrance of the structure. Provider is responsible for determining grade elevations under canopies and ensuring clear-heights are achieved. Clear heights shall be identified on drawings, including at all low side corners and at the point of minimum clearance on the low side.
2. All canopies to be co-planar and in alignment horizontally and vertically with adjacent arrays. Installations with slopes on the long axis or stair-stepping between adjacent arrays shall only be approved in writing by Purchaser. Top of column heights shall be shown in design drawings.
3. Canopies shall have a minimum tilt of two degrees (2°) and maximum tilt of ten degrees (10°).
4. Canopies placed in parking lots shall be clearly labeled with max clearance for vehicles at the low points. Labels shall be rated for long-term UV exposure with lifetime to match warranties specified for PV panels in Section 26 60 00. Minimum labeling along the long axis of the low-side of the carport shall be every 50 feet of canopy or 3 labels, whichever is

greater. Labeling shall also include the exterior corner of each canopy within a parking lot. Label should be easily visible from a vehicle.

H. ELECTRICAL CONDUITS

1. Electrical conduits extending from the canopy to grade are to be encased in the foundations, not mounted on the outside of finished piers.
2. All electrical connections between separate structures shall be underground. Overhead "jumpers" between structures shall not be permitted. Structures are considered separate wherever a gap exists between structural crossmembers that is not spanned by purlins.
3. Provider shall terminate the security camera conduits at a backbox in the PV canopy above the column where the conduits transition from underground. Provide spare conduits, backboxes, and underground pull boxes as noted in Schedule 6 *Security Camera Schematic sketch* for security cameras with conduits terminating at the following locations:
   a. Canopy Array A: 1 x 1" conduit;
   b. Canopy Array B: 1 x 1" conduit;
   c. Canopy Array D: 1 x 1" conduit;
   d. Canopy Array F: 1 x 1" conduit.

2.02 LIGHTING SYSTEMS

A. Purchaser shall furnish canopy lighting system fixtures for Provider's use when installing the PV System. The fixtures shall conform to all requirements as defined by the applicable codes, laws, rules, regulations, and standards of applicable code enforcing authorities, including but not limited to the Local Electric Utility and Governmental Authorities.

B. Lighting design and fixtures shall be approved by Purchaser and consistent with the lighting products and photometric requirements used at this site.

C. Provided lights and fixtures shall be guaranteed to not leak for a period of no less than 5 years and have at minimum 5-yr life for LED bulbs and a minimum 5-year product warranty.

D. Canopy lighting systems shall be designed to meet the Illuminating Engineering Society of North America (IESNA) requirements for parking lot areas, to meet or exceed minimum values and maximum uniformity ratios as listed in the IESNA criteria.

E. Lighting shall meet all Title 24 requirements for installations in California.

F. All lighting sources shall be LED type.

G. Lighting control system shall be connected to the existing lighting controls in each area.

H. Modify other existing lighting to coordinate with the new work and design, including reconnection of any existing downstream circuiting and controls to remain.

I. Provider shall provide wiring for power and lighting control to pullbox locations.

J. All lighting shall be 208V power.

K. Design shall cover all areas of the parking lots (in the area of the work) to leave no dark spots and meet IESNA and requirements for all areas

PART 3 - EXECUTION

3.01 SITE PREPARATION AND INSPECTION

A. Provider shall direct, oversee and inspect all site work related to photovoltaic structural installation. Site preparation shall be in accordance with final drawings and specifications provided by manufacturer.

3.02 INSTALLATION

A. Erect/stand structural steel with proper equipment and qualified installers.

B. Actively cooperate with other trades and provide incidental welding, connections, etc. for securement of work of others to structural steel framing.

C. Erect/stand temporary flooring, planking, and scaffolding necessary in connection with erection of structural steel or support of erection machinery. Use of temporary floors shall be as required by municipal or state laws and governing safety regulations. Hoist metal deck onto structural frame.

D. After erection, clean connections and abrasions to shop coat and spot paint with same primer used in shop.

E. Installation of the structural system and all components shall be in strict accordance with manufacturer's recommendations.

F. Post installation, Provider shall provide the materials and labor to grout the base of the column to produce a finished joint.

3.03 ERECTION TOLERANCES

A. Erection tolerances for structural steel work shall be in accordance with latest AISC "Code of Standard Practice for Steel Buildings and Bridges".

3.04 BOLTING

A. High strength steel bolts shall be used where indicated. Fabrication and erection shall be in strict accordance with the latest edition of "Specifications for Assembly of Structural Joints Using High-Strength Steel Bolts", as approved by the Research Council on Riveted and Bolted Structural Joints of the Engineering Foundation. Load indicator washer shall be used. Use beveled washers on sloping surfaces.

3.05 WELDING

A. Welding and welded joints shall be in accordance with AWS standards. Work shall be performed by operators who have been qualified by test in accordance with AWS D1.1, "Structural Welding Code – Steel", to perform type of work required for this project.

B. All methods, sequence, qualifications and procedures, including preheating, post heating, etc. shall be detailed in writing and submitted for review by the testing laboratory and results provided to Purchaser. Provisions shall be made in detailing

of lengths of members for dimensional changes as a result of shrinkage stresses so as to provide specified finished dimensions.

C. Remove all runoff tabs, and bottom backing bars. Top backup bars to be removed or have continuous fillet weld to column.

END OF SPECIFICATION SECTION 05 90 02

Schedule 14 50% Designs

SAN MATEO COUNTY MEDICAL CENTER
222 W 39TH AVENUE SAN MATEO, CA 94403

CALL 811 DIG ALERT PRIOR TO EXCAVATING:

COMPLIANCE WITH GOVERNMENT CODE 4216 IS TO BE FOLLOWED PRIOR TO ANY EXCAVATION TAKING PLACE.

VICINITY MAP



GOVERNING CODES:

CALIFORNIA CODE OF REGULATIONS:
2022 CALIFORNIA ADMINISTRATIVE CODE (CAC) ..... (PART 1, TITLE 24, CCR)
2022 CALIFORNIA BUILDING CODE (CBC), VOLUMES 1, AND 2 (PART 2, TITLE 24, CCR)
(2021 EDITION INTERNATIONAL BUILDING CODE WITH 2022 CALIFORNIA AMENDMENTS)
2022 CALIFORNIA ELECTRICAL CODE ..... (PART 3, TITLE 24, CCR)
(2020 EDITION NATIONAL ELECTRICAL CODE WITH 2022 CALIFORNIA AMENDMENTS)
2022 CALIFORNIA MECHANICAL CODE (CMC) ..... (PART 4, TITLE 24, CCR)
(2021 EDITION IAPMO UNIFORM MECHANICAL CODE WITH 2022 CALIFORNIA AMENDMENTS)
2022 CALIFORNIA PLUMBING CODE (CPC) ..... (PART 5, TITLE 24, CCR)
(2021 EDITION IAPMO UNIFORM PLUMBING CODE WITH 2022 CALIFORNIA AMENDMENTS)
2022 CALIFORNIA ENERGY CODE ..... (PART 6, TITLE 24, CCR)
(2021 EDITION CALIFORNIA ENERGY COMMISSION BUILDING ENERGY EFFICIENCY STANDARDS)
2022 CALIFORNIA FIRE CODE (CFC) ..... (PART 9, TITLE 24, CCR)
(2021 EDITION OF INTERNATIONAL FIRE CODE WITH 2022 CALIFORNIA AMENDMENTS)
2022 CALIFORNIA GREEN CODE ..... (PART 11, TITLE 24, CCR)
2022 CALIFORNIA REFERENCED STANDARDS CODE ..... (PART 12, TITLE 24, CCR)
NFPA 13 - 2022
NFPA 72 - 2022

REFERENCE CODE SECTIONS FOR APPLICABLE STANDARDS:

2022 CBC, CHAPTER 35
2022 CFC, CHAPTER 80

INSPECTIONS:

SAFETY DURING CONSTRUCTION TO COMPLY WITH 2022 CFC CHAPTER 33

NOTES:

1) NOTICE TO THE APPLICANT/OWNER/OWNER'S AGENT/ARCHITECT OR ENGINEER OF RECORD: BY USING THIS PERMITTED CONSTRUCTION DRAWINGS FOR CONSTRUCTION.INSTALLATION OF THE WORK SPECIFIED HEREIN, YOU AGREE TO COMPLY WITH THE REQUIREMENTS OF THE COUNTY OF LOS ANGELES FOR SPECIAL INSPECTIONS, STRUCTURAL OBSERVATIONS, CONSTRUCTION MATERIAL TESTING AND OFF-SITE FABRICATION OF BUILDING COMPONENTS, CONTAINED IN THE STATEMENT OF SPECIAL INSPECTIONS AND AS, REQUIRED BY THE CALIFORNIA CONSTRUCTION CODES.

2) LOCATIONS AND CLASSIFICATIONS OF EXTINGUISHERS SHALL BE IN ACCORDANCE WITH CFC 906 AND CALIFORNIA CODE OF REGULATIONS (CCR), TITLE 19.

3) DURING CONSTRUCTION, AT LEAST ONE EXTINGUISHER SHALL BE PROVIDED ON EACH FLOOR LEVEL AT EACH STAIRWAY, IN ALL STORAGE AND CONSTRUCTION SHEDS, IN LOCATIONS WHERE FLAMMABLE OR COMBUSTIBLE LIQUIDS ARE STORED OR USED, AND WHERE OTHER SPECIAL HAZARDS ARE PRESENT PER CFC SECTION 3315.1.

4) BUILDINGS UNDERGOING CONSTRUCTION, ALTERATION, OR DEMOLITION SHALL CONFORM TO CFC CHAPTER 33. WELDING, CUTTING, AND OTHER HOT WORK SHALL BE IN CONFORMANCE WITH CFC CHAPTER 35.

5) ADDRESS IDENTIFICATION SHALL BE PROVIDED FOR ALL NEW AND EXISTING BUILDINGS IN A LOCATION THAT IS PLAINLY VISIBLE AND LEGIBLE FROM THE STREET OR ROAD FRONTING THE PROPERTY. WHERE ACCESS IS BY WAY OF A PRIVATE ROAD AND THE BUILDING ADDRESS CANNOT BE VIEWED FROM THE PUBLIC WAY, AN APPROVED SIGN OR MEANS SHALL BE USED TO IDENTIFY THE STRUCTURE. PREMISES IDENTIFICATION SHALL CONFORM TO CBC SECTION 501.2.

6) DUMPSTERS AND TRASH CONTAINERS EXCEEDING 1.5 CUBIC YARDS SHALL NOT BE STORED IN BUILDINGS OR PLACED WITHIN 5 FEET OF COMBUSTIBLE WALLS, OPENINGS OR COMBUSTIBLE ROOF EAVE LINES UNLESS PROTECTED BY AND APPROVED SPRINKLER SYSTEM OR LOCATED IN A TYPE I OR TYPE IIA STRUCTURE SEPARATED BY 10 FEET FROM OTHER STRUCTURES. CONTAINERS LARGER THAN 1 CUBIC YARD SHALL BE OF NON-LIMITED COMBUSTIBLE MATERIALS OR SIMILARLY PROTECTED OR SEPARATED. CFC 304.3.

7) EXITS, EXIT SIGNS, FIRE ALARM PANELS, HOSE CABINETS, FIRE EXTINGUISHER LOCATIONS, AND STANDPIPE CONNECTIONS SHALL NOT BE CONCEALED BY CURTAINS, MIRRORS, OR OTHER DECORATIVE MATERIAL.

8) THE EGRESS PATH SHALL REMAIN FREE AND CLEAR OF ALL OBSTRUCTIONS AT ALL TIMES. NO STORAGE IS PERMITTED IN ANY EGRESS PATHS.

PROJECT DIRECTORY

SYSTEM HOST:	DEVELOPER	ELECTRICAL ENGINEER:	GENERAL CONTRACTOR
SAN MATEO COUNTY	**FOREFRONT POWER**	**HARDIN-DAVIDSON**	**COLLINS ELECTRICAL COMPANY, INC**
555 COUNTY CENTER FL. 2	100 MONTGOMERY ST #725	356 POLLASKY AVE	1902 CHANNEL DR
REDWOOD CITY, CA 94063	SAN FRANCISCO, CA 94104	STE 200	WEST SACRAMENTO, CA 95691
801.623.8234	530.961.2721	CLOVIS, CA 93612	916.567.1100
DESI GALLEGOS	BRENDAN MORAN	559.323.4995	MALY HER
		LOREN HARDIN	

ARCHITECT & DESIGN PROFESSIONAL IN CHARGE:	STRUCTURAL ENGINEER:	GEOTECHNICAL ENGINEER:
MMPV DESIGN, INC.	**TEICHERT**	**CRAWFORD & ASSOC. INC.**
718 W ARBOR DR	10620 TREENA ST, SUITE 140	1100 CORPORATE WAY STE. 230
SAN DIEGO, CA 92103	SAN DIEGO, CA 92131	SACRAMENTO, CA 95831
619.632.2883	562.283.2970	916.455.4225
AOR: MARIANA MONCADA	ANDREAS KARLSSON	CHRISTOPHER D. TRUMBULL

SCOPE OF WORK

WORK CONSISTS OF INSTALLING 7 PHOTOVOLTAIC (PV) SOLAR POWER ARRAYS OVER AN EXISTING PARKING LOT AND 2 SOLAR POWER SYSTEMS ON AN EXISTING ROOF. SOLAR POWER SYSTEM CONSISTS OF EQUIPMENT, LIGHTING, PV MONITORING AND METERING COMMUNICATIONS AND POWER INTERCONNECT TO THE UTILITY GRID.

TOTAL MODULE COUNT: 1401
KILOWATTS DC: 637.5 kW
TOTAL PARKING ARRAYS: 7
ROOF TOP: 2

NEW PHOTOVOLTAIC ARRAY CODE ANALYSIS

SYSTEM DESCRIPTION: Module Type LONGI LR4-72HPH-455M (2094MM X 1038MM X 35MM) 23.5 kg

Array Name	Array	Total Modules	kW DC	No. of Cols	Minimum Clear Height	Azimuth	Tilt	Occupancy	Const. Type	Area	Allowable Area
A	5 x 33	165	75.08	4	12'-0"	153 °	7 °	S-2 NS	II-B	2,373 SF	-
								TOTAL AREA ARRAY 'A':		**2,373 SF**	**UNLIMITED**
B	5 x 37	185	84.18	4	12'-0"	153 °	7 °	S-2 NS	II-B	2,373 SF	-
								TOTAL AREA ARRAY 'B':		**2,373 SF**	**UNLIMITED**
C	5 x 36	180	81.90	4	12'-0"	153 °	7 °	S-2 NS	II-B	2,373 SF	-
								TOTAL AREA ARRAY 'C':		**2,373 SF**	**UNLIMITED**
D	5 x 35	175	79.63	4	12'-0"	153 °	7 °	S-2 NS	II-B	2,373 SF	-
								TOTAL AREA ARRAY 'D':		**2,373 SF**	**UNLIMITED**
E	5 x 35	175	79.63	4	12'-0"	153 °	7 °	S-2 NS	II-B	2,373 SF	-
								TOTAL AREA ARRAY 'E':		**2,373 SF**	**UNLIMITED**
F	5 x 30	150	68.25	3	12'-0"	153 °	7 °	S-2 NS	II-B	2,373 SF	-
								TOTAL AREA ARRAY 'F':		**2,373 SF**	**UNLIMITED**
G	3 x 30	90	40.95	3	12'-0"	153 °	7 °	S-2 NS	II-B	2,373 SF	-
								TOTAL AREA ARRAY 'G':		**2,373 SF**	**UNLIMITED**
TOTALS:		**1120**	**509.6**	**26**				**TOTAL PARKING PROJECT AREA:**		**16,611 SF**	-
RT 1		152	69.16	-	-	153 °	10 °	-	II-B	3,496 SF	-
RT 2		129	58.70	-	-	153 °	10 °	-	II-B	2,967 SF	-
TOTALS:		**281**	**127.9**	**-**				**TOTAL ROOF TOP PROJECT AREA:**		**6,463 SF**	-
PROJECT TOTALS:		**1401**	**637.5**	**26**				**TOTAL PROJECT AREA:**		**23,074 SF**	-

PER CBC 406.5.5 AREA AND HEIGHT INCREASES: OPEN PARKING GARAGES OF TYPE II CONSTRUCTION, WITH ALL SIDES OPEN, SHALL BE UNLIMITED IN ALLOWABLE AREA WHERE THE BUILDING HEIGHT DOES NOT EXCEED 75'.

SITE INFORMATION:

PROJECT ADDRESS: 222 W 39TH AVENUE
SAN MATEO, CA 94403

APN: 042-130-040

JURISDICTION: SAN MATEO COUNTY

DRAWING INDEX

SHEET #	SHEET TITLE
ARCHITECTURAL DRAWINGS	
MC-A0.0	TITLE SHEET
MC-A1.0	SITE PLAN & FIRE ACCESS PLAN
MC-A1.1	ARRAY LAYOUTS & SECTIONS
MC-A1.2	ENLARGED SITE PLAN
4 SHEETS	
ELECTRICAL DRAWINGS	
E1.0	ELECTRICAL SITE PLAN
E1.1	ENLARGED ELECTRICAL PLANS
E2.0	ELECTRICAL SINGLE LINE DIAGRAM
E2.1	ELECTRICAL SINGLE LINE DIAGRAM
E2.2	ELECTRICAL FEEDER SCHEDULE
E3.0	TYPICAL ELECTRICAL THREE LINE DIAGRAM
E4.0	ELECTRICAL DETAILS
E5.0	TYPICAL ELECTRICAL SOLAR WARNING LABELS
E5.1	TYPICAL ELECTRICAL SOLAR WARNING LABELS
E6.0	ELECTRICAL SOLAR EQUIPMENT CUT SHEETS
E6.1	ELECTRICAL SOLAR EQUIPMENT CUT SHEETS
E6.2	LIGHTING FIXTURE CUT SHEETS
E7.0	OUTDOOR LIGHTING TITLE 24 COMPLIANCE REPORT
E8.0	PV ARRAY ELECTRICAL STRING CABLING PLAN
E8.1	PV ARRAY ELECTRICAL STRING CABLING PLAN
E8.2	PV ARRAY ELECTRICAL STRING CABLING PLAN
E8.3	PV ARRAY ELECTRICAL STRING CABLING PLAN
E8.4	PV ARRAY ELECTRICAL STRING CABLING PLAN
18 SHEETS	
STRUCTURAL DRAWINGS	
S100	GENERAL STRUCTURAL NOTES
S200	FRAMING PLAN & SCHEDULE
S210	FRAMING PLAN & SCHEDULE
S300	SECTION - 5X
S310	SECTION - 3X
S400	FOUNDATION & ANCHORAGE DETAILS
S500	STEEL DETAILS
7 SHEETS	
ROOF STRUCTURAL DRAWINGS	
PC-1	COVER SHEET
PC-2	PROJECT SUMMARY
PC-3	ARRAY SITE MAP
PC-4	TYPICAL ARRAY DIMENSIONS
PC-5	ASSEMLIES
PC-6	RACKING COMPONENTS
PC-7	BALLAST LEGEND
PC-8	BALLAST LAYOUT - 1.1
PC-9	BALLAST LAYOUT - 1.2
PC-10	MECHANICAL ATTACHMENT DETAIL
10 SHEETS	

TOTAL: 39 SHEETS

SYSTEM HOST

800 North Humboldt Street
San Mateo, CA 94401

SYSTEM DEVELOPER

FOREFRONT POWER

100 Montgomery Street, Suite 725
San Francisco, CA 94104

GENERAL CONTRACTOR

COLLINS ELECTRICAL COMPANY INC.

1902 Channel Drive
West Sacramento, CA 95691
916-567-1100

ELECTRICAL ENGINEER

HARDIN-DAVIDSON ENGINEERING

HARDIN-DAVIDSON
356 Pollasky Avenue, Ste. 200
Clovis, CA 93612
559.323.4995

STRUCTURAL ENGINEERING AND STEEL CONSTRUCT

TEICHERT SOLAR

10620 Treena Street, Suite 140,
San Diego, CA 92131

ARCHITECT OF RECORD

M M P V d e s i g n

Mariana Moncada, Architect
718 West Arbor Drive
San Diego, CA 92103
619.632.2883

ARCHITECT / ENGINEER OF RECORD

LICENSED ARCHITECT
MARIANA MONCADA
No. C-37182
REN. 9/30/23
STATE OF CALIFORNIA

PROJECT:

SAN MATEO COUNTY MEDICAL CENTER

222 W 39TH AVENUE
SAN MATEO, CA 94403

NO.	REVISION	DATE

DATE: XX.XX.23

SHEET TITLE:

TITLE SHEET

SHEET NO.:

MC-A0.0

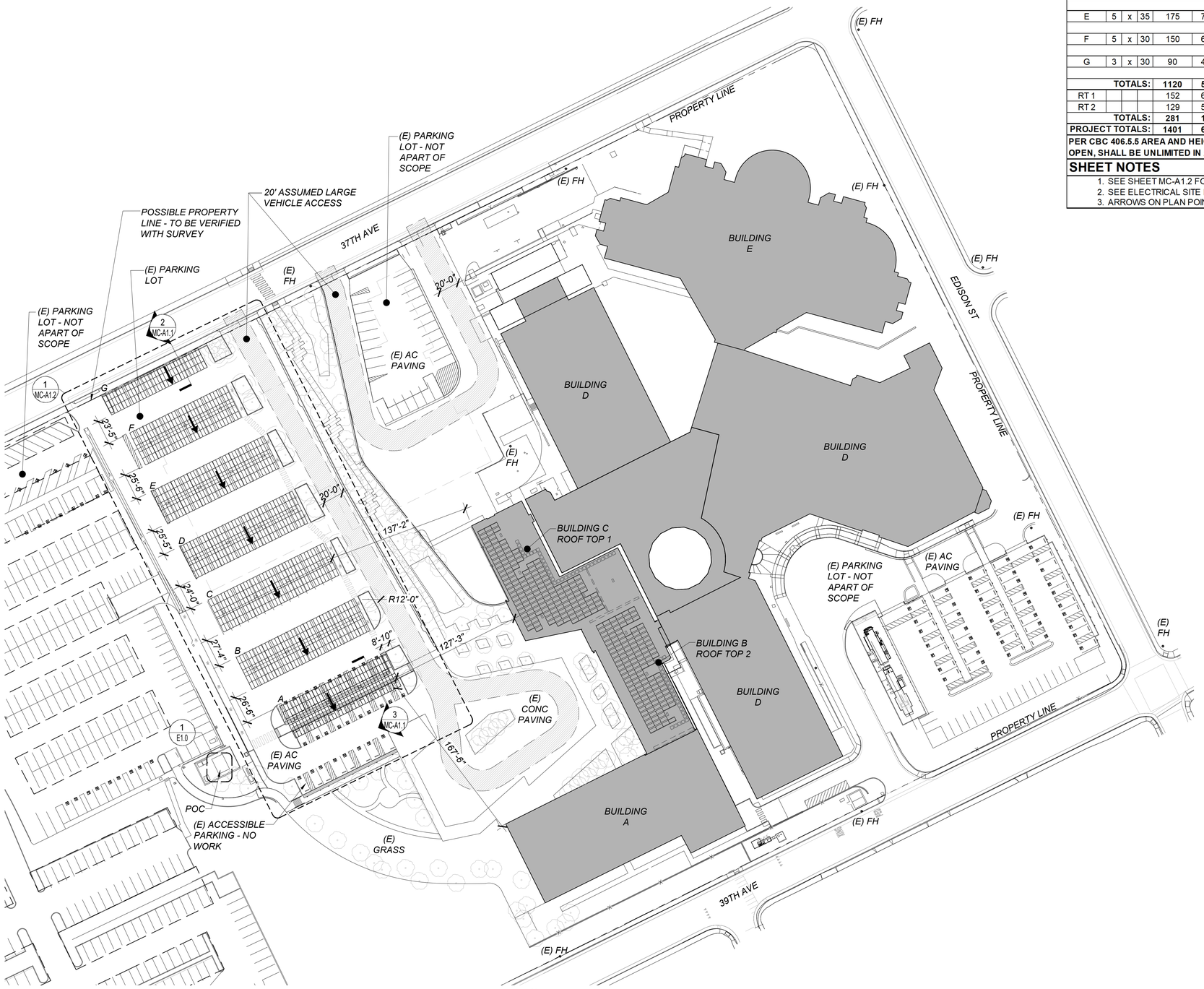

1 SITE PLAN & FIRE ACCESS PLAN
Scale: 1" = 50' (FOR 24X36 SHEETS)

25 50 100

NEW PHOTOVOLTAIC ARRAY CODE ANALYSIS

SYSTEM DESCRIPTION: Module Type LONGI LR4-72HPH-455M (2094MM X 1038MM X 35MM) 23.5 kg

Array Name	Array	Total Modules	kW DC	No. of Cols	Minimum Clear Height	Azimuth	Tilt	Occupancy	Const. Type	Area	Allowable Area
A	5 x 33	165	75.08	4	12'-0"	153 °	7 °	S-2 NS	II-B	2,373 SF	-
									TOTAL AREA ARRAY 'A':	**2,373 SF**	**UNLIMITED**
B	5 x 37	185	84.18	4	12'-0"	153 °	7 °	S-2 NS	II-B	2,373 SF	-
									TOTAL AREA ARRAY 'B':	**2,373 SF**	**UNLIMITED**
C	5 x 36	180	81.90	4	12'-0"	153 °	7 °	S-2 NS	II-B	2,373 SF	-
									TOTAL AREA ARRAY 'C':	**2,373 SF**	**UNLIMITED**
D	5 x 35	175	79.63	4	12'-0"	153 °	7 °	S-2 NS	II-B	2,373 SF	-
									TOTAL AREA ARRAY 'D':	**2,373 SF**	**UNLIMITED**
E	5 x 35	175	79.63	4	12'-0"	153 °	7 °	S-2 NS	II-B	2,373 SF	-
									TOTAL AREA ARRAY 'E':	**2,373 SF**	**UNLIMITED**
F	5 x 30	150	68.25	3	12'-0"	153 °	7 °	S-2 NS	II-B	2,373 SF	-
									TOTAL AREA ARRAY 'F':	**2,373 SF**	**UNLIMITED**
G	3 x 30	90	40.95	3	12'-0"	153 °	7 °	S-2 NS	II-B	2,373 SF	-
									TOTAL AREA ARRAY 'G':	**2,373 SF**	**UNLIMITED**
TOTALS:		**1120**	**509.6**	**26**					**TOTAL PARKING PROJECT AREA:**	**16,611 SF**	-
RT 1		152	69.16	-	-	153 °	10 °	-	II-B	3,496 SF	-
RT 2		129	58.70	-	-	153 °	10 °	-	II-B	2,967 SF	-
TOTALS:		**281**	**127.9**	**-**					**TOTAL ROOF TOP PROJECT AREA:**	**6,463 SF**	-
PROJECT TOTALS:		**1401**	**637.5**	**26**					**TOTAL PROJECT AREA:**	**23,074 SF**	-

PER CBC 406.5.5 AREA AND HEIGHT INCREASES: OPEN PARKING GARAGES OF TYPE II CONSTRUCTION, WITH ALL SIDES OPEN, SHALL BE UNLIMITED IN ALLOWABLE AREA WHERE THE BUILDING HEIGHT DOES NOT EXCEED 75'.

SHEET NOTES

1. SEE SHEET MC-A1.2 FOR ENLARGED SITE PLAN
2. SEE ELECTRICAL SITE PLAN FOR POC INFORMATION AND LOCATION
3. ARROWS ON PLAN POINT TO LOW SIDE OF CANOPY

SYSTEM HOST

800 North Humboldt Street
San Mateo, CA 94401

SYSTEM DEVELOPER

FOREFRONT POWER
100 Montgomery Street, Suite 725
San Francisco, CA 94104

GENERAL CONTRACTOR

COLLINS ELECTRICAL COMPANY INC.
1902 Channel Drive
West Sacramento, CA 95691
916-567-1100

ELECTRICAL ENGINEER

HARDIN-DAVIDSON ENGINEERING
HARDIN-DAVIDSON
356 Pollasky Avenue, Ste. 200
Clovis, CA 93612
559.323.4995

STRUCTURAL ENGINEERING AND STEEL CONSTRUCT

TEICHERT SOLAR
10620 Treena Street, Suite 140,
San Diego, CA 92131

ARCHITECT OF RECORD

M M P V d e s i g n

Mariana Moncada, Architect
718 West Arbor Drive
San Diego, CA 92103
619.632.2883

ARCHITECT / ENGINEER OF RECORD

LICENSED ARCHITECT
MARIANA MONCADA
NO. C37182
REN. 9/30/23
STATE OF CALIFORNIA

PROJECT:

SAN MATEO COUNTY MEDICAL CENTER

222 W 39TH AVENUE
SAN MATEO, CA 94403

NO.	REVISION	DATE

DATE: XX.XX.23

SHEET TITLE:

SITE PLAN & FIRE ACCESS PLAN

SHEET NO.:

MC-A1.0

NEW PHOTOVOLTAIC ARRAY CODE ANALYSIS

SYSTEM DESCRIPTION: Module Type LONGI LR4-72HPH-455M (2094MM X 1038MM X 35MM) 23.5 kg

Array Name	Array	Total Modules	kW DC	No. of Cols	Minimum Clear Height	Azimuth	Tilt	Occupancy	Const. Type	Area	Allowable Area
A	5 x 33	165	75.08	4	12'-0"	153 °	7 °	S-2 NS	II-B	2,373 SF	-
									TOTAL AREA ARRAY 'A':	2,373 SF	UNLIMITED
B	5 x 37	185	84.18	4	12'-0"	153 °	7 °	S-2 NS	II-B	2,373 SF	-
									TOTAL AREA ARRAY 'B':	2,373 SF	UNLIMITED
C	5 x 36	180	81.90	4	12'-0"	153 °	7 °	S-2 NS	II-B	2,373 SF	-
									TOTAL AREA ARRAY 'C':	2,373 SF	UNLIMITED
D	5 x 35	175	79.63	4	12'-0"	153 °	7 °	S-2 NS	II-B	2,373 SF	-
									TOTAL AREA ARRAY 'D':	2,373 SF	UNLIMITED
E	5 x 35	175	79.63	4	12'-0"	153 °	7 °	S-2 NS	II-B	2,373 SF	-
									TOTAL AREA ARRAY 'E':	2,373 SF	UNLIMITED
F	5 x 30	150	68.25	3	12'-0"	153 °	7 °	S-2 NS	II-B	2,373 SF	-
									TOTAL AREA ARRAY 'F':	2,373 SF	UNLIMITED
G	3 x 30	90	40.95	3	12'-0"	153 °	7 °	S-2 NS	II-B	2,373 SF	-
									TOTAL AREA ARRAY 'G':	2,373 SF	UNLIMITED
	TOTALS:	1120	509.6	26					TOTAL PARKING PROJECT AREA:	16,611 SF	-
RT 1		152	69.16	-	-	153 °	10 °	-	II-B	3,496 SF	-
RT 2		129	58.70	-	-	153 °	10 °	-	II-B	2,967 SF	-
	TOTALS:	281	127.9	-					TOTAL ROOF TOP PROJECT AREA:	6,463 SF	-
PROJECT TOTALS:		1401	637.5	26					TOTAL PROJECT AREA:	23,074 SF	-

PER CBC 406.5.5 AREA AND HEIGHT INCREASES: OPEN PARKING GARAGES OF TYPE II CONSTRUCTION, WITH ALL SIDES OPEN, SHALL BE UNLIMITED IN ALLOWABLE AREA WHERE THE BUILDING HEIGHT DOES NOT EXCEED 75'.

SHEET NOTES

1. SEE SHEET MC-A1.2 FOR ENLARGED SITE PLAN
2. SEE ELECTRICAL SITE PLAN FOR POC INFORMATION AND LOCATION
3. ARROWS ON PLAN POINT TO LOW SIDE OF CANOPY

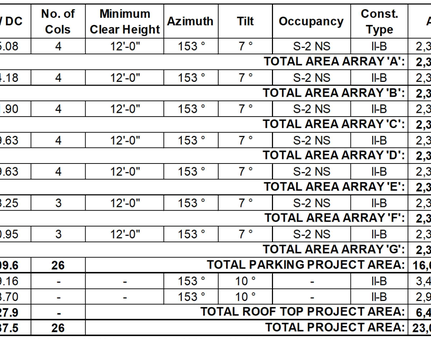

3 ARRAY SECTION
Scale: 1/8"=1'-0"

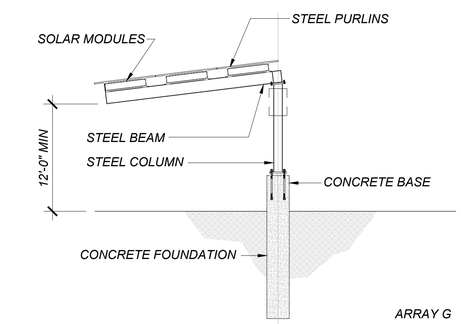

2 ARRAY SECTION
Scale: 1/8"=1'-0"

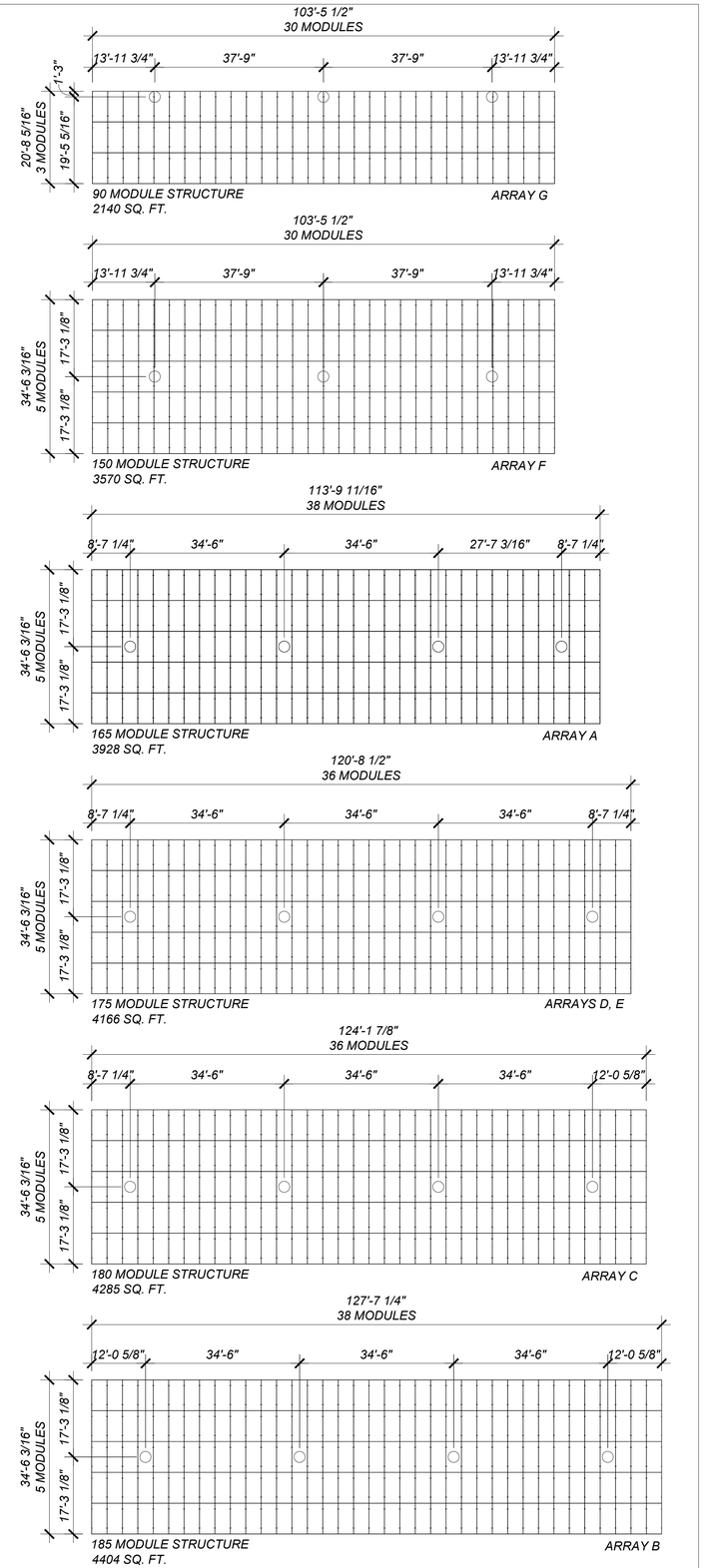

1 ARRAY LAYOUTS
Scale: 1/16"=1'-0"

SYSTEM HOST

COUNTY OF SAN MATEO CALIFORNIA

800 North Humboldt Street
San Mateo, CA 94401

SYSTEM DEVELOPER

FOREFRONT POWER

100 Montgomery Street, Suite 725
San Francisco, CA 94104

GENERAL CONTRACTOR

COLLINS ELECTRICAL COMPANY INC.

1902 Channel Drive
West Sacramento, CA 95691
916-567-1100

ELECTRICAL ENGINEER

HARDIN-DAVIDSON ENGINEERING

HARDIN-DAVIDSON
356 Pollasky Avenue, Ste. 200
Clovis, CA 93612
559.323.4995

STRUCTURAL ENGINEERING AND STEEL CONSTRUCT

TEICHERT SOLAR

10620 Treena Street, Suite 140,
San Diego, CA 92131

ARCHITECT OF RECORD

M M P V d e s i g n

Mariana Moncada, Architect
718 West Arbor Drive
San Diego, CA 92103
619.632.2883

ARCHITECT / ENGINEER OF RECORD

LICENSED ARCHITECT
MARIANA MONCADA
NO. C37182
REN. 9/30/23
STATE OF CALIFORNIA

PROJECT:

SAN MATEO COUNTY MEDICAL CENTER

222 W 39TH AVENUE
SAN MATEO, CA 94403

NO.	REVISION	DATE

DATE: XX.XX.23

SHEET TITLE:

ARRAY LAYOUTS & SECTIONS

SHEET NO.:

MC-A1.1

NEW PHOTOVOLTAIC ARRAY CODE ANALYSIS

SYSTEM DESCRIPTION: Module Type LONGI LR4-72HPH-455M (2094MM X 1038MM X 35MM) 23.5 kg

Array Name	Array	Total Modules	kW DC	No. of Cols	Minimum Clear Height	Azimuth	Tilt	Occupancy	Const. Type	Area	Allowable Area
A	5 x 33	165	75.08	4	12'-0"	153 °	7 °	S-2 NS	II-B	2,373 SF	-
									TOTAL AREA ARRAY 'A':	**2,373 SF**	**UNLIMITED**
B	5 x 37	185	84.18	4	12'-0"	153 °	7 °	S-2 NS	II-B	2,373 SF	-
									TOTAL AREA ARRAY 'B':	**2,373 SF**	**UNLIMITED**
C	5 x 36	180	81.90	4	12'-0"	153 °	7 °	S-2 NS	II-B	2,373 SF	-
									TOTAL AREA ARRAY 'C':	**2,373 SF**	**UNLIMITED**
D	5 x 35	175	79.63	4	12'-0"	153 °	7 °	S-2 NS	II-B	2,373 SF	-
									TOTAL AREA ARRAY 'D':	**2,373 SF**	**UNLIMITED**
E	5 x 35	175	79.63	4	12'-0"	153 °	7 °	S-2 NS	II-B	2,373 SF	-
									TOTAL AREA ARRAY 'E':	**2,373 SF**	**UNLIMITED**
F	5 x 30	150	68.25	3	12'-0"	153 °	7 °	S-2 NS	II-B	2,373 SF	-
									TOTAL AREA ARRAY 'F':	**2,373 SF**	**UNLIMITED**
G	3 x 30	90	40.95	3	12'-0"	153 °	7 °	S-2 NS	II-B	2,373 SF	-
									TOTAL AREA ARRAY 'G':	**2,373 SF**	**UNLIMITED**
TOTALS:		**1120**	**509.6**	**26**					**TOTAL PARKING PROJECT AREA:**	**16,611 SF**	-
RT 1		152	69.16	-	-	153 °	10 °	-	II-B	3,496 SF	-
RT 2		129	58.70	-	-	153 °	10 °	-	II-B	2,967 SF	-
TOTALS:		**281**	**127.9**	**-**					**TOTAL ROOF TOP PROJECT AREA:**	**6,463 SF**	-
PROJECT TOTALS:		**1401**	**637.5**	**26**					**TOTAL PROJECT AREA:**	**23,074 SF**	-

PER CBC 406.5.5 AREA AND HEIGHT INCREASES: OPEN PARKING GARAGES OF TYPE II CONSTRUCTION, WITH ALL SIDES OPEN, SHALL BE UNLIMITED IN ALLOWABLE AREA WHERE THE BUILDING HEIGHT DOES NOT EXCEED 75'.

SHEET NOTES

1. SEE SHEET MC-A1.2 FOR ENLARGED SITE PLAN
2. SEE ELECTRICAL SITE PLAN FOR POC INFORMATION AND LOCATION
3. ARROWS ON PLAN POINT TO LOW SIDE OF CANOPY

PARKING ANALYSIS

LOT	TOTAL STD STALLS	REQ'D ACCESSIBLE STALLS	PROVIDED ACCESSIBLE STALLS	COVERED STANDARD STALLS	RATIO: COVERED TO UNCOVERED	REQ'D COVERED ACCESSIBLE STALLS	PROVIDED COVERED ACCESSIBLE STALLS
1	144	5	26	143	99%	5	7

KEYNOTES - EXISTING ADA - NO WORK

1	(E) ACCESSIBLE PARKING SIGN
2	(E) WHEELSTOP
3	(E) TYPICAL ACCESSIBLE PARKING STRIPING AND ISA
4	(E) TYPICAL ACCESS AISLE STRIPING
5	(E) TRUNCATED DOMES
6	(N) STEEL COLUMN FOR SOLAR

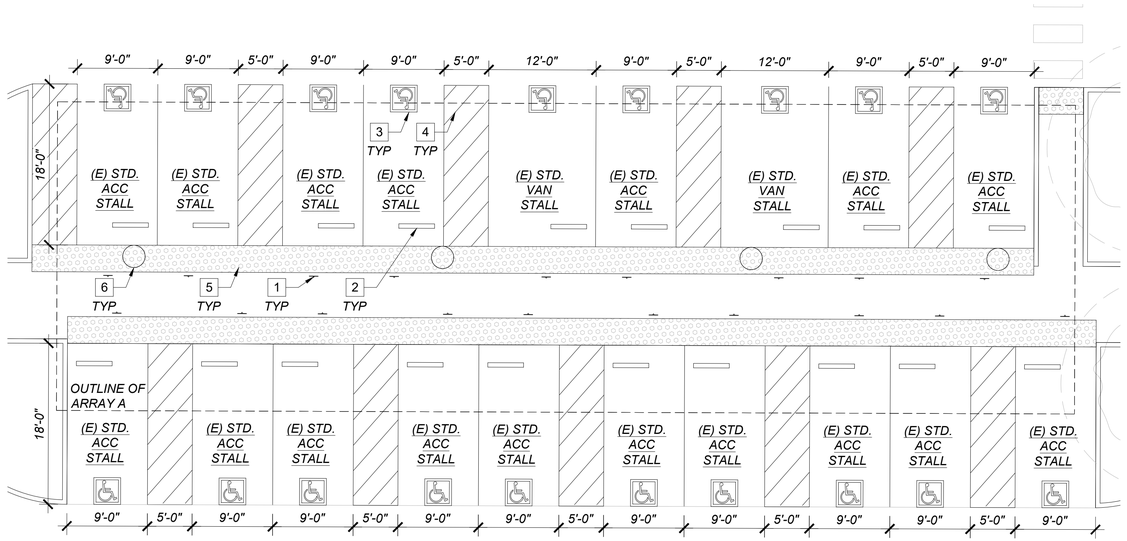

2 ARRAY LAYOUT
Scale: 1/16" = 1'-0" (FOR 24X36 SHEETS)
8 16 32

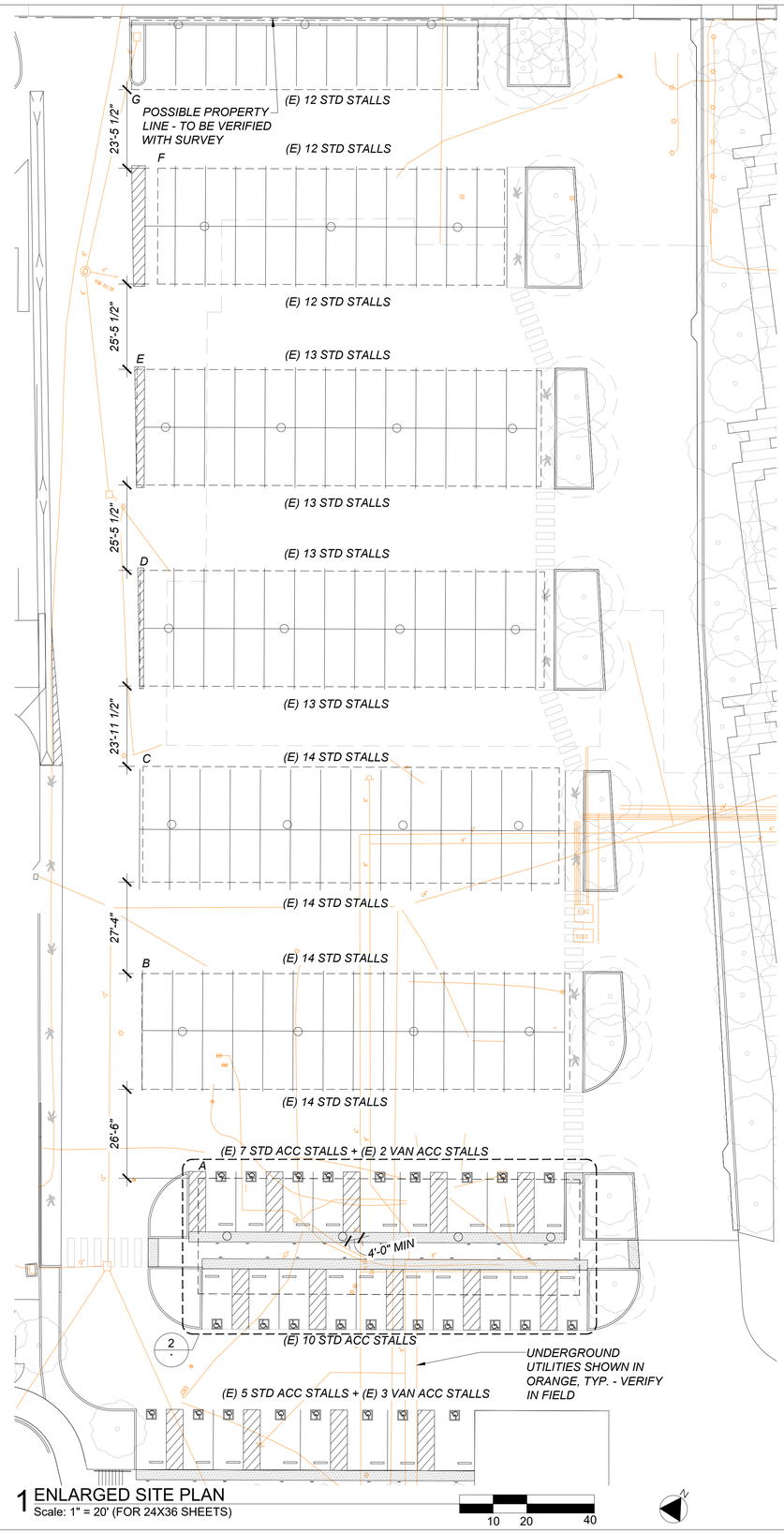

1 ENLARGED SITE PLAN
Scale: 1" = 20' (FOR 24X36 SHEETS)
10 20 40

SYSTEM HOST

COUNTY OF SAN MATEO HEALTH

800 North Humboldt Street
San Mateo, CA 94401

SYSTEM DEVELOPER

FOREFRONT POWER

100 Montgomery Street, Suite 725
San Francisco, CA 94104

GENERAL CONTRACTOR

COLLINS ELECTRICAL COMPANY INC.

1902 Channel Drive
West Sacramento, CA 95691
916-567-1100

ELECTRICAL ENGINEER

HARDIN-DAVIDSON ENGINEERING

HARDIN-DAVIDSON
356 Pollasky Avenue, Ste. 200
Clovis, CA 93612
559.323.4995

STRUCTURAL ENGINEERING AND STEEL CONSTRUCT

TEICHERT SOLAR

10620 Treena Street, Suite 140,
San Diego, CA 92131

ARCHITECT OF RECORD

M M P V d e s i g n

Mariana Moncada, Architect
718 West Arbor Drive
San Diego, CA 92103
619.632.2883

ARCHITECT / ENGINEER OF RECORD

LICENSED ARCHITECT
MARIANA MONCADA
NO. C-37182
REN. 9/30/23
STATE OF CALIFORNIA

PROJECT:

SAN MATEO COUNTY MEDICAL CENTER

222 W 39TH AVENUE
SAN MATEO, CA 94403

NO.	REVISION	DATE

DATE: XX.XX.23

SHEET TITLE:

ENLARGED SITE PLAN

SHEET NO.:

MC-A1.2

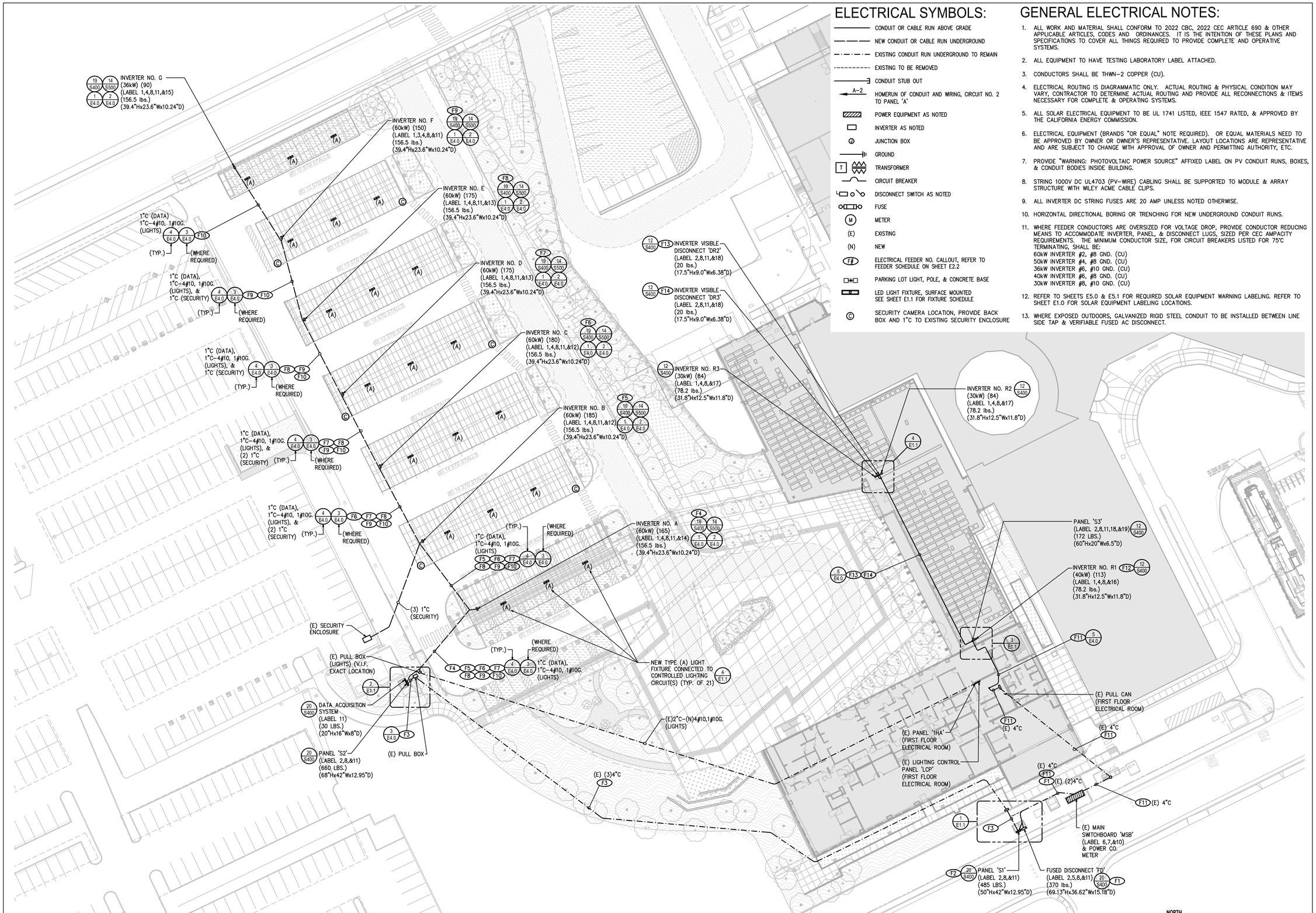

ELECTRICAL SYMBOLS:

- CONDUIT OR CABLE RUN ABOVE GRADE
- NEW CONDUIT OR CABLE RUN UNDERGROUND
- EXISTING CONDUIT RUN UNDERGROUND TO REMAIN
- EXISTING TO BE REMOVED
- CONDUIT STUB OUT
- A-2 — HOMERUN OF CONDUIT AND WIRING, CIRCUIT NO. 2 TO PANEL 'A'
- POWER EQUIPMENT AS NOTED
- INVERTER AS NOTED
- J — JUNCTION BOX
- GROUND
- T — TRANSFORMER
- CIRCUIT BREAKER
- DISCONNECT SWITCH AS NOTED
- FUSE
- M — METER
- (E) — EXISTING
- (N) — NEW
- F# — ELECTRICAL FEEDER NO. CALLOUT, REFER TO FEEDER SCHEDULE ON SHEET E2.2
- PARKING LOT LIGHT, POLE, & CONCRETE BASE
- LED LIGHT FIXTURE, SURFACE MOUNTED SEE SHEET E1.1 FOR FIXTURE SCHEDULE
- C — SECURITY CAMERA LOCATION, PROVIDE BACK BOX AND 1"C TO EXISTING SECURITY ENCLOSURE

GENERAL ELECTRICAL NOTES:

1. ALL WORK AND MATERIAL SHALL CONFORM TO 2022 CBC, 2022 CEC ARTICLE 690 & OTHER APPLICABLE ARTICLES, CODES AND ORDINANCES. IT IS THE INTENTION OF THESE PLANS AND SPECIFICATIONS TO COVER ALL THINGS REQUIRED TO PROVIDE COMPLETE AND OPERATIVE SYSTEMS.
2. ALL EQUIPMENT TO HAVE TESTING LABORATORY LABEL ATTACHED.
3. CONDUCTORS SHALL BE THWN-2 COPPER (CU).
4. ELECTRICAL ROUTING IS DIAGRAMMATIC ONLY. ACTUAL ROUTING & PHYSICAL CONDITION MAY VARY, CONTRACTOR TO DETERMINE ACTUAL ROUTING AND PROVIDE ALL RECONNECTIONS & ITEMS NECESSARY FOR COMPLETE & OPERATING SYSTEMS.
5. ALL SOLAR ELECTRICAL EQUIPMENT TO BE UL 1741 LISTED, IEEE 1547 RATED, & APPROVED BY THE CALIFORNIA ENERGY COMMISSION.
6. ELECTRICAL EQUIPMENT (BRANDS "OR EQUAL" NOTE REQUIRED). OR EQUAL MATERIALS NEED TO BE APPROVED BY OWNER OR OWNER'S REPRESENTATIVE. LAYOUT LOCATIONS ARE REPRESENTATIVE AND ARE SUBJECT TO CHANGE WITH APPROVAL OF OWNER AND PERMITTING AUTHORITY, ETC.
7. PROVIDE "WARNING: PHOTOVOLTAIC POWER SOURCE" AFFIXED LABEL ON PV CONDUIT RUNS, BOXES, & CONDUIT BODIES INSIDE BUILDING.
8. STRING 1000V DC UL4703 (PV-WIRE) CABLING SHALL BE SUPPORTED TO MODULE & ARRAY STRUCTURE WITH WILEY ACME CABLE CLIPS.
9. ALL INVERTER DC STRING FUSES ARE 20 AMP UNLESS NOTED OTHERWISE.
10. HORIZONTAL DIRECTIONAL BORING OR TRENCHING FOR NEW UNDERGROUND CONDUIT RUNS.
11. WHERE FEEDER CONDUCTORS ARE OVERSIZED FOR VOLTAGE DROP, PROVIDE CONDUCTOR REDUCING MEANS TO ACCOMMODATE INVERTER, PANEL, & DISCONNECT LUGS, SIZED PER CEC AMPACITY REQUIREMENTS. THE MINIMUM CONDUCTOR SIZE, FOR CIRCUIT BREAKERS LISTED FOR 75°C TERMINATING, SHALL BE:
    60kW INVERTER #2, #8 GND. (CU)
    50kW INVERTER #4, #8 GND. (CU)
    36kW INVERTER #6, #10 GND. (CU)
    40kW INVERTER #6, #8 GND. (CU)
    30kW INVERTER #8, #10 GND. (CU)
12. REFER TO SHEETS E5.0 & E5.1 FOR REQUIRED SOLAR EQUIPMENT WARNING LABELING. REFER TO SHEET E1.0 FOR SOLAR EQUIPMENT LABELING LOCATIONS.
13. WHERE EXPOSED OUTDOORS, GALVANIZED RIGID STEEL CONDUIT TO BE INSTALLED BETWEEN LINE SIDE TAP & VERIFIABLE FUSED AC DISCONNECT.

ELECTRICAL SITE PLAN

SCALE: 1" = 30'-0"

NORTH

0 15' 30' 60'

SYSTEM HOST

800 North Humboldt Street
San Mateo, CA 94401

SYSTEM DEVELOPER

FOREFRONT POWER
100 Montgomery Street, Suite 725
San Francisco, CA 94104

GENERAL CONTRACTOR

COLLINS ELECTRICAL COMPANY INC.
1902 Channel Drive
West Sacramento, CA 95691
916-567-1100

ELECTRICAL ENGINEER

HARDIN-DAVIDSON ENGINEERING
HARDIN-DAVIDSON
356 Pollasky Avenue, Ste. 200
Clovis, CA 93612
559.323.4995

STRUCTURAL ENGINEERING AND STEEL CONSTRUCT

TEICHERT SOLAR
10620 Treena Street, Suite 140,
San Diego, CA 92131

ARCHITECT OF RECORD

M M P V d e s i g n
Mariana Moncada, Architect
716 West Arbor Drive
San Diego, CA 92103
619.632.2883

ARCHITECT / ENGINEER OF RECORD

REGISTERED PROFESSIONAL ENGINEER
R.J.HARDIN
NO. 9125
ELECTRICAL
STATE OF CALIFORNIA

PROJECT:

SAN MATEO COUNTY MEDICAL CENTER

222 W 39TH AVENUE
SAN MATEO, CA 94403

NO.	REVISION	DATE

DATE: 07.21.23

SHEET TITLE:

ELECTRICAL SITE PLAN

SHEET NO.:

E1.0

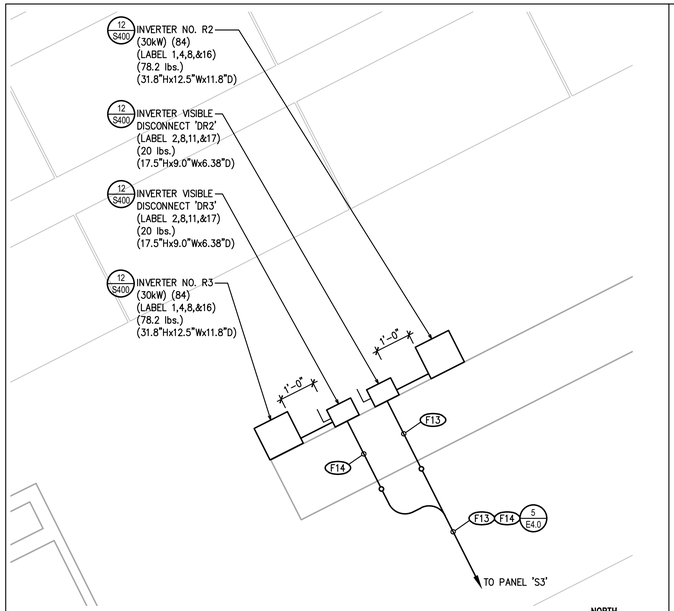

ROOFTOP ENLARGED ELECTRICAL PLAN 4

SCALE: 1/2" = 1'-0"

NORTH

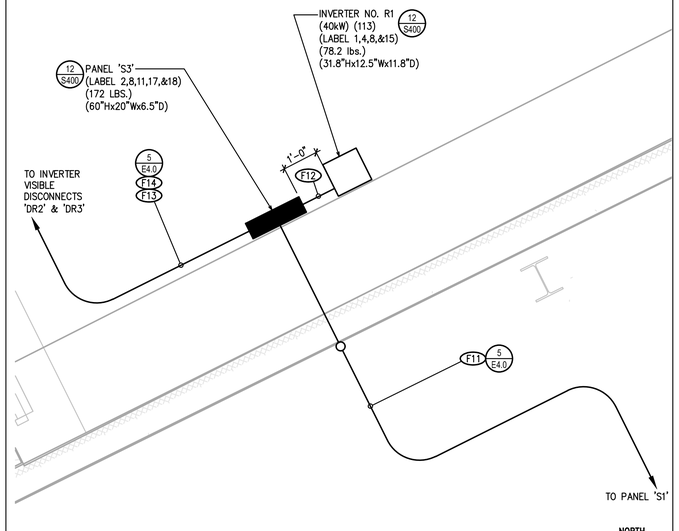

PANEL 'S3' ENLARGED ELECTRICAL PLAN 3

SCALE: 1/2" = 1'-0"

NORTH

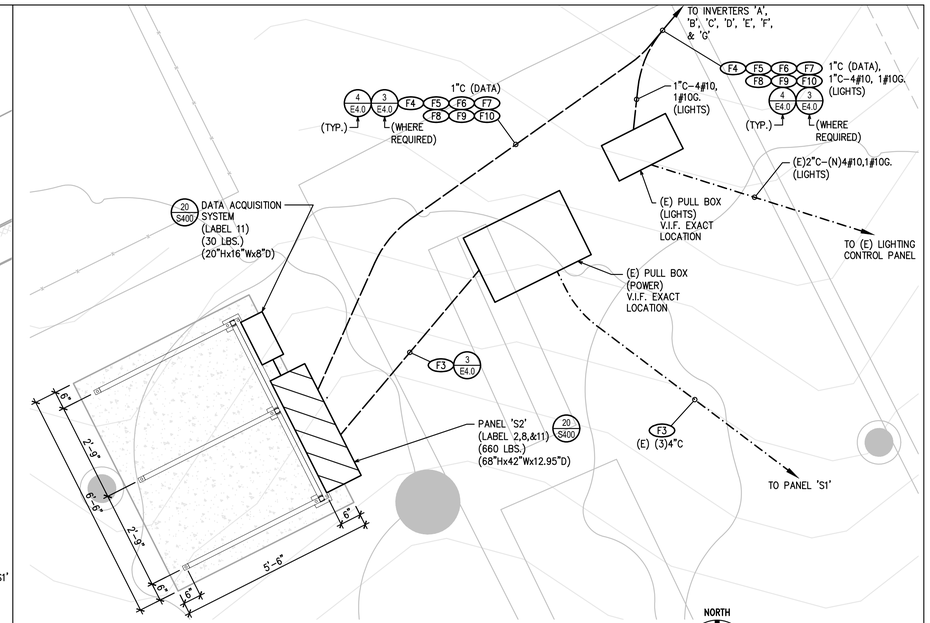

PANEL 'S2' ENLARGED ELECTRICAL PLAN 2

SCALE: 1/2" = 1'-0"

NORTH

0 1' 2' 4'

LIGHTING FIXTURE SCHEDULE

TYPE	MANUFACTURER	MODEL NO.	SOURCE	WATTS	VOLT	MOUNTING
A	ILP	WTZ4-4L-U-50-RAFL-CORDW/6FT-BD50 (OR EQUAL)	LED	29	120-277	SURFACE, CARPORT STEEL

NOTE:
PROVIDE (21) NEW TYPE (A) LIGHT FIXTURES & CONNECT TO CONTROLLED EXTERIOR LIGHTING CIRCUIT(S). VERIFY VOLTAGE, FOR 480V OPERATION ORDER WITH SD480 OPTION.

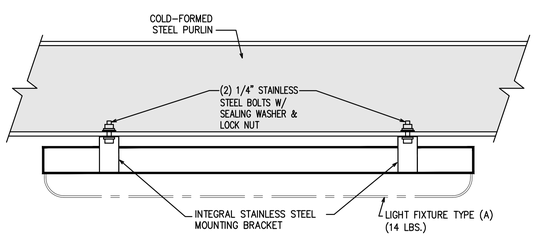

NOTE: LIGHT FIXTURE GROUNDED AT FACTORY GROUND TERMINAL WITH BRANCH CIRCUIT GROUNDING CONDUCTOR.

LIGHT FIXTURE MOUNTING DETAIL 4

SCALE: NONE

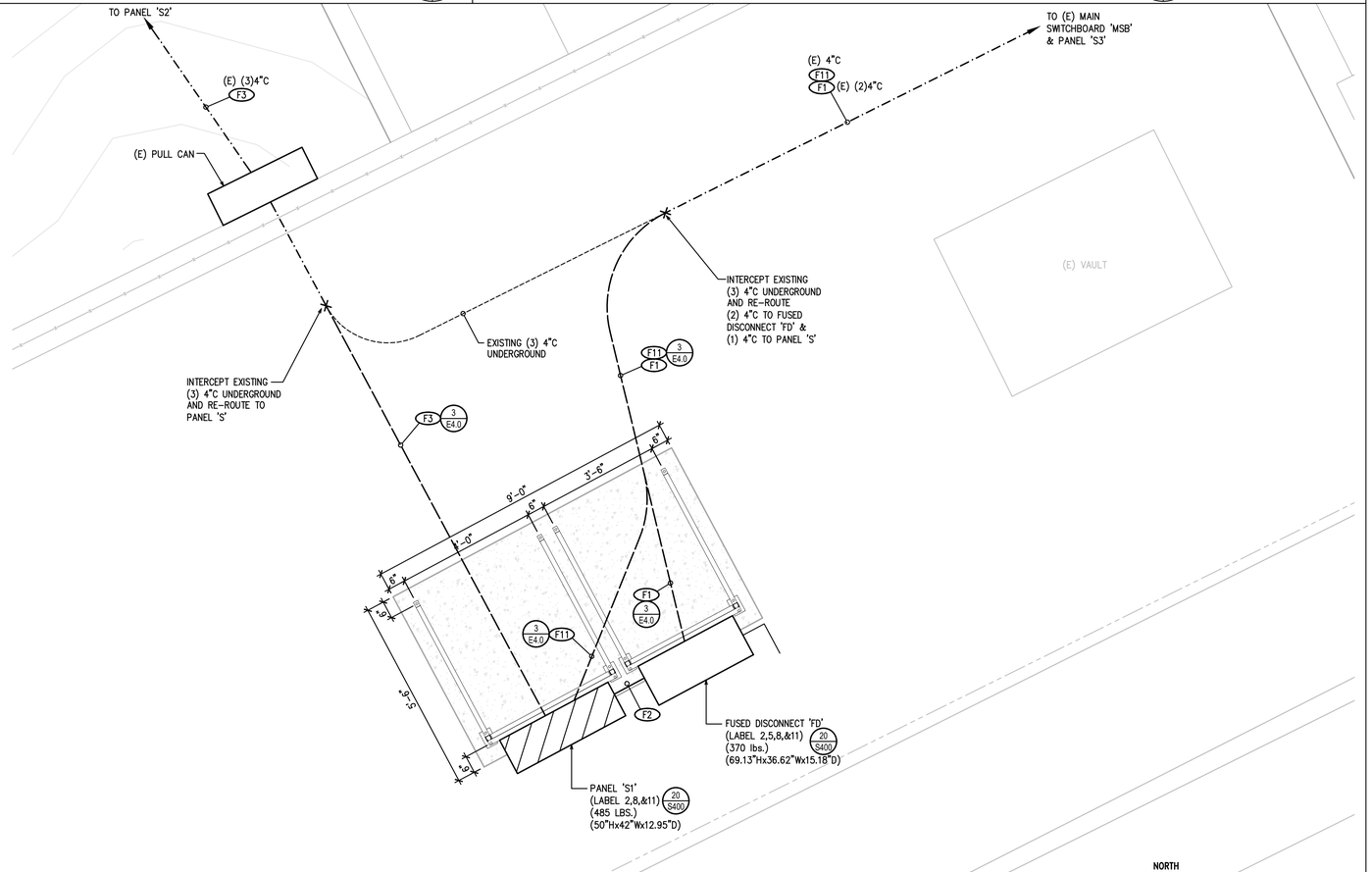

PANEL 'S1' & FUSED DISCONNECT 'FD' ENLARGED ELECTRICAL PLAN 1

SCALE: 1/2" = 1'-0"

NORTH

0 1' 2' 4'

SYSTEM HOST

800 North Humboldt Street
San Mateo, CA 94401

SYSTEM DEVELOPER

FOREFRONT POWER

100 Montgomery Street, Suite 725
San Francisco, CA 94104

GENERAL CONTRACTOR

COLLINS ELECTRICAL COMPANY INC.

1902 Channel Drive
West Sacramento, CA 95691
916-567-1100

ELECTRICAL ENGINEER

HARDIN-DAVIDSON ENGINEERING

HARDIN-DAVIDSON
356 Pollasky Avenue, Ste. 200
Clovis, CA 93612
559.323.4995

STRUCTURAL ENGINEERING AND STEEL CONSTRUCT

TEICHERT SOLAR

10620 Treena Street, Suite 140,
San Diego, CA 92131

ARCHITECT OF RECORD

M M P V d e s i g n

Mariana Moncada, Architect
718 West Arbor Drive
San Diego, CA 92103
619.632.2883

ARCHITECT / ENGINEER OF RECORD

REGISTERED PROFESSIONAL ENGINEER R.J.HARDIN NO. 9125 ELECTRICAL STATE OF CALIFORNIA

PROJECT:

SAN MATEO COUNTY MEDICAL CENTER

222 W 39TH AVENUE
SAN MATEO, CA 94403

NO.	REVISION	DATE

DATE: 07.21.23

SHEET TITLE:

ENLARGED ELECTRICAL PLANS

SHEET NO.:

E1.1

DC STRING OCPD CALCULATION
PV MODULE OUTPUT:
Isc: 11.66 x 1.56 = 18.19A
20A FUSE ALLOWABLE (PER CEC 690.9(B))

DC STRING WIRE SIZE CALCULATION
CANOPY PV MODULE OUTPUT:
CEC 690.8(B)(1)
#10 AWG = 40A (90°C)(PER TABLE CEC 310.15(B)(16))

Isc: 11.66 x 1.56 = 18.19A
40.0A > 18.19A
#10 AWG CONDUCTOR IS ALLOWABLE PER CEC
110.14(C)(1)(a)(3)

CEC 690.8(B)(2)
#10 AWG = 40A (90°C)(PER TABLE CEC 310.15(B)(16))

88°F AMBIENT TEMP. = 0.96 DE-RATING

21-30 CURRENT CARRYING CONDUCTORS
IN A RACEWAY (SHARED CONDUIT)
(PER TABLE CEC 310.15(B)(3)(a) = 0.45 DE-RATING

Isc: (11.66A x 1.25) / (0.96 x 0.45) = 33.74A
40A > 33.74A
#10 AWG CONDUCTOR IS ALLOWABLE PER CEC
110.14(C)(1)(a)(3)

ROOF PV MODULE TO OPTIMIZER:
CEC 690.8(B)(1)
#12 AWG = 30A (90°C)(PER TABLE CEC 310.15(B)(16))

Isc: 11.66 x 1.56 = 18.19A
30.0A > 18.19A
#12 AWG CONDUCTOR IS ALLOWABLE PER CEC
110.14(C)(1)(a)(3)

CEC 690.8(B)(2)
#12 AWG = 30A (90°C)(PER TABLE CEC 310.15(B)(16))

115°F AMBIENT TEMP. = 0.82 DE-RATING

Isc: (11.66A x 1.25) / (0.82) = 17.77A
30A > 17.77A
#12 AWG CONDUCTOR IS ALLOWABLE PER CEC
110.14(C)(1)(a)(3)

OPTIMIZER TO OPTIMIZER:
CEC 690.8(B)(1)
#10 AWG = 40A (90°C)(PER TABLE CEC 310.15(B)(16))

Isc: 18.00 x 1.56 = 28.08A
40.0A > 28.08A
#10 AWG CONDUCTOR IS ALLOWABLE PER CEC
110.14(C)(1)(a)(3)

CEC 690.8(B)(2)
#10 AWG = 40A (90°C)(PER TABLE CEC 310.15(B)(16))

115°F AMBIENT TEMP. = 0.82 DE-RATING

Isc: (18.00A x 1.25) / (0.82) = 27.44A
40A > 27.44A
#10 AWG CONDUCTOR IS ALLOWABLE PER CEC
110.14(C)(1)(a)(3)

OPTIMIZER TO INVERTER HOME RUN:
CEC 690.8(B)(1)
#8 AWG = 55A (90°C)(PER TABLE CEC 310.15(B)(16))

Isc: 18.00 x 1.56 = 28.08A
55.0A > 28.08A
#8 AWG CONDUCTOR IS ALLOWABLE PER CEC
110.14(C)(1)(a)(3)

CEC 690.8(B)(2)
#8 AWG = 55A (90°C)(PER TABLE CEC 310.15(B)(16))

115°F AMBIENT TEMP. = 0.82 DE-RATING

7-9 CURRENT CARRYING CONDUCTORS
IN A RACEWAY (SHARED CONDUIT)
(PER TABLE CEC 310.15(B)(3)(a) = 0.70 DE-RATING

Isc: (18.00A x 1.25) / (0.82 x 0.70) = 39.20A
55A > 39.20A
#8 AWG CONDUCTOR IS ALLOWABLE PER CEC
110.14(C)(1)(a)(3)

60 KW INVERTER AC Wire & OCPD CALCULATION:
INVERTER:
AC Output Power: 72.2A AC Output Current Max
72.2A x 1.25 = 90.25A
100 AMP OCPD PER 60kW INVERTER OUTPUT

#2 AWG THWN-2 = 115A (75°C)
(PER TABLE CEC 310.16) (CU)

TEMP. CONDITIONS: OUTDOOR WIRE RUN -
AMBIENT TEMP. = 38°C
(3) CURRENT CARRYING CONDUCTORS
IN A RACEWAY (SHARED CONDUIT)
(PER TABLE CEC 310.15(B)(3)(a) = 1.0

115A x 1.0 = 115A = 115A TEMP. ADJUSTED
#2 CURRENT = 115A @ 75°C PER CEC 110.14(C)
#2 AWG CONDUCTOR IS MINIMUM ALLOWABLE (CU)

36 KW INVERTER AC Wire & OCPD CALCULATION:
INVERTER:
AC Output Power: 43.5A AC Output Current Max
43.5A x 1.25 = 54.38A
60 AMP OCPD PER 36kW INVERTER OUTPUT

#6 AWG THWN-2 = 65A (75°C)
(PER TABLE CEC 310.16) (CU)

TEMP. CONDITIONS: OUTDOOR WIRE RUN -
AMBIENT TEMP. = 38°C
(3) CURRENT CARRYING CONDUCTORS
IN A RACEWAY (SHARED CONDUIT)
(PER TABLE CEC 310.15(B)(3)(a) = 1.0

65A x 1.0 = 65A = 65A TEMP. ADJUSTED
#6 CURRENT = 65A @ 75°C PER CEC 110.14(C)
#6 AWG CONDUCTOR IS MINIMUM ALLOWABLE (CU)

40 KW INVERTER AC Wire & OCPD CALCULATION:
INVERTER:
AC Output Power: 48.25A AC Output Current Max
48.25A x 1.25 = 60.31A
70 AMP OCPD PER 40kW INVERTER OUTPUT

#6 AWG THWN-2 = 65A (75°C)
(PER TABLE CEC 310.16) (CU)

TEMP. CONDITIONS: OUTDOOR WIRE RUN -
AMBIENT TEMP. = 38°C
(3) CURRENT CARRYING CONDUCTORS
IN A RACEWAY (SHARED CONDUIT)
(PER TABLE CEC 310.15(B)(3)(a) = 1.0

65A x 1.0 = 65A = 65A TEMP. ADJUSTED
#6 CURRENT = 65A @ 75°C PER CEC 110.14(C)
#6 AWG CONDUCTOR IS MINIMUM ALLOWABLE (CU)

30 KW INVERTER AC Wire & OCPD CALCULATION:
INVERTER:
AC Output Power: 36.25A AC Output Current Max
36.25A x 1.25 = 45.31A
50 AMP OCPD PER 30kW INVERTER OUTPUT

#8 AWG THWN-2 = 50A (75°C)
(PER TABLE CEC 310.16) (CU)

TEMP. CONDITIONS: OUTDOOR WIRE RUN -
AMBIENT TEMP. = 38°C
(3) CURRENT CARRYING CONDUCTORS
IN A RACEWAY (SHARED CONDUIT)
(PER TABLE CEC 310.15(B)(3)(a) = 1.0

50A x 1.0 = 50A = 50A TEMP. ADJUSTED
#8 CURRENT = 50A @ 75°C PER CEC 110.14(C)
#8 AWG CONDUCTOR IS MINIMUM ALLOWABLE (CU)

MAX/COLD TEMP PV VOLTAGE CALCULATION:
LONGi SOLAR LR4-72HPH-455M
Voc: 49.5V
Temp. Coefficient: -0.270%V/C
SAN MATEO CITY: CLIMATE ZONE 3C
WINTER DB = 31°F = -0.56°C*
Low Temp: -0.56°C (25.56°Δ)
Modules in Series: 16, 17, or 18

(49.5 V) x (0.0027 V/°C) x (25.56°) = 3.42 VΔ
49.5 Voc + 3.42 VΔ = 52.92 Voc(corr)
(52.92 V) x (15) = 793.7 VDC max (this is < 1000 VDC)
(52.92 V) x (16) = 846.7 VDC max (this is < 1000 VDC)
(53.14 V) x (17) = 899.6 VDC max (this is < 1000 VDC)
(52.57 V) x (18) = 952.5 VDC max (this is < 1000 VDC)

* = Per ASHRAE table

DESIGN TEMPERATURES
SAN MATEO CITY: CLIMATE ZONE 3C
WINTER DB = 31°F = -0.56°C
SUMMER DB = 87.8°F = 31°C
3-1/2" ABOVE ROOF = 114.8°F = 44°C

CEC AC kW CALCULATION

Inverter Model Number	PV Module Model Number	PV Module Count	PV Module PTC (Watts)	Inverter Effeciency (%)	CEC AC kW Rating
CPS SCA60KTL-DO/US-480 [480V] [SI1-JUN20]	LR4-72HPH-455M	1030	426.3	98.5	432.503
CPS SCA36KTL-DO/US-480 [480V] [SI1-JUN20]	LR4-72HPH-455M	90	426.3	97.5	37.408
SE40KUS [480V]	LR4-72HPH-455M	113	426.3	98.5	47.449
SE30KUS [480V]	LR4-72HPH-455M	168	426.3	98.5	70.544
	Total	1401		Total	587.904

600V HEAVY DUTY AC VERIFIABLE DISCONNECT SCHEDULE

(WITH CLASS 'L' CURRENT LIMITING FUSING)

DESIGNATION	DISCONNECT SIZE (VERIFIABLE)	MANUFACTURER'S CAT NO.	AIC RATING
'FD'	800A 3P+SN 600VAC	SQUARE D #H367NR	200,000 AIC

SYSTEM SUMMARY

MODULE MODEL	LONGi SOLAR LR4-72HPH-455M
MODULE STC DC RATING	455W
TOTAL MODULE COUNT	1,401
TOTAL STC DC SYSTEM SIZE	637.455kW
TOTAL NOMINAL AC SYSTEM SIZE	496.00kW
TOTAL CEC-AC SYSTEM SIZE	587.904kW
INVERTER MODELS	(6) CHINT POWER SYSTEMS AMERICA CPS SCA60KTL-DO/US-480 [480V] [SI1-JUN20]
	(1) CHINT POWER SYSTEMS AMERICA CPS SCA36KTL-DO/US-480 [480V] [SI1-JUN20]
	(1) SOLAREDGE TECHNOLOGIES LTD. SE40KUS [480V]
	(2) SOLAREDGE TECHNOLOGIES LTD. SE30KUS [480V]
MODULE TILT	7° & 10°
ARRAY AZIMUTH	153°
POINT OF SERVICE FAULT CURRENT CONTRIBUTION	638 AMPS
POINT OF SERVICE RATING	100,000 AIC

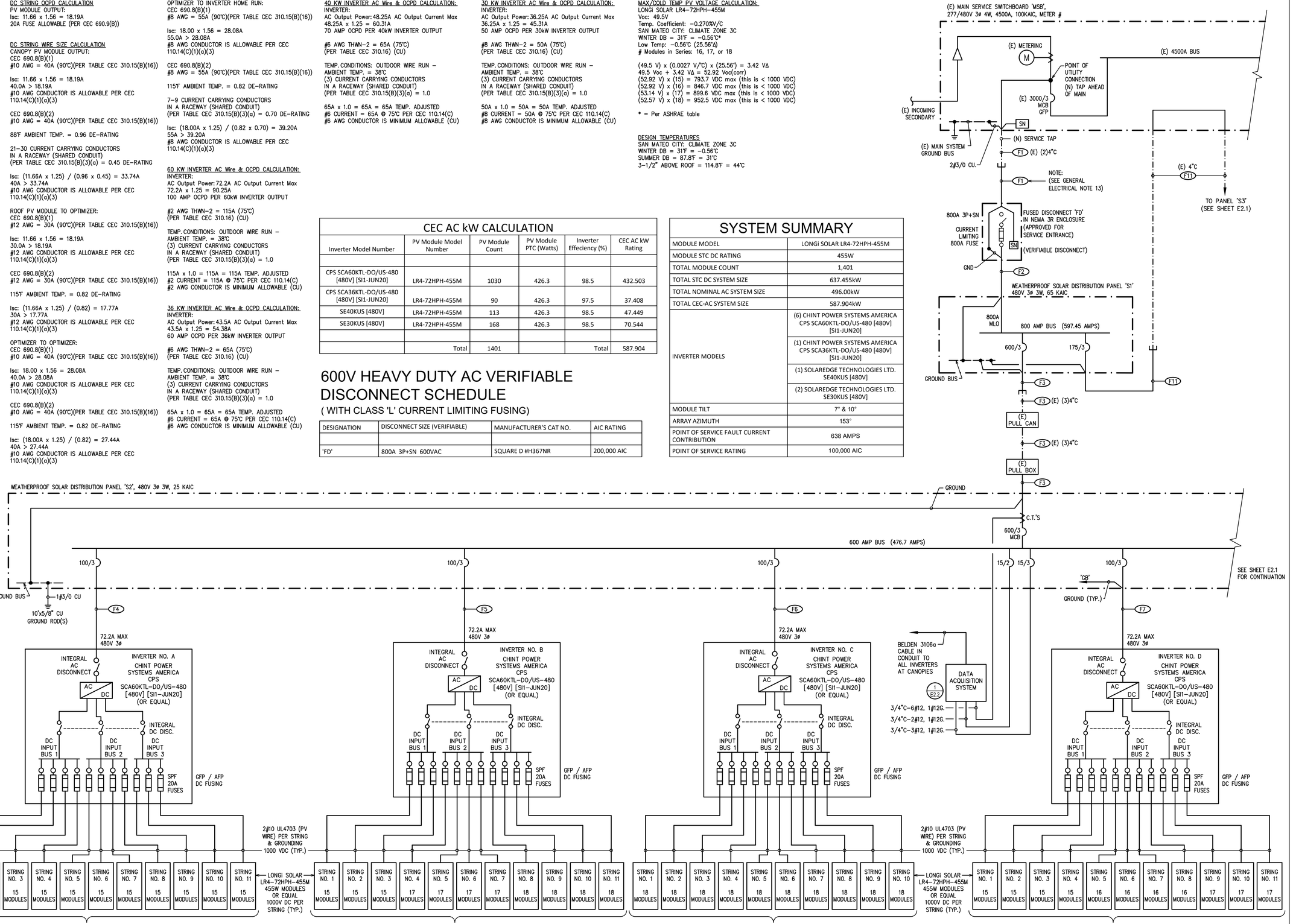

SINGLE LINE DIAGRAM 637.455 KW TOTAL

SCALE: NONE

SYSTEM HOST
800 North Humboldt Street
San Mateo, CA 94401

SYSTEM DEVELOPER
FOREFRONT POWER
100 Montgomery Street, Suite 725
San Francisco, CA 94104

GENERAL CONTRACTOR
COLLINS ELECTRICAL COMPANY INC.
1902 Channel Drive
West Sacramento, CA 95691
916-567-1100

ELECTRICAL ENGINEER
HARDIN-DAVIDSON ENGINEERING
HARDIN-DAVIDSON
356 Pollasky Avenue, Ste. 200
Clovis, CA 93612
559.323.4995

STRUCTURAL ENGINEERING AND STEEL CONSTRUCT
TEICHERT SOLAR
10620 Treena Street, Suite 140,
San Diego, CA 92131

ARCHITECT OF RECORD
MMPV design
Mariana Moncada, Architect
718 West Arbor Drive
San Diego, CA 92103
619.632.2883

ARCHITECT / ENGINEER OF RECORD
REGISTERED PROFESSIONAL ENGINEER R.J.HARDIN NO. 9125 ELECTRICAL STATE OF CALIFORNIA

PROJECT:
SAN MATEO COUNTY MEDICAL CENTER

222 W 39TH AVENUE
SAN MATEO, CA 94403

NO.	REVISION	DATE

DATE: 07.21.23

SHEET TITLE:
ELECTRICAL SINGLE LINE DIAGRAM

SHEET NO.:
E2.0

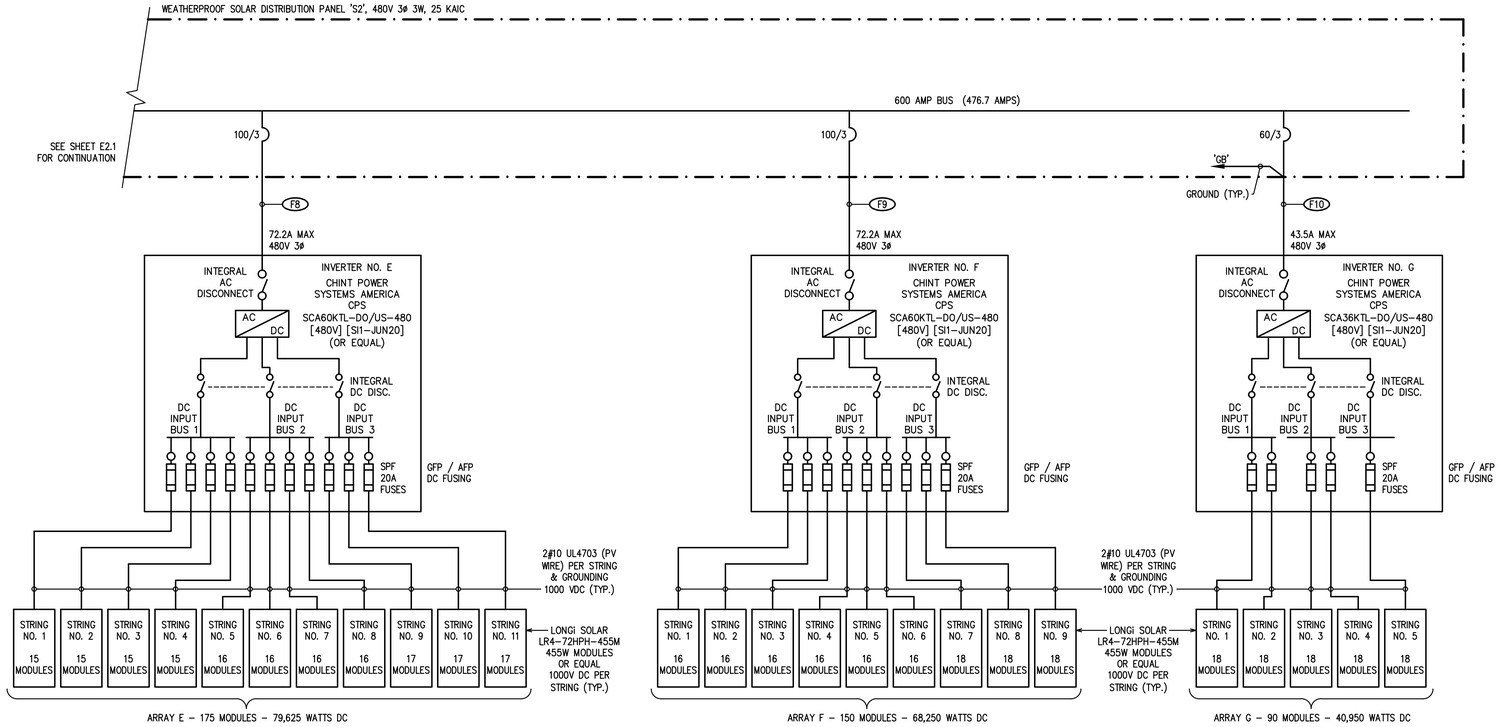

SINGLE LINE DIAGRAM 637.455 KW TOTAL

SCALE: NONE

SYSTEM HOST

COUNTY OF SAN MATEO CALIFORNIA

800 North Humboldt Street
San Mateo, CA 94401

SYSTEM DEVELOPER

FOREFRONT POWER

100 Montgomery Street, Suite 725
San Francisco, CA 94104

GENERAL CONTRACTOR

COLLINS ELECTRICAL COMPANY INC.

1902 Channel Drive
West Sacramento, CA 95691
916-567-1100

ELECTRICAL ENGINEER

HARDIN-DAVIDSON ENGINEERING

HARDIN-DAVIDSON
356 Pollasky Avenue, Ste. 200
Clovis, CA 93612
559.323.4995

STRUCTURAL ENGINEERING AND STEEL CONSTRUCT

TEICHERT SOLAR

10620 Treena Street, Suite 140,
San Diego, CA 92131

ARCHITECT OF RECORD

M M **P V** d e s i g n

Mariana Moncada, Architect
718 West Arbor Drive
San Diego, CA 92103
619.632.2883

ARCHITECT / ENGINEER OF RECORD

REGISTERED PROFESSIONAL ENGINEER R. J. HARDIN NO. 9125 ELECTRICAL STATE OF CALIFORNIA

PROJECT:

SAN MATEO COUNTY MEDICAL CENTER

222 W 39TH AVENUE
SAN MATEO, CA 94403

NO.	REVISION	DATE

DATE: 07.21.23

SHEET TITLE:

ELECTRICAL SINGLE LINE DIAGRAM

SHEET NO.:

E2.1

FEEDER SCHEDULE (F)

No.	Potential at Origin (Pi) (Volts)	System	Design Current (Amps)	Raceway Type	Sets of Cond.	Conductor Trade Size	Conductor Cross-Sectional Area (CM)	Conductor Material	DC Conductor Material Constant (K)	Q	Distance (ft)	Voltage Drop (VD) (Volts)	Potential at Load (Pl) (Volts)	Percent Voltage Drop (%VD)	Total Voltage Drop (%Vd AC)	'Total Voltage Drop (%Vd AC + DC)	Conduit & Conductors	No.	Feeder Origin	Feeder Destination
F1	480	AC 3-Phase	597.45	Steel	2	600 kCMIL	1200000	CU	12.9	1.1682	70	0.91	479.09	0.19	0.19	n/a	TWO: 4"C-3#600 KCMIL, 1#3/0 NEUT., 1#3/0 GND. (CU) (25.02% FILL)	F1	Main Swbd. 'MSB'	Fused Disconnect 'FD'
F2	480	AC 3-Phase	597.45	Steel	3	300 kCMIL	900000	CU	12.9	1.0490	5	0.08	479.92	0.02	0.21	n/a	THREE: 3"C-3#300 KCMIL, 1#1/0 GND. (CU) (21.56% FILL)	F2	Fused Disconnect 'FD'	Panel 'S1'
F3	480	AC 3-Phase	476.7	PVC	3	400 kCMIL	1200000	CU	12.9	1.0280	535	4.88	475.12	1.02	1.22	n/a	THREE: 4"C-3#400 KCMIL, 1#2/0 GND. (CU) (15.8% FILL)	F3	Panel 'S1'	Panel 'S2'
F4	480	AC 3-Phase	72.2	PVC	1	2	66360	CU	12.9	1.0000	100	2.43	477.57	0.51	1.73	2.29	1-1/4"C-3#2, 1#8 GND. (CU) (26.5% FILL)	F4	Panel 'S2'	Inverter No. A
F5	480	AC 3-Phase	72.2	PVC	1	2	66360	CU	12.9	1.0000	155	3.77	476.23	0.79	2.01	2.51	1-1/4"C-3#2, 1#8 GND. (CU) (26.5% FILL)	F5	Panel 'S2'	Inverter No. B
F6	480	AC 3-Phase	72.2	PVC	1	2	66360	CU	12.9	1.0000	215	5.23	474.77	1.09	2.31	2.82	1-1/4"C-3#2, 1#8 GND. (CU) (26.5% FILL)	F6	Panel 'S2'	Inverter No. C
F7	480	AC 3-Phase	72.2	PVC	1	1	83690	CU	12.9	1.0000	270	5.20	474.80	1.08	2.31	2.82	1-1/2"C-3#1, 1#6 GND. (CU) (26.14% FILL)	F7	Panel 'S2'	Inverter No. D
F8	480	AC 3-Phase	72.2	PVC	1	1/0	105600	CU	12.9	1.0000	325	4.96	475.04	1.03	2.26	2.77	1-1/2"C-3#1/0, 1#6 GND. (CU) (30.56% FILL)	F8	Panel 'S2'	Inverter No. E
F9	480	AC 3-Phase	72.2	PVC	1	2/0	133100	CU	12.9	1.0341	395	4.95	475.05	1.03	2.25	2.67	1-1/2"C-3#1, 1#4 GND. (CU) (26.14% FILL)	F9	Panel 'S2'	Inverter No. F
F10	480	AC 3-Phase	43.5	PVC	1	1	83690	CU	12.9	1.0000	450	5.23	474.77	1.09	2.31	2.73	1-1/2"C-3#1, 1#6 GND. (CU) (27.73% FILL)	F10	Panel 'S2'	Inverter No. G
F11	480	AC 3-Phase	120.75	Steel	1	4/0	211600	CU	12.9	1.0362	350	4.62	475.38	0.96	1.17	n/a	4"C-3#4/0, 1#4 GND. (CU) (8.4% FILL)	F11	Panel 'S1'	Panel 'S3'
F12	480	AC 3-Phase	48.25	Steel	1	6	26240	CU	12.9	1.0000	10	0.41	479.59	0.09	1.25	1.94	1"C-3#6, 1#8 GND. (CU) (21.9% FILL)	F12	Panel 'S3'	Inverter No. R1
F13	480	AC 3-Phase	36.25	Steel	1	6	26240	CU	12.9	1.0000	160	4.94	475.06	1.03	2.20	2.70	1"C-3#6, 1#8 GND. (CU) (21.93% FILL)	F13	Panel 'S3'	Inverter No. R2
F14	480	AC 3-Phase	36.25	Steel	1	6	26240	CU	12.9	1.0000	160	4.94	475.06	1.03	2.20	2.95	1"C-3#6, 1#8 GND. (CU) (21.93% FILL)	F14	Panel 'S3'	Inverter No. R3
A-11	625.5	DC	10.92	n/a-DC	1	10	10380	CU	12.9	n/a	130	3.53	621.97	0.56	n/a	n/a	2#10 (CU)	A-11	Inverter No. A	Worst Case DC String
B-10	750.6	DC	10.92	n/a-DC	1	10	10380	CU	12.9	n/a	140	3.80	746.80	0.51	n/a	n/a	2#10 (CU)	B-10	Inverter No. B	Worst Case DC String
C-10	750.6	DC	10.92	n/a-DC	1	10	10380	CU	12.9	n/a	140	3.80	746.80	0.51	n/a	n/a	2#10 (CU)	C-10	Inverter No. C	Worst Case DC String
D-11	708.9	DC	10.92	n/a-DC	1	10	10380	CU	12.9	n/a	135	3.66	705.24	0.52	n/a	n/a	2#10 (CU)	D-11	Inverter No. D	Worst Case DC String
E-11	708.9	DC	10.92	n/a-DC	1	10	10380	CU	12.9	n/a	135	3.66	705.24	0.52	n/a	n/a	2#10 (CU)	E-11	Inverter No. E	Worst Case DC String
F-9	750.6	DC	10.92	n/a-DC	1	10	10380	CU	12.9	n/a	115	3.12	747.48	0.42	n/a	n/a	2#10 (CU)	F-9	Inverter No. F	Worst Case DC String
G-5	750.6	DC	10.92	n/a-DC	1	10	10380	CU	12.9	n/a	115	3.12	747.48	0.42	n/a	n/a	2#10 (CU)	G-5	Inverter No. G	Worst Case DC String
R1-4	920	DC	18	n/a-DC	1	8	16510	CU	12.9	n/a	225	6.33	913.67	0.69	n/a	n/a	2#8 (CU)	R1-4	Inverter No. R1	Worst Case DC String
R2-3	920	DC	18	n/a-DC	1	8	16510	CU	12.9	n/a	165	4.64	915.36	0.50	n/a	n/a	2#8 (CU)	R2-3	Inverter No. R2	Worst Case DC String
R3-3	920	DC	18	n/a-DC	1	8	16510	CU	12.9	n/a	245	6.89	913.11	0.75	n/a	n/a	2#8 (CU)	R3-3	Inverter No. R3	Worst Case DC String

ROOF DC STRING HOMERUNS

MAXIMUM NUMBER OF CU #8 PV WIRES (PV WIRE + GROUND)

CONDUIT TRADE SIZE	CONDUIT LENGTH 24" OR LESS (60% FILL)	CONDUIT LENGTH OVER 24" (40% FILL)		
	LFMC	LFMC	EMT	GRC
3/4"	3	2	2	2
1"	5	3	3	3
1-1/4"	10	6	6	6
1-1/2"	13	9	9	9
2"	22	9	9	9

TABLE ASSUMING CU #8 PV WIRE WITH .33" O.D.

CANOPY DC STRING HOME RUNS

MAXIMUM NUMBER OF CU #10 PV WIRES (PV WIRE + GROUND)

CONDUIT TRADE SIZE	CONDUIT LENGTH 24" OR LESS (60% FILL)	CONDUIT LENGTH OVER 24" (40% FILL)	
	LFMC	LFMC	EMT
3/4"	5	3	3
1"	9	6	6
1-1/4"	16	11	10
1-1/2"	22	14	14
2"	30	24	24
2-1/2"	30	30	30
3"	30	30	30

TABLE ASSUMING CU #10 PV WIRE WITH .26" O.D.

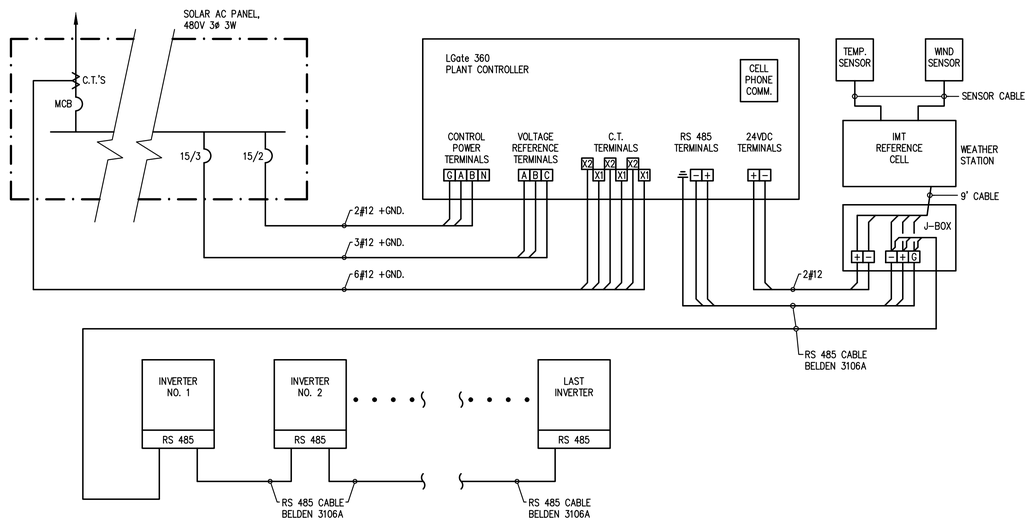

TYPICAL DATA ACQUISITION SYSTEM WIRING DIAGRAM

SCALE: NONE

1

SYSTEM HOST

COUNTY OF SAN MATEO CALIFORNIA

800 North Humboldt Street
San Mateo, CA 94401

SYSTEM DEVELOPER

FOREFRONT POWER

100 Montgomery Street, Suite 725
San Francisco, CA 94104

GENERAL CONTRACTOR

COLLINS ELECTRICAL COMPANY INC.

1902 Channel Drive
West Sacramento, CA 95691
916-567-1100

ELECTRICAL ENGINEER

HARDIN-DAVIDSON ENGINEERING

HARDIN-DAVIDSON
356 Pollasky Avenue, Ste. 200
Clovis, CA 93612
559.323.4995

STRUCTURAL ENGINEERING AND STEEL CONSTRUCT

TEICHERT SOLAR

10620 Treena Street, Suite 140,
San Diego, CA 92131

ARCHITECT OF RECORD

M M P V d e s i g n

Mariana Moncada, Architect
718 West Arbor Drive
San Diego, CA 92103
619.632.2883

ARCHITECT / ENGINEER OF RECORD

REGISTERED PROFESSIONAL ENGINEER R.J.HARDIN NO. 9125 ELECTRICAL STATE OF CALIFORNIA

PROJECT:

SAN MATEO COUNTY MEDICAL CENTER

222 W 39TH AVENUE
SAN MATEO, CA 94403

NO.	REVISION	DATE

DATE: 07.21.23

SHEET TITLE:

ELECTRICAL FEEDER SCHEDULE

SHEET NO.:

E2.2

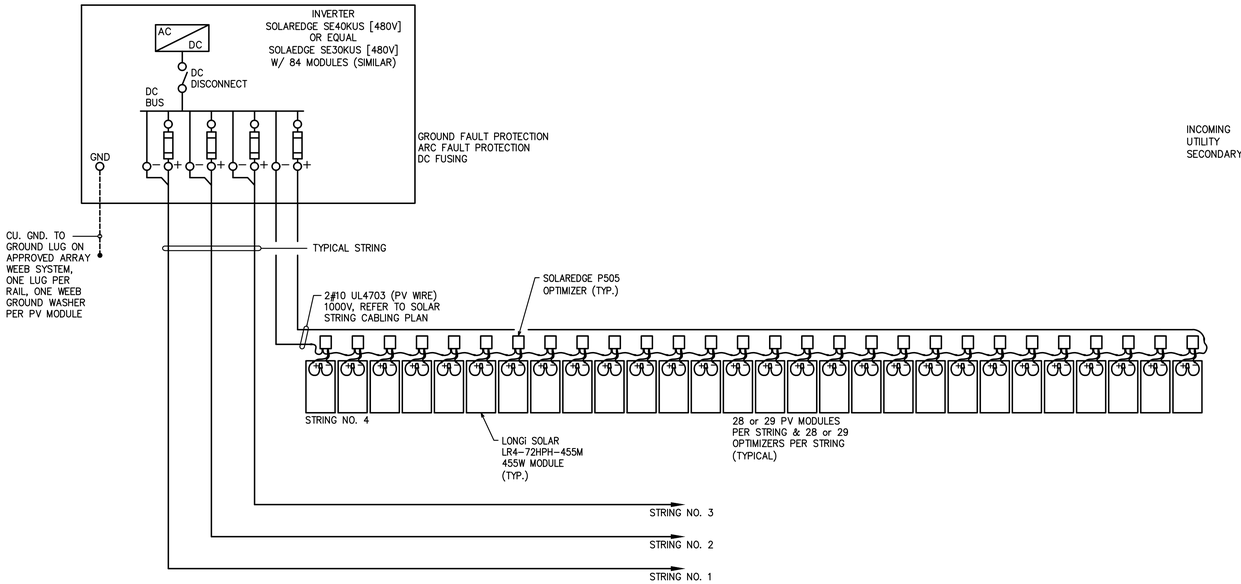

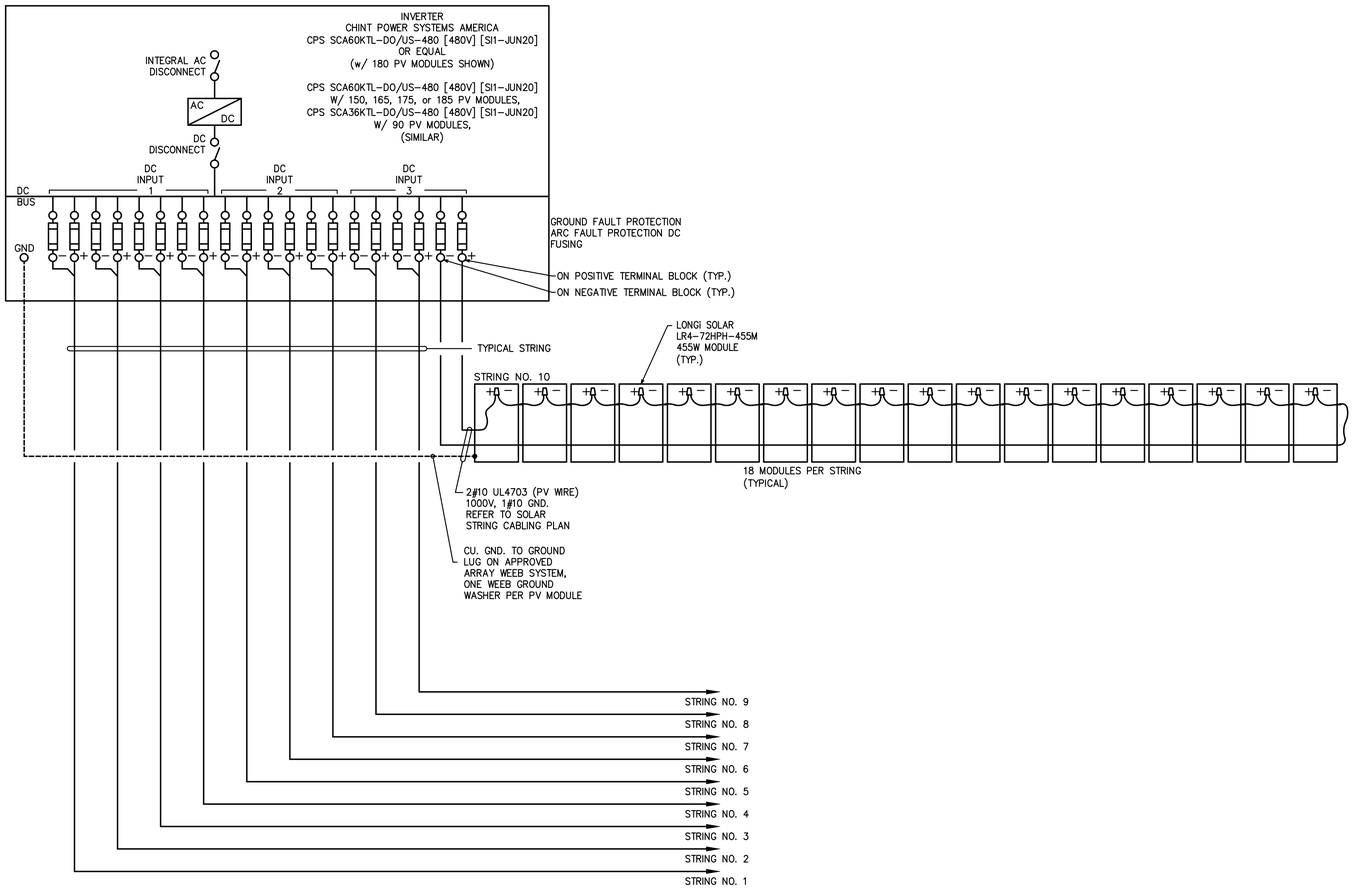

TYPICAL DC LINE DIAGRAM

SCALE: NONE

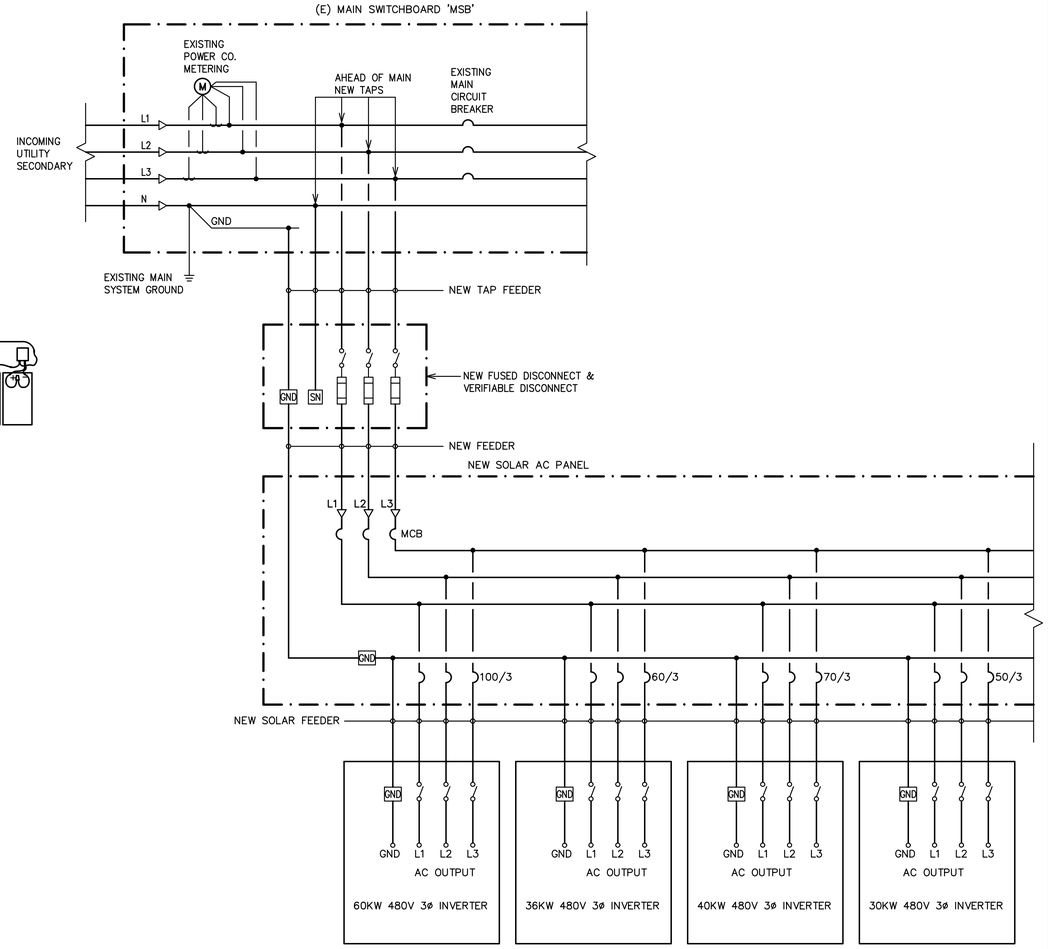

TYPICAL THREE LINE DIAGRAM

SCALE: NONE

SYSTEM HOST

800 North Humboldt Street
San Mateo, CA 94401

SYSTEM DEVELOPER

FOREFRONT POWER

100 Montgomery Street, Suite 725
San Francisco, CA 94104

GENERAL CONTRACTOR

COLLINS ELECTRICAL COMPANY INC.

1902 Channel Drive
West Sacramento, CA 95691
916-567-1100

ELECTRICAL ENGINEER

HARDIN-DAVIDSON ENGINEERING

HARDIN-DAVIDSON
356 Pollasky Avenue, Ste. 200
Clovis, CA 93612
559.323.4995

STRUCTURAL ENGINEERING AND STEEL CONSTRUCT

TEICHERT SOLAR

10620 Treena Street, Suite 140,
San Diego, CA 92131

ARCHITECT OF RECORD

M M **P V** d e s i g n

Mariana Moncada, Architect
718 West Arbor Drive
San Diego, CA 92103
619.632.2883

ARCHITECT / ENGINEER OF RECORD

REGISTERED PROFESSIONAL ENGINEER
R. J. HARDIN
NO. 9125
ELECTRICAL
STATE OF CALIFORNIA

PROJECT:

SAN MATEO COUNTY MEDICAL CENTER

222 W 39TH AVENUE
SAN MATEO, CA 94403

NO.	REVISION	DATE

DATE: 07.21.23

SHEET TITLE:

TYPICAL ELECTRICAL THREE LINE DIAGRAM

SHEET NO.:

E3.0

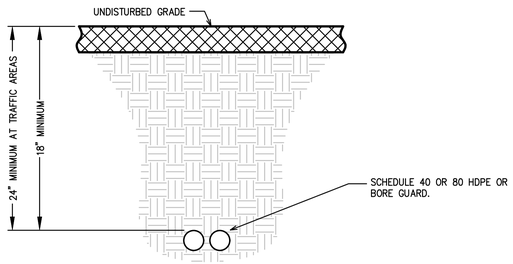

HORIZONTAL BORE DETAIL

NO SCALE

4

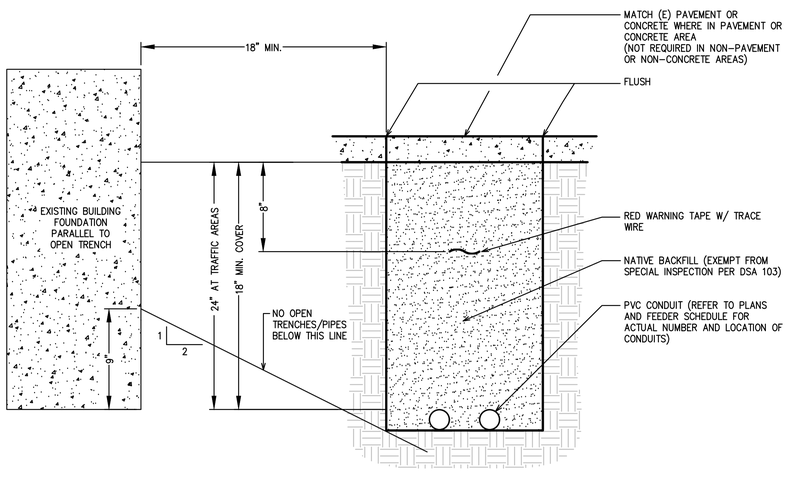

TRENCH THROUGH PAVEMENT TRAFFIC DETAIL

NO SCALE

NOTES:
1. TRENCHING ONLY WHERE REQUIRED

3

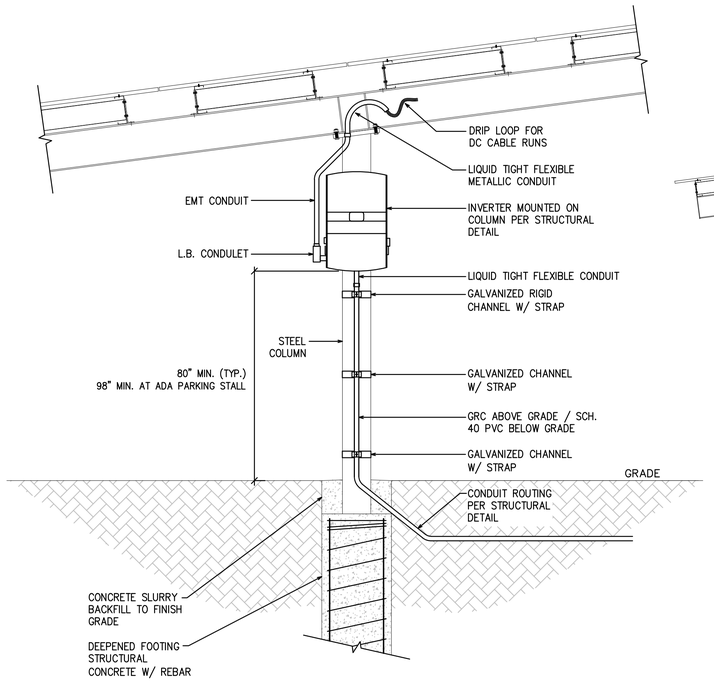

TYPICAL PV CANOPY CONDUIT RISER DETAIL

NO SCALE

NOTE: ONE REQUIRED PER ARRAY STRUCTURE

2

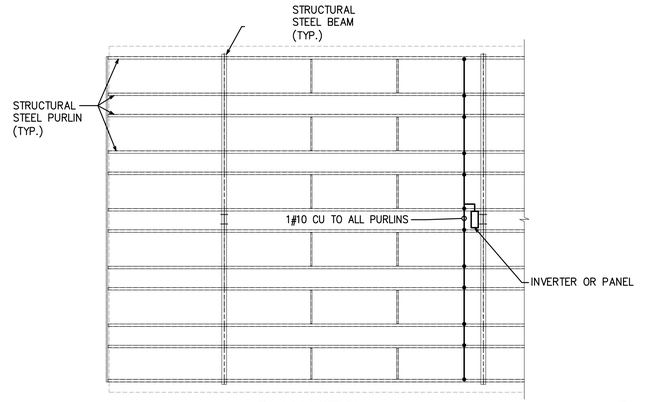

PLAN VIEW

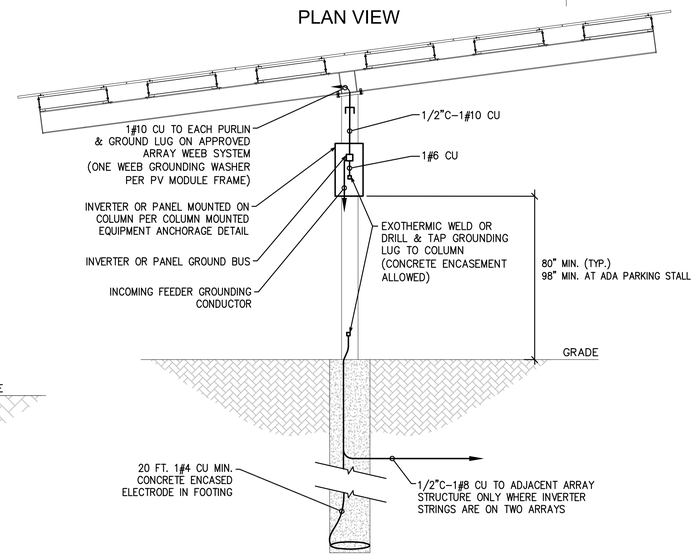

SECTION VIEW

TYPICAL PV CANOPY GROUNDING DETAIL

NO SCALE

NOTE: ONE REQUIRED PER ARRAY STRUCTURE

1

TYPICAL ROOF TOP CONDUIT DETAIL

SCALE: NONE

5

SYSTEM HOST

COUNTY OF SAN MATEO CALIFORNIA

800 North Humboldt Street
San Mateo, CA 94401

SYSTEM DEVELOPER

FOREFRONT POWER

100 Montgomery Street, Suite 725
San Francisco, CA 94104

GENERAL CONTRACTOR

COLLINS ELECTRICAL COMPANY INC.

1902 Channel Drive
West Sacramento, CA 95691
916-567-1100

ELECTRICAL ENGINEER

HARDIN-DAVIDSON ENGINEERING

HARDIN-DAVIDSON
356 Pollasky Avenue, Ste. 200
Clovis, CA 93612
559.323.4995

STRUCTURAL ENGINEERING AND STEEL CONSTRUCT

TEICHERT SOLAR

10620 Treena Street, Suite 140,
San Diego, CA 92131

ARCHITECT OF RECORD

M M **P** **V** d e s i g n

Mariana Moncada, Architect
718 West Arbor Drive
San Diego, CA 92103
619.632.2883

ARCHITECT / ENGINEER OF RECORD

REGISTERED PROFESSIONAL ENGINEER R.J.HARDIN NO. 9125 ELECTRICAL STATE OF CALIFORNIA

PROJECT:

SAN MATEO COUNTY MEDICAL CENTER

222 W 39TH AVENUE
SAN MATEO, CA 94403

NO.	REVISION	DATE

DATE: 07.21.23

SHEET TITLE:

ELECTRICAL DETAILS

SHEET NO.:

E4.0

8½"

3/4" MIN

WARNING

ELECTRIC SHOCK HAZARD
IF A GROUND FAULT IS INDICATED, NORMALLY GROUNDED CONDUCTORS MAY BE UNGROUNDED AND ENERGIZED

1/4"

3"

LABEL - 1
SCALE: NONE
1

LOCATION:	INVERTERS
BACKGROUND	RED
LETTERING	WHITE
NOTES:	

8½"

3/4" MIN

WARNING

ELECTRIC SHOCK HAZARD
– DO NOT TOUCH TERMINALS –
TERMINAL ON BOTH THE LINE SIDE AND LOAD SIDE MAY BE ENERGIZED IN THE OPEN POSITION

1/4"

3"

LABEL - 2
SCALE: NONE
2

LOCATION:	AC DISCONNECTS & PANELBOARDS
BACKGROUND	RED
LETTERING	WHITE
NOTES:	

8½"

3/4" MIN

PV SYSTEM DISCONNECT

INPUT VALUE AT DC BUS

RATED MAXIMUM POWER–POINT CURRENT:	33A
RATED MAXIMUM POWER–POINT VOLTAGE:	751V
MAXIMUM SYSTEM VOLTAGE:	953V
SHORT–CIRCUIT CURRENT:	35A

1/4"

3"

LABEL - 3
SCALE: NONE
3

LOCATION:	60kW INVERTER W/ 150 MODULES
BACKGROUND	RED
LETTERING	WHITE
NOTES:	

8½"

3/4" MIN

WARNING

ELECTRIC SHOCK HAZARD
THE DC CONDUCTORS OF THIS PHOTOVOLTAIC SYSTEM ARE UNGROUNDED AND MAY BE ENERGIZED

1/4"

3"

LABEL - 4
SCALE: NONE
4

LOCATION:	INVERTERS
BACKGROUND	RED
LETTERING	WHITE
NOTES:	

8½"

3/4" MIN

PV SYSTEM DISCONNECT

NOMINAL OPERATING AC VOLTAGE: 480VAC
MAXIMUM AC OUTPUT CURRENT: 598AAC

1/4"

2"

LABEL - 5
SCALE: NONE
5

LOCATION:	AC DISCONNECT 'FD'
BACKGROUND	RED
LETTERING	WHITE
NOTES:	

9½"

3/4" MIN

WARNING: SOLAR ELECTRIC SYSTEM

1/4" MIN

LABEL - 6
SCALE: NONE
6

LOCATION:	MAIN SERVICE DISCONNECT
BACKGROUND	RED
LETTERING	WHITE
NOTES:	

7"

3/4" MIN

WARNING

BUILDING IS SUPPLIED WITH AN ALTERNATE POWER SOURCE.

(10) INVERTER DISCONNECTS

(1) PV AC DISCONNECT

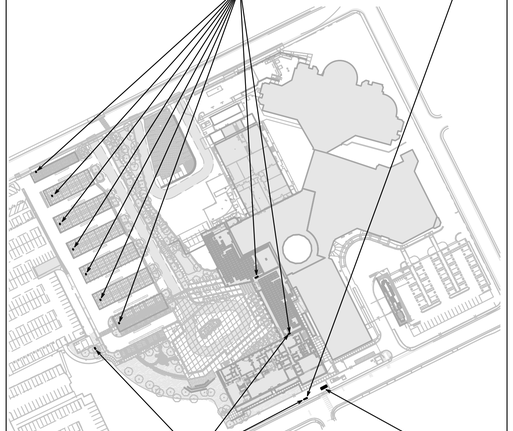

(3) PV AC PANELS

MAIN SERVICE (YOU ARE HERE)

N

PV SYSTEM ELECTRIC POWER PRODUCTION SOURCES

11"

LABEL - 7
SCALE: NONE
7

LOCATION:	MAIN SERVICE DISCONNECT
BACKGROUND	RED
LETTERING	WHITE
NOTES:	1 SIGN AT (E) SERVICE METER. PLACE ADDITIONAL SIGN AT SOLAR AC SYSTEM DISCONNECT WHERE NOT LOCATED WITHIN 25' & IN VIEW OF (E) SERVICE METER.

4"
MIN. DIM.

⚠DANGER
Arc Flash & Shock Hazard
No Live Work - Equipment shall be de-energized prior to work.

2" MIN. DIM.

ARC FLASH WITH EXAMPLE TEXT AND DIMENSIONS

LABEL - 8
SCALE: NONE
8

LOCATION:	INVERTER DISCONNECTS, AC DISCONNECT, PANEL
BACKGROUND	WHITE, RED OR YELLOW
LETTERING	BLACK AND/OR RED
NOTES:	

7½"

3/4" MIN

WARNING: PHOTOVOLTAIC POWER SOURCE

1½"

LABEL - 9
SCALE: NONE
9

LOCATION:	DC ENCLOSURES, RACEWAYS AND CONDUITS
BACKGROUND	RED
LETTERING	WHITE
NOTES:	EXPOSED CONDUIT EVERY 10 FT.

WARNING LABELS & MARKING NOTES:

1. MARKING IS REQUIRED ON INTERIOR AND EXTERIOR DIRECT–CURRENT (DC) CONDUIT, ENCLOSURES, RACEWAYS, CABLE ASSEMBLIES, JUNCTION BOXES, COMBINER BOXES AND DISCONNECTS.
2. THE MATERIALS USED FOR MARKING SHALL BE REFLECTIVE, WEATHER RESISTANT AND SUITABLE FOR THE ENVIRONMENT. MARKING AS REQUIRED IN SECTIONS 605.11.1.2 THROUGH 605.11.1.4 SHALL HAVE ALL LETTERS CAPITAL SIZED WITH A MINIMUM HEIGHT OF 3/8 INCH (9.5 MM) WHITE ON RED BACKGROUND.
3. THE MARKING SHALL CONTAIN THE WORDS "WARNING: PHOTOVOLTAIC POWER SOURCE."
4. THE MARKING SHALL BE PLACED ADJACENT TO THE MAIN SERVICE DISCONNECT IN A LOCATION CLEARLY VISIBLE FROM THE LOCATION WHERE THE DISCONNECT IS OPERATED.
5. MARKING SHALL BE PLACED ON INTERIOR AND EXTERIOR DC CONDUIT. RACEWAYS, ENCLOSURES AND CABLE ASSEMBLIES EVERY 10 FEET (3048 MM), WITHIN 1 FOOT (305 MM) OF TURNS OR BENDS AND WITHIN 1 FOOT (305 MM) ABOVE AND BELOW PENETRATIONS OF ROOF/CEILING ASSEMBLIES, WALLS OR BARRIERS.

SYSTEM HOST

COUNTY OF SAN MATEO CALIFORNIA

800 North Humboldt Street
San Mateo, CA 94401

SYSTEM DEVELOPER

FOREFRONT POWER

100 Montgomery Street, Suite 725
San Francisco, CA 94104

GENERAL CONTRACTOR

COLLINS ELECTRICAL COMPANY INC.

1902 Channel Drive
West Sacramento, CA 95691
916-567-1100

ELECTRICAL ENGINEER

HARDIN-DAVIDSON ENGINEERING

HARDIN-DAVIDSON
356 Pollasky Avenue, Ste. 200
Clovis, CA 93612
559.323.4995

STRUCTURAL ENGINEERING AND STEEL CONSTRUCT

TEICHERT SOLAR

10620 Treena Street, Suite 140,
San Diego, CA 92131

ARCHITECT OF RECORD

M M **P V** d e s i g n

Mariana Moncada, Architect
718 West Arbor Drive
San Diego, CA 92103
619.632.2883

ARCHITECT / ENGINEER OF RECORD

REGISTERED PROFESSIONAL ENGINEER
R. J. HARDIN
NO. 9125
ELECTRICAL
STATE OF CALIFORNIA

PROJECT:

SAN MATEO COUNTY MEDICAL CENTER

222 W 39TH AVENUE
SAN MATEO, CA 94403

NO.	REVISION	DATE

DATE: 07.21.23

SHEET TITLE:

TYPICAL ELECTRICAL SOLAR WARNING LABELS

SHEET NO.:

E5.0

8½"

3/8"

1/4"

3"

PV SYSTEM DISCONNECT

INPUT VALUE AT DC BUS

RATED MAXIMUM POWER-POINT CURRENT:	22A
RATED MAXIMUM POWER-POINT VOLTAGE:	751V
MAXIMUM SYSTEM VOLTAGE:	953V
SHORT-CIRCUIT CURRENT:	24A

LABEL - 15 (15)

SCALE: NONE

LOCATION:	36kW INVERTER
BACKGROUND	RED
LETTERING	WHITE
NOTES:	

8½"

3/8"

1/4"

3"

PV SYSTEM DISCONNECT

INPUT VALUE AT DC BUS

RATED MAXIMUM POWER-POINT CURRENT:	49A
RATED MAXIMUM POWER-POINT VOLTAGE:	840V
MAXIMUM SYSTEM VOLTAGE:	1000V
SHORT-CIRCUIT CURRENT:	55A

LABEL - 16 (16)

SCALE: NONE

LOCATION:	40kW INVERTERS
BACKGROUND	RED
LETTERING	WHITE
NOTES:	

8½"

3/8"

1/4"

3"

PV SYSTEM DISCONNECT

INPUT VALUE AT DC BUS

RATED MAXIMUM POWER-POINT CURRENT:	37A
RATED MAXIMUM POWER-POINT VOLTAGE:	840V
MAXIMUM SYSTEM VOLTAGE:	1000V
SHORT-CIRCUIT CURRENT:	55A

LABEL - 17 (17)

SCALE: NONE

LOCATION:	30kW INVERTERS
BACKGROUND	RED
LETTERING	WHITE
NOTES:	

7½"

3/8"

2"

RAPID SHUTDOWN SWITCH FOR SOLAR PV SYSTEM

LABEL - 18 (18)

SCALE: NONE

LOCATION:	INVERTER VISIBLE DISCONNECT
BACKGROUND	RED
LETTERING	WHITE
NOTES:	

3/8"

3/16"

SOLAR PV SYSTEM EQUIPPED WITH RAPID SHUTDOWN

TURN RAPID SHUTDOWN SWITCH TO THE "OFF" POSITION TO SHUTDOWN PV SYSTEM AND REDUCE SHOCK HAZARD IN ARRAY

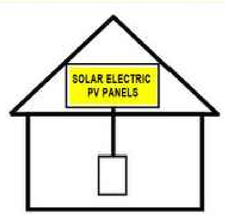

LABEL - 19 (19)

SCALE: NONE

LOCATION:	MAIN SWITCHBOARD, PV DIST. PANEL 'S3' & INVERTERS 'R1', 'R2', & 'R3'
BACKGROUND	RED
LETTERING	WHITE
NOTES:	

9"

3/8"

3½"

CAUTION: OPERATING MAIN SERVICE DISCONNECT WILL NOT INTERRUPT THE PHOTOVOLTAIC BACKFEED

LABEL - 10 (10)

SCALE: NONE

LOCATION:	MAIN SERVICE DISCONNECT
BACKGROUND	RED
LETTERING	WHITE
NOTES:	

5"

3"

FOREFRONT POWER

100 MONTGOMERY STREET, SUITE 725
SAN FRANCISCO, CA 94104
FOR SERVICE CALL (855) 204-5083

LABEL - 11 (11)

SCALE: NONE

LOCATION:	AC DISCONNECT, PANELS, DAS, & INVERTERS
BACKGROUND	BLUE
LETTERING	WHITE
NOTES:	

8½"

3/8"

1/4"

3"

PV SYSTEM DISCONNECT

INPUT VALUE AT DC BUS

RATED MAXIMUM POWER-POINT CURRENT:	44A
RATED MAXIMUM POWER-POINT VOLTAGE:	751V
MAXIMUM SYSTEM VOLTAGE:	953V
SHORT-CIRCUIT CURRENT:	47A

LABEL - 12 (12)

SCALE: NONE

LOCATION:	60kW INVERTERS W/ 180 OR 185 MODULES
BACKGROUND	RED
LETTERING	WHITE
NOTES:	

8½"

3/8"

1/4"

3"

PV SYSTEM DISCONNECT

INPUT VALUE AT DC BUS

RATED MAXIMUM POWER-POINT CURRENT:	44A
RATED MAXIMUM POWER-POINT VOLTAGE:	709V
MAXIMUM SYSTEM VOLTAGE:	900V
SHORT-CIRCUIT CURRENT:	47A

LABEL - 13 (13)

SCALE: NONE

LOCATION:	60kW INVERTERS W/ 175 MODULES
BACKGROUND	RED
LETTERING	WHITE
NOTES:	

8½"

3/8"

1/4"

3"

PV SYSTEM DISCONNECT

INPUT VALUE AT DC BUS

RATED MAXIMUM POWER-POINT CURRENT:	44A
RATED MAXIMUM POWER-POINT VOLTAGE:	626V
MAXIMUM SYSTEM VOLTAGE:	794V
SHORT-CIRCUIT CURRENT:	47A

LABEL - 14 (14)

SCALE: NONE

LOCATION:	60kW INVERTERS W/ 165 MODULES
BACKGROUND	RED
LETTERING	WHITE
NOTES:	

SYSTEM HOST

800 North Humboldt Street
San Mateo, CA 94401

SYSTEM DEVELOPER

FOREFRONT POWER

100 Montgomery Street, Suite 725
San Francisco, CA 94104

GENERAL CONTRACTOR

COLLINS ELECTRICAL COMPANY INC.

1902 Channel Drive
West Sacramento, CA 95691
916-567-1100

ELECTRICAL ENGINEER

HARDIN-DAVIDSON ENGINEERING

HARDIN-DAVIDSON
356 Pollasky Avenue, Ste. 200
Clovis, CA 93612
559.323.4995

STRUCTURAL ENGINEERING AND STEEL CONSTRUCT

TEICHERT SOLAR

10620 Treena Street, Suite 140,
San Diego, CA 92131

ARCHITECT OF RECORD

M M P V d e s i g n

Mariana Moncada, Architect
718 West Arbor Drive
San Diego, CA 92103
619.632.2883

ARCHITECT / ENGINEER OF RECORD

REGISTERED PROFESSIONAL ENGINEER
R. J. HARDIN
NO. 9125
ELECTRICAL
STATE OF CALIFORNIA

PROJECT:

SAN MATEO COUNTY MEDICAL CENTER

222 W 39TH AVENUE
SAN MATEO, CA 94403

NO.	REVISION	DATE

DATE: 07.21.23

SHEET TITLE:

TYPICAL ELECTRICAL SOLAR WARNING LABELS

SHEET NO.:

E5.1

CPS

Datasheet

NEW 36 kW, 1000 Vdc String Inverters for North America

The new, V2 version of the 36 kW (36 kVA) CPS three-phase string inverter is designed for rooftop and carport applications. The units are high performance, advanced and reliable inverters designed specifically for the North American environment and grid. High efficiency at 98.8% peak and 97.4% CEC, wide operating voltages, broad temperature ranges and a NEMA Type 4X enclosure enable this inverter platform to operate at high performance across many applications.

CPS 36KTL V2 ships with either the Standard wire-box or the Rapid Shutdown wire-box, each fully integrated and separable with touch-safe fusing, monitoring, and AC and DC disconnect switches. The integrated PLC transmitter in the Rapid Shutdown Wire-box enables PVRSS certified module-level rapid shutdown when used with APS RSD-S-PLC/RSD-D products. The CPS FlexOM Gateway enables monitoring, controls and remote product upgrades.



CPS SCA36KTL-DO/US-480 V2

Key Features

- NEC 2017/2020 PVRSS certified for rapid shutdown
- NEC-compliant & UL listed arc-fault circuit protection
- 15-90° mounting orientation for low-profile roof installs
- Optional FlexOM Gateway enables remote firmware upgrades
- Integrated AC and DC disconnect switches
- Copper- and Aluminum-compatible AC connections
- 3 MPPTs with 5 inputs each for maximum flexibility
- NEMA Type 4X outdoor rated enclosure
- UL 1741-SA certified to CA Rule 21, including SA8-SA18 VW
- UL 1741-SB and IEEE 1547-2018 certified
- Separable wire-box design for fast service
- Standard 10-year warranty with extensions up to 20 years



36/50/60KTL Standard Wire-box



36/50/60KTL Rapid Shutdown Wire-box

© CHINT POWER SYSTEMS AMERICA 2023/1-MKT NA

Chint Power Systems America
1380 Presidential Drive, Suite 100, Richardson, TX 75081
Tel: 855-584-7168 Mail: AmericaSales@chintpower.com Web: www.chintpowersystems.com

CPS

Technical Data

Model Name	CPS SCA36KTL-DO/US-480
DC Input	
Max. PV power	90 kW (33 kW per MPPT)
Max. DC input voltage	1000 Vdc
Operating DC input voltage range	200-950 Vdc
Start-up DC input voltage / power	330 V / 80 W
Number of MPP trackers	3
MPPT voltage range @ PF>0.99	400-850 Vdc
Max. PV short-circuit current (Isc x 1.25)	204 A (68 A per MPPT)
Number of DC inputs	15 Inputs, 5 per MPPT
DC disconnection type	Load-rated DC switch
DC surge protection	Type II MOV
AC Output	
Rated AC output power @ PF>0.99	36 kW
Max. AC apparent power (selectable)	36 kVA
Rated output voltage	480 Vac
Output voltage range[1]	422 - 528 Vac
Grid connection type	3Ø / PE / N (neutral optional)
Max. AC output current @ 480 Vac	43.5 A
Rated output frequency	60 Hz
Output frequency range[1]	57 - 63 Hz
Power factor	>0.99 (±0.8 adjustable)
Current THD @ rated load	<3%
Max. fault current contribution (1 cycle RMS)	73.2 A (1.68 PU)
Max. OCPD rating	125 A
AC disconnection type	Load-break rated AC switch
AC surge protection	Type II MOV
System and Performance	
Topology	Transformerless
Max. efficiency	98.8%
CEC efficiency	97.4%
Stand-by / night consumption	<3 W
Environment	
Enclosure protection degree	NEMA Type 4X
Cooling method	Variable speed cooling fans
Operating temperature range[2]	-22°F to +140°F / - 30°C to +60°C
Non-operating temperature range[3]	No low temp minimum to +158°F / +70°C maximum
Operating humidity	0 to 100%
Operating altitude	13123 ft / 4000 m (derating from 9843 ft / 3000 m)
Audible noise	<60 dBA @ 1 m and 25°C
Display and Communication	
User interface and display	LCD + LED
Inverter monitoring	SunSpec, Modbus RS485
Site-level monitoring	CPS FlexOM Gateway (1 per 32 inverters)
Modbus data mapping	CPS
Remote diagnostics / firmware upgrade functions	Standard / (with FlexOM Gateway)
Mechanical	
Dimensions (H x W x D)	39.4 x 23.6 x 10.24 in (1000 x 600 x 260 mm)
Weight	Inverter: 123.5 lbs (56 kg); Wire-box: 33 lbs (15 kg)
Mounting / installation angle[4]	15 to 90 degrees from horizontal (vertical or angled)
AC termination	M8 stud type terminal block (wire range: #6 - 3/0 AWG CU/AL; lugs not supplied)
DC termination[5]	Screw clamp, neg. busbar (RSD version[7]) wire range: #14 - #6 AWG CU
Fused string inputs (5 per MPPT)[6]	20 A fuses provided (fuse values up to 30 A acceptable)
Safety	
Certifications and standards	UL 1741-SA/SB Ed. 3, UL 1699B, UL 1998, CSA-C22.2 NO.107.1-01, IEEE 1547-2018, FCC PART15
Selectable grid standard	IEEE 1547a-2014, IEEE 1547-2018[7], CA Rule 21, ISO-NE, HECO
Smart-grid features	Volt-RideThru, Freq-RideThru, Ramp-Rate, Specified-PF, Volt-VAR, Freq-Watt, Volt-Watt
Warranty	
Standard	10 years
Extended terms	15 and 20 years

1) The output voltage and frequency ranges may differ according to the specific grid standard.
2) Active power derating begins at 45°C when PF=1 and MPPTs≥Vmin, and at 50°C when PF=1 and MPPTs≥700 Vdc.
3) See user manual for further requirements regarding non-operating conditions.
4) Shade Cover accessory required for installation angles of 75 degrees or less.
5) RSD wire-box only includes fuses and fuse holders on the positive polarity, compliant with NEC 2017/2020 Section 690.9(C).
6) Fuse values above 20 A have additional spacing requirements or require the use of the Y-Comb Terminal Block. See the user manual for further details.
7) Firmware version 1.72 or later required.

CPS

Datasheet

50/60kW, 1000Vdc String Inverters for North America

The 50 & 60kW (55 & 66kVA) medium power CPS three phase string inverters are designed for ground mount, large rooftop and carport applications. The units are high performance, advanced and reliable inverters designed specifically for the North American environment and grid. High efficiency at 98.8% peak and 98.5% CEC, wide operating voltages, broad temperature ranges and a NEMA Type 4X enclosure enable this inverter platform to operate at high performance across many applications. The CPS 50/60KTL products ship with either the Standard wire-box or the Rapid Shutdown wire-box, each fully integrated and separable with touch safe fusing, monitoring, and AC and DC disconnect switches. The integrated PLC transmitter in the Rapid Shutdown wire-box enables PVRSS certified module-level rapid shutdown when used with the Tigo TS4-F/TS4-A-F/TS4-A-2F products and APS RSD-S-PLC/RSD-D products. The CPS FlexOM Gateway enables monitoring, controls and remote product upgrades.



~~CPS SCA50KTL-DO/US-480~~
CPS SCA60KTL-DO/US-480

Key Features

- NEC 2017/2020 PVRSS Certified Rapid Shutdown
- 55 & 66kVA rating allows max rated Active Power @±0.91PF
- Selectable Max AC Apparent Power of 50/55kVA and 60/66kVA
- NEC 2014/17 compliant & UL listed Arc-Fault circuit protection
- 15-90° Mounting orientation for low profile roof installs
- Optional FlexOM Gateway enables remote FW upgrades
- Integrated AC & DC disconnect switches
- 3 MPPT's with 5 inputs each for maximum flexibility
- NEMA Type 4X outdoor rated, tough tested enclosure
- UL1741 SA Certified to CA Rule 21, including SA8 through SA18
- Separable wire-box design for fast service
- Standard 10 year warranty with extensions to 20 years



50/60KTL Standard Wire-box



50/60KTL Rapid Shutdown Wire-box

Tigo Enhanced APsmart

©CHINT POWER SYSTEMS AMERICA 2021/12-MKT NA

Chint Power Systems America
6800 Koll Center Parkway, Suite 235 Pleasanton, CA 94566
Tel: 855-584-7168 Mail: AmericaSales@chintpower.com Web: www.chintpowersystems.com

CPS

Technical Data

Model Name	~~CPS SCA50KTL-DO/US-480~~	CPS SCA60KTL-DO/US-480
DC Input		
Max. PV Power	90kW (33kW per MPPT)	
Max. DC Input Voltage	1000Vdc	
Operating DC Input Voltage Range	200-950Vdc	
Start-up DC Input Voltage / Power	330V / 80W	
Number of MPP Trackers	3	
MPPT Voltage Range @ PF>0.99	480-850Vdc	540-850Vdc
Max. PV Short-Circuit Current (Isc x 1.25)	204A (68A per MPPT)	
Number of DC Inputs	15 inputs, 5 per MPPT	
DC Disconnection Type	Load-rated DC switch	
DC Surge Protection	Type II MOV, 2800V_{DC}, 20kA I_{TH} (8/20..S)	
AC Output		
Rated AC Output Power @ PF>0.99 to ±0.91[1]	50kW	60kW
Max. AC Apparent Power (Selectable)	50/55kVA	60/66kVA
Rated Output Voltage	480Vac	
Output Voltage Range[2]	422 - 528Vac	
Grid Connection Type	3Ø / PE / N (Neutral optional)	
Max. AC Output Current @480Vac	60.2/66.2A	72.2/79.4A
Rated Output Frequency	60Hz	
Output Frequency Range[2]	57 - 63Hz	
Power Factor	>0.99 (±0.8 adjustable)	
Current THD @ Rated Load	<3%	
Max. Fault Current Contribution (1 Cycle RMS)	64.1A (1.06/0.88 PU)	
Max. OCPD Rating	110A	125A
AC Disconnection Type	Load-break rated AC switch	
AC Surge Protection	Type II MOV, 1240V_{DC}, 15kA I_{TH} (8/20..S)	
System and Performance		
Topology	Transformerless	
Max. Efficiency	98.8%	
CEC Efficiency	98.5%	
Stand-by / Night Consumption	<1W	
Environment		
Enclosure Protection Degree	NEMA Type 4X	
Cooling Method	Variable speed cooling fans	
Operating Temperature Range[3]	-22°F to +140°F / - 30°C to +60°C	
Non-Operating Temperature Range[4]	No low temp minimum to +158°F / +70°C maximum	
Operating Humidity	0 to 100%	
Operating Altitude	13,123.4ft / 4000m (derating from 9842.5ft / 3000m)	
Audible Noise	<60dBA @ 1m and 25°C	
Display and Communication		
User Interface and Display	LCD+LED	
Inverter Monitoring	SunSpec, Modbus RS485	
Site Level Monitoring	CPS FlexOM Gateway (1 per 32 inverters)	
Modbus Data Mapping	CPS	
Remote Diagnostics / FW Upgrade Functions	Standard / (with FlexOM Gateway)	
Mechanical		
Dimensions (HxWxD)	39.4 x 23.6 x 10.24in. (1000 x 600 x 260mm)	
Weight	Inverter: 123.5lbs/56kg; Wire-box: 33lbs/15kg	
Mounting / Installation Angle[5]	15 to 90 degrees from horizontal (vertical or angled)	
AC Termination	M8 Stud Type Terminal Block (Wire range: #6 - 3/0AWG CU/AL , Lugs not supplied)	
DC Termination[6]	Screw Clamp, Neg. Busbar (RSD version[8]) Wire range: #14 - #6AWG CU	
Fused String Inputs (5 per MPPT)[7]	RSD[8] and Standard Wire-box: 20A fuses provided (Fuse values up to 30A acceptable)	
Safety		
Certifications and Standards	UL1741-SA Ed. 2, UL1699B, CSA-C22.2 NO.107.1-01, IEEE1547a-2014; FCC PART15	
Selectable Grid Standard	IEEE 1547a-2014, CA Rule 21, ISO-NE	
Smart-Grid Features	Volt-RideThru, Freq-RideThru, Ramp-Rate, Specified-PF, Volt-VAr, Freq-Watt, Volt-Watt	
Warranty		
Standard	10 years	
Extended Terms	15 and 20 years	

1) Active Power Derating begins; at PF=±0.91 to ±0.8 when Max AC Apparent Power is set to 55 or 66kVA.
2) The "Output Voltage Range" and "Output Frequency Range" may differ according to the specific grid standard.
3) Active Power Derating begins; at 40°C when PF=±0.8 and MPPT Vr/min, at 45°C when PF=1 and MPPT Vr/min, and at 50°C when PF=1 and MPPT V ≥ 700Vdc.
4) See user manual for further requirements regarding non-operating conditions.
5) Shade Cover accessory required for installation angles of 75 degrees or less.
6) RSD wire-box only includes fuses/fuseholders on the positive polarity, compliant with NEC 2017, 690.9 (C).
7) Fuse values above 20A have additional spacing requirements or require the use of the Y-Comb Terminal Block. See user manual for details.

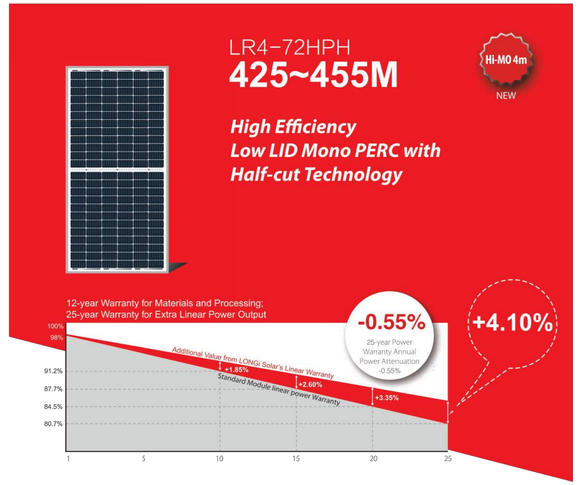

Complete System and Product Certifications

IEC 61215, IEC 61730, UL 61730

ISO 9001:2008: ISO Quality Management System

ISO 14001: 2004: ISO Environment Management System

TS62941: Guideline for module design qualification and type approval

OHSAS 18001: 2007 Occupational Health and Safety

* Specifications subject to technical changes and tests.
LONGi Solar reserves the right of interpretation.

Positive power tolerance (0 ~ +5W) guaranteed

High module conversion efficiency (up to 20.9%)

Slower power degradation enabled by Low LID Mono PERC technology: first year <2%, 0.55% year 2-25

Solid PID resistance ensured by solar cell process optimization and careful module BOM selection

Reduced resistive loss with lower operating current

Higher energy yield with lower operating temperature

Reduced hot spot risk with optimized electrical design and lower operating current

LONGi

Room 801, Tower 3, Lujiazui Financial Plaza, No.826 Century Avenue, Pudong Shanghai, 200120, China
Tel: +86-21-80162606 E-mail: module@longi-silicon.com Facebook: www.facebook.com/LONGi Solar

Note: Due to continuous technical innovation, R&D and improvement, technical data above mentioned may be of modification accordingly. LONGi have the sole right to make such modification at anytime without further notice; Demanding party shall request for the latest datasheet for such as contract need, and make it a consisting and binding part of lawful documentation duly signed by both parties.

20200410V11 for US-D

LR4-72HPH 425~455M

Design (mm)

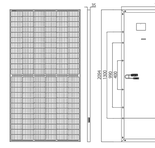

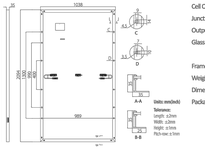

Mechanical Parameters

Cell Orientation: 144 (6×24)
Junction Box: IP68, three diodes
Output Cable: 4mm², 1400mm in length
Glass: Single glass
3.2mm coated tempered glass
Frame: Anodized aluminum alloy frame
Weight: 23.5kg
Dimension: 2094×1038×35mm
Packaging: 30pcs per pallet
150pcs per 20'GP
660pcs per 40'HC

Operating Parameters

Operational Temperature: -40°C ~ +85°C
Power Output Tolerance: 0 ~ +5 W
Voc and Isc Tolerance: ±3%
Maximum System Voltage: DC1500V (IEC/UL)
Maximum Series Fuse Rating: 20A
Nominal Operating Cell Temperature: 45±2°C
Safety Class: Class II
Fire Rating: UL type 1 or 2

Electrical Characteristics

Test uncertainty for Pmax: ±3%

Model Number	LR4-72HPH-425M		LR4-72HPH-430M		LR4-72HPH-435M		LR4-72HPH-440M		LR4-72HPH-445M		LR4-72HPH-450M		LR4-72HPH-455M	
Testing Condition	STC	NOCT	STC	NOCT	STC	NOCT	STC	NOCT	STC	NOCT	STC	NOCT	STC	NOCT
Maximum Power (Pmax/W)	425	317.4	430	321.1	435	324.9	440	328.6	445	332.3	450	336.1	455	339.8
Open Circuit Voltage (Voc/V)	48.3	45.3	48.5	45.5	48.7	45.7	48.9	45.8	49.1	46.0	49.3	46.2	49.5	46.4
Short Circuit Current (Isc/A)	11.23	9.08	11.31	9.15	11.39	9.21	11.46	9.27	11.53	9.33	11.60	9.38	11.66	9.43
Voltage at Maximum Power (Vmp/V)	40.5	37.7	40.7	37.8	40.9	38.1	41.1	38.3	41.3	38.5	41.5	38.6	41.7	38.8
Current at Maximum Power (Imp/A)	10.50	8.42	10.57	8.47	10.64	8.53	10.71	8.59	10.78	8.65	10.85	8.70	10.92	8.75
Module Efficiency(%)	19.4		19.8		20.0		20.2		20.5		20.7		20.9	

STC (Standard Testing Conditions): Irradiance 1000W/m², Cell Temperature 25°C, Spectra at AM1.5

NOCT (Nominal Operating Cell Temperature): Irradiance 800W/m², Ambient Temperature 20°C , Spectra at AM1.5, Wind at 1m/S

Temperature Ratings (STC)

Temperature Coefficient of Isc	+0.048%/°C
Temperature Coefficient of Voc	-0.270%/°C
Temperature Coefficient of Pmax	-0.350%/°C

Mechanical Loading

Front Side Maximum Static Loading	5400Pa
Rear Side Maximum Static Loading	2400Pa
Hailstone Test	25mm Hailstone at the speed of 23m/s

I-V Curve

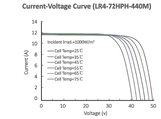

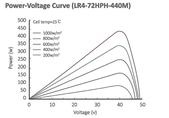

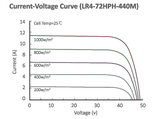

LONGi

Room 801, Tower 3, Lujiazui Financial Plaza, No.826 Century Avenue, Pudong Shanghai, 200120, China
Tel: +86-21-80162606 E-mail: module@longi-silicon.com Facebook: www.facebook.com/LONGi Solar

Note: Due to continuous technical innovation, R&D and improvement, technical data above mentioned may be of modification accordingly. LONGi have the sole right to make such modification at anytime without further notice; Demanding party shall request for the latest datasheet for such as contract need, and make it a consisting and binding part of lawful documentation duly signed by both parties.

20200410V11 for US-D

SYSTEM HOST

COUNTY OF SAN MATEO CALIFORNIA

800 North Humboldt Street
San Mateo, CA 94401

SYSTEM DEVELOPER

FOREFRONT POWER

100 Montgomery Street, Suite 725
San Francisco, CA 94104

GENERAL CONTRACTOR

COLLINS ELECTRICAL COMPANY INC.

1902 Channel Drive
West Sacramento, CA 95691
916-567-1100

ELECTRICAL ENGINEER

HARDIN-DAVIDSON ENGINEERING

HARDIN-DAVIDSON
356 Pollasky Avenue, Ste. 200
Clovis, CA 93612
559.323.4995

STRUCTURAL ENGINEERING AND STEEL CONSTRUCT

TEICHERT SOLAR

10620 Treena Street, Suite 140,
San Diego, CA 92131

ARCHITECT OF RECORD

M M P V d e s i g n

Mariana Moncada, Architect
718 West Arbor Drive
San Diego, CA 92103
619.632.2883

ARCHITECT / ENGINEER OF RECORD

REGISTERED PROFESSIONAL ENGINEER R.J.HARDIN NO. 9125 ELECTRICAL STATE OF CALIFORNIA

PROJECT:

SAN MATEO COUNTY MEDICAL CENTER

222 W 39TH AVENUE
SAN MATEO, CA 94403

NO.	REVISION	DATE

DATE:

07.21.23

SHEET TITLE:

ELECTRICAL SOLAR EQUIPMENT CUT SHEETS

SHEET NO.:

E6.0

Power Optimizer

For North America

S440 / S500B / S650B



POWER OPTIMIZER

PV power optimization at the module level

- Specifically designed to work with SolarEdge residential inverters
- Detects abnormal PV connector behavior, preventing potential safety issues
- Module-level voltage shutdown for installer and firefighter safety
- Superior efficiency (99.5%)
- Mitigates all types of module mismatch loss, from manufacturing tolerance to partial shading
- Faster installations with simplified cable management and easy assembly using a single bolt
- Flexible system design for maximum space utilization
- Compatible with bifacial PV modules
- Meets NEC requirements for arc fault protection (AFCI) and Photovoltaic Rapid Shutdown System (PVRSS)

solaredge.com

solaredge

Three Phase Inverters for the 277/480V Grid

For North America

SE30KUS / SE40KUS



INVERTERS

The best choice for SolarEdge enabled systems

- Specifically designed to work with power optimizers
- Quick and easy inverter commissioning directly from a smartphone using the SolarEdge SetApp
- Fixed voltage inverter for superior efficiency (98.5%) and longer strings
- Built-in type 2 DC and AC Surge Protection, to better withstand lightning events
- Small, lightest in its class, and easy to install outdoors or indoors on provided bracket
- Integrated arc fault protection and rapid shutdown for NEC 2014 and 2017, per article 690.11 and 690.12
- Built-in module-level monitoring with Ethernet, wireless or cellular communication for full system visibility
- Integrated Safety Switch
- UL1741 SA certified, for CPUC Rule 21 grid compliance

solaredge.com

solaredge

Power Optimizer

For North America

S440 / S500B / S650B

	S440	S500B	S650B	
INPUT				
Rated Input DC Power(1)	440	500	650	W
Absolute Maximum Input Voltage (Voc)	60	125	85	Vdc
MPPT Operating Range	8 – 60	12.5 – 105	12.5 – 85	Vdc
Maximum Short Circuit Current (Isc) of Connected PV Module	14.5	15		Adc
Maximum Efficiency	99.5			%
Weighted Efficiency	98.6			%
Overvoltage Category	II			
OUTPUT DURING OPERATION (POWER OPTIMIZER CONNECTED TO OPERATING SOLAREDGE INVERTER)				
Maximum Output Current	15			Adc
Maximum Output Voltage	60	80		Vdc
OUTPUT DURING STANDBY (POWER OPTIMIZER DISCONNECTED FROM SOLAREDGE INVERTER OR INVERTER OFF)				
Safety Output Voltage per Power Optimizer	1 ± 0.1			Vdc
STANDARD COMPLIANCE				
Photovoltaic Rapid Shutdown System	NEC 2014, 2017 & 2020			
EMC	FCC Part 15 Class B, IEC61000-6-2, IEC61000-6-3			
Safety	IEC62109-1 (class II safety), UL1741			
Material	UL94 V-0, UV Resistant			
RoHS	Yes			
Fire Safety	VDE-AR-E 2100-712:2013-05			
INSTALLATION SPECIFICATIONS				
Maximum Allowed System Voltage	1000			Vdc
Dimensions (W x L x H)	129 x 155 x 30 / 5.07 x 6.10 x 1.18	129 x 165 x 45 / 5.07 x 6.49 x 1.77		mm / in
Weight	720 / 1.6	790 / 1.74		gr / lb
Input Connector	MC4(2)			
Input Wire Length	0.1 / 0.32			m / ft
Output Connector	MC4			
Output Wire Length	(+) 2.3, (-) 0.10 / (+) 7.54, (-) 0.32			m / ft
Operating Temperature Range(3)	-40 to +85			°C
Protection Rating	IP68 / NEMA6P			
Relative Humidity	0 – 100			%

(1) Rated power of the module at STC will not exceed the power optimizer Rated Input DC Power. Modules with up to +5% power tolerance are allowed.
(2) For other connector types please contact SolarEdge.
(3) Power de-rating is applied for ambient temperatures above +85°C / +185°F for S440, and for ambient temperatures above +75°C / +167°F for S500B. Refer to the Power Optimizers Temperature De-Rating Technical Note for more details.

PV System Design Using a SolarEdge Inverter		SolarEdge Home Wave/Hub - Single Phase	Three Phase for 208V Grid	Three Phase for277/480V Grid	
Minimum String Length (Power Optimizers)	S440	8	10	18	
	S500B, S650B	6	8	14	
Maximum String Length (Power Optimizers)		25		50(4)	
Maximum Nominal Power per String		5700 (6000 with SE7600-US-SE11400-U)	6000	12750	W
Maximum Allowed Connected Power per String(5) (Permitted only when the difference in connected power between strings is 1,000W or less)		Refer to footnote 5	One string 7200 Two strings or more 7800	15000	W
Parallel Strings of Different Lengths or Orientations		Yes			

(4) A string with more than 30 optimizers does not meet NEC rapid shutdown requirements; safety voltage will be above the 30V requirement.
(5) If the inverters rated AC power is maximum nominal power per string, then the maximum power per string will be able to reach up to the inverters maximum input DC power. Refer to the String Design Guidelines Application Note for more details.
(6) It is not allowed to mix S-series and P-series Power Optimizers in new installations.

S440 (Flat Bracket)	S500B, S650B (Bent Bracket)
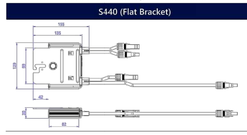	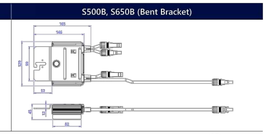

© SolarEdge Technologies, Ltd. All rights reserved. SOLAREDGE, the SolarEdge logo, OPTIMIZED BY SOLAREDGE are trademarks or registered trademarks of SolarEdge Technologies, Inc. All other trademarks mentioned herein are trademarks of their respective owners. Date: March 1, 2021 DS-000018-NA. Subject to change without notice.

RoHS

Intertek

Three Phase Inverters for the 277/480V Grid(1)

For North America

SE30KUS / SE40KUS

MODEL NUMBER	SE30KUS	SE40KUS	UNITS
APPLICABLE TO INVERTERS WITH PART NUMBER	SExxK-USx8IXXXX		
OUTPUT			
Rated AC Power Output	30000	40000	W
Maximum apparent AC output power	30000	40000	VA
AC Output Line Connections	3W + PE, 4W + PE		
AC Output Voltage Minimum-Nominal-Maximum(2) (L-N)	244 - 277 - 305		Vac
AC Output Voltage Minimum-Nominal-Maximum(2) (L-L)	422.5 - 480 - 529		Vac
AC Frequency Min-Nom-Max(2)	59.3 - 60 - 60.5		Hz
Maximum Continuous Output Current (per Phase)	36.25	48.25	Aac
GFDI Threshold	1		A
Utility Monitoring, Islanding Protection, Country Configurable Set Points	Yes		
Total Harmonic Distortion	≤ 3		%
Power Factor Range	+/- 0.85 to 1		
INPUT			
Maximum DC Power (Module STC)	45000	60000	W
Transformer-less, Ungrounded	Yes		
Maximum Input Voltage DC + to DC-	1000		Vdc
Operating Voltage Range	840 - 1000		Vdc
Maximum Input Current	36.25	48.25	Adc
Maximum Input Short Circuit Current	55		Adc
Reverse-Polarity Protection	Yes		
Ground-Fault Isolation Detection	167kΩ Sensitivity(3)		
CEC Weighted Efficiency	98.5		%
Night-time Power Consumption	<4		W
ADDITIONAL FEATURES			
Supported Communication Interfaces	2 x RS485, Ethernet, Cellular (optional)		
Inverter Commissioning	With the SetApp mobile application using built-in access point for local connection		
Arc Fault Protection	Integrated, User Configurable (According to UL1699B)		
Rapid Shutdown	NEC2014, NEC2017 and NEC2020 compliant/certified		
RS485 Surge Protection Plug-in	Supplied with the inverter, Built-in		
DC Surge Protection	Type II, field replaceable, Built-in		
AC Surge Protection	Type II, field replaceable, Built-in		
DC Fuses (Single Pole)	25A, Built-in		
Smart Energy Management	Export Limitation		
DC SAFETY SWITCH			
DC Disconnect	Integrated		
STANDARD COMPLIANCE			
Safety	UL1741, UL1741 SA, UL16998, CSA C22.2, Canadian AFCI according to T.I.L. M-07		
Grid Connection Standards	IEEE1547, Rule 21, Rule 14 (HI)		
Emissions	FCC Part 15 class A		
INSTALLATION SPECIFICATIONS			
AC output conduit size / AWG range	¾" or 1" / 6 - 10 AWG		
DC input conduit size / AWG range	¾" or 1" / 6 - 12 AWG		
Number of DC inputs pairs	4		
Dimensions with Safety Switch (H x W x D)	31.8 x 12.5 x 11.8 / 808 x 317 x 300		in / mm
Weight with Safety Switch	78.2 / 35.5		lb / kg
Cooling	Fans (user replaceable)		
Noise	< 62		dBA
Operating Temperature Range	-40 to +140 / -40 to +60(4)		°F / °C
Protection Rating	NEMA 3R		
Mounting	Bracket provided		

(1) For 120/208V inverters refer to: https://www.solaredge.com/sites/default/files/se-three-phase-us-inverter-208V-setapp-datasheet.pdf.
(2) For other regional settings please contact SolarEdge support.
(3) Where permitted by local regulations.
(4) For power de-rating information refer to: https://www.solaredge.com/sites/default/files/se-temperature-derating-note-na.pdf.

© SolarEdge Technologies, Inc. All rights reserved. SOLAREDGE, the SolarEdge logo, OPTIMIZED BY SOLAREDGE are trademarks or registered trademarks of SolarEdge Technologies, Inc. All other trademarks mentioned herein are trademarks of their respective owners. Date: May 11, 2022 DS-000070-NA. Subject to change without notice.

CE

SYSTEM HOST

800 North Humboldt Street
San Mateo, CA 94401

SYSTEM DEVELOPER

FOREFRONT POWER

100 Montgomery Street, Suite 725
San Francisco, CA 94104

GENERAL CONTRACTOR

COLLINS ELECTRICAL COMPANY INC.

1902 Channel Drive
West Sacramento, CA 95691
916-567-1100

ELECTRICAL ENGINEER

HARDIN-DAVIDSON ENGINEERING

HARDIN-DAVIDSON
356 Pollasky Avenue, Ste. 200
Clovis, CA 93612
559.323.4995

STRUCTURAL ENGINEERING AND STEEL CONSTRUCT

TEICHERT SOLAR

10620 Treena Street, Suite 140,
San Diego, CA 92131

ARCHITECT OF RECORD

M M P V d e s i g n

Mariana Moncada, Architect
718 West Arbor Drive
San Diego, CA 92103
619.632.2883

ARCHITECT / ENGINEER OF RECORD

REGISTERED PROFESSIONAL ENGINEER
R. J. HARDIN
NO. 9125
ELECTRICAL
STATE OF CALIFORNIA

PROJECT:

SAN MATEO COUNTY MEDICAL CENTER

222 W 39TH AVENUE
SAN MATEO, CA 94403

NO.	REVISION	DATE

DATE: 07.21.23

SHEET TITLE:

ELECTRICAL SOLAR EQUIPMENT CUT SHEETS

SHEET NO.:

E6.1

Project Name:	Part Number:	Type: A

WTZ

NARROW LINEAR VAPOR TIGHT

ILP
407-478-3759
www.ilp-inc.com



FEATURES

- Robust & Durable Narrow Body Linear Vapor Tight
- Industry Leading Max Ambient up to 131F
  - Ambient Range -40°F to 131°F (Select Models)
- Extremely High Efficacy up to 156 lm/W
- 2ft, 4ft & 8ft Fixture Lengths
- Lumen Packages Ranging 2,000–24,000
- Surface, Pendant, Wall & Suspended Mounting Options
- Wireless Grouping Controls Options
- Multiple Lens Options
- Fiberglass Body Attributes:
  - F1 Weatherability Rating & 5VA Flame Rating
  - IP65, IP66 & IP67, NEMA4X, NSF, & 1500 PSI Hosedown
- 3000K–5000K CCT
- >80 Color Rendering Index (CRI)
- Calculated L70 >100,000 Hours
- 0-10V Dimmable Driver (100%–10%)
- 5 Year Warranty
- ETL Listed for Wet Location
- DesignLights Consortium® Premium Qualified Luminaire

SUITABLE APPLICATIONS

• Coolers & Freezers • Food & Beverage Preparation • Greenhouse • Pharmaceutical • Healthcare • Education • Industrial • Parking Garage

ORDERING GUIDE:

SERIES	LUMENS (select one)	DRIVER	CCT	LENS	AMBIENT TEMP [1]
☐ WTZ2 2ft Amazon	☐ 2L ☐ 3L ☐ 4L ☐ 6L	☐ U 120-277V	☐ 50	☐ RAFL Ribbed Acrylic Frosted (Std)	☐ BLANK Standard
			☐ 40	☐ SAFL Shallow Acrylic Frosted	☐ CT -40°F Cold Start
☐ WTZ4 4ft Amazon	☐ 3L ☐ 4L ☐ 5L ☐ 6L		☐ 35	☐ SACL Shallow Acrylic Clear	
	☐ 7L ☐ 8L ☐ 9L ☐ 10L		☐ 30	☐ SPFL Shallow Polycarbonate Frosted	
	☐ 12L			☐ SPCL Shallow Polycarbonate Clear	
☐ WTZ8 8ft Amazon	☐ 6L ☐ 8L ☐ 10L ☐ 12L				
	☐ 14L ☐ 16L ☐ 18L ☐ 24L				

OPTIONS		CONTROLS OPTIONS	
Factory Installed		**Basic**	
☐ SD347 [10]	347V Step Down Transformer	☐ WLOS [4,6]	Wet-Location Rated On/Off End Mounted Occupancy Sensor
☐ SD480 [10]	480V Step Down Transformer	☐ WLOSPC [4,6]	Wet-Location Rated On/Off End Mounted Occ Sensor w/ Photocell
☐ DIM1	1% Dimmming Driver	☐ USBD [4,6]	User Selectable Bi-Leveling Dimming End Mounted Sensor
☐ SS	Stainless Steel Latches	☐ BDxx [4,6]	Preset Bi-Level Dimming End Mounted Sensor
☐ TPS	Tamper Proof Screws	☐ BDxxPC [4,6]	Preset Bi-Level Dimming End Mounted Sensor w/ Photocell
☐ EM7 [7]	7W Factory Installed Battery Backup	☐ MWS [5,6,8,8]	On/Off Microwave Sensor Installed Behind Lens
☐ EM7/HE [7,15,15]	7W Factory Installed Battery Backup	☐ MWUSBD [5,6,6,8,8,15]	User Selectable Bi-Level Dimming Microwave Sensor Installed Behind Lens
☐ EM10 [7]	10W Factory Installed Battery Backup		
☐ EM10/HE [7,15,15]	10W Factory Installed Battery Backup		
☐ EM10/HE-SD [7,15,15]	10W Factory Installed Self-Diagnosing Battery Backup	**Advanced**	
☐ EM12 [7]	12W Factory Installed Battery Backup	☐ ES/HB [5,11]	EasySense High-Bay Sensor
☐ GTD [9]	Factory Installed Generator Transfer Device	☐ SS/HRW/IL [5,6]	Enlighted Ruggedized Individual Lighting (IL) Sensor w/ Control Unit
☐ LEDBBCT [9]	Factory Installed Cold Temp Battery Backup	☐ SS/HRW/CL [5,6]	Enlighted Ruggedized Connected Lighting (CL) Sensor w/ Control Unit
☐ SP10	10kA Surge Protector Installed	☐ SS/HRW/IOT [5,6]	Enlighted Ruggedized Internet of Things (IOT) Sensor w/ Control Unit
☐ CORDWx/xFT	Wet-location rated cord installed (xFT = Length)	☐ FSP-311B/L2 [5,6]	Legrand FSP-311 Bluetooth Programming sensor–8' mounting height
☐ CORD/6FT/5WIRE	6ft 5-wire cord w/ 1 ground, 2 power, and 2 dimming leads	☐ FSP-311B/L7 [5,6]	Legrand FSP-311 Bluetooth Programming sensor–20' mounting height
☐ 3WMR [4]	3-wire mini receptacle installed	☐ FSP-311B/L7 [5,6]	Legrand FSP-311 Bluetooth Programming sensor–40' mounting height
☐ 3WMR/6 [4]	3-wire mini receptacle installed with 6ft cord		
☐ EMH1 [13]	1/2" HUB installed in one end of housing for power entry		
☐ EMH2 [14]	1/2" HUB installed in both ends of housing for power entry		
Mounting Options		**Ship With Accessories**	
☐ HB-xxx-LOOP	Aircraft cables (xxx= inches)	☐ ES/PCD [3]	EasySense Pre-Programmed Control Device
☐ HUB 3/4 [14,17]	Conduit Hub 3/4" for Pendant Mounting	☐ ES/IR [3,3]	EasySense Commissioning IR Blaster
☐ FMB [14,17]	Fixture Mounting Box for Pendant Mounting	☐ ES/WWS/DR	EasySense Dual Rocker Wireless Wall Switch
☐ AB45DEG	45 Degree Stainless Steel Angled Mounting Bracket Set	☐ MW/RC [2]	Programming Tool for MWUSBD sensor

[1]Reference Ambient Temperature Range Table for more detail (pg. 4)
[2]One needed per project
[3]IP65 Rated
[4]IP66 Rated
[5]IP67 Rated
[6]Does not qualify for NSF Listed
[7]Operating temp down to 32°F
[8]Operating temp down to -4°F
[9]Must be used with ES/PCD
[10]CEC Title 20 Compliant
[11]Must be used w/ ES/PCD & ES/IR for commissioning
[12]Must be used with MW/RC option for commissioning
[13]Cannot be used with combination of End Mounted sensor & power cord
[14]Cannot be used w/ End Mounted sensor or power cord
[15]Must use with FMB for pendant mounting
[16]Must use with HUB 3/4 for pendant mounting
[17]One required per 4ft section
[18]Reference DLC website for current listing
[19]Not available on WTZ2

WTZSPEC0321

WTZ

NARROW LINEAR VAPOR TIGHT

AMBIENT TEMPERATURE RANGE

Part Numbers	Suspended (18 in.) Standard[1]	Surface Mount Standard[1]
WTZ2-2L-U-XX-RAFL	-4°F to 127°F	-4°F to 126°F
WTZ2-3L-U-XX-RAFL	-4°F to 122°F	-4°F to 112°F
WTZ2-4L-U-XX-RAFL	-4°F to 113°F	-4°F to 103°F
WTZ2-6L-U-XX-RAFL	-4°F to 110°F	-4°F to 96°F
WTZ4-3L-U-XX-RAFL	-4°F to 132°F	-4°F to 130°F
WTZ4-4L-U-XX-RAFL	-4°F to 129°F	-4°F to 122°F
WTZ4-5L-U-XX-RAFL	-4°F to 127°F	-4°F to 115°F
WTZ4-6L-U-XX-RAFL	-4°F to 126°F	-4°F to 113°F
WTZ4-7L-U-XX-RAFL	-4°F to 123°F	-4°F to 111°F
WTZ4-8L-U-XX-RAFL	-40°F to 124°F	-40°F to 108°F
WTZ4-9L-U-XX-RAFL	-4°F to 122°F	-4°F to 104°F
WTZ4-10L-U-XX-RAFL	-40°F to 130°F	-40°F to 119°F
WTZ4-12L-U-XX-RAFL	-40°F to 129°F	-40°F to 118°F
WTZ8-6L-U-XX-RAFL	-4°F to 122°F	-4°F to 117°F
WTZ8-8L-U-XX-RAFL	-40°F to 129°F	-40°F to 115°F
WTZ8-10L-U-XX-RAFL	-4°F to 127°F	-4°F to 115°F
WTZ8-12L-U-XX-RAFL	-40°F to 124°F	-40°F to 120°F
WTZ8-14L-U-XX-RAFL	-4°F to 125°F	-4°F to 111°F
WTZ8-16L-U-XX-RAFL	-40°F to 122°F	-40°F to 110°F
WTZ8-18L-U-XX-RAFL	-40°F to 145°F	-40°F to 133°F
WTZ8-24L-U-XX-RAFL	-40°F to 122°F	-40°F to 107°F

[1]CT Cold Temp Start Driver (-40°F) Available for (-4°F) standard products

SPECIFICATIONS

CONSTRUCTION
Injection molded one piece 5VA rated fiberglass body with chemical resistant finish for rigidity, durability and prolonged life in rough environments. F1 weatherability rated housing. Toolless removable gear tray for quick and easy electrical. Captive latches fastened to housing to safely secure lens to housing. Designed to achieve maximum performance and improved aesthetics.

ELECTRICAL
Class 2 LED light engine for high efficacy and long life. Calculated L70 > 100,000hrs. LED Lumen Maintenance Estimates based on TM-21 projections for the light source at 25C ambient. Power Factor > 0.90. Standard 120-277 Vac 0-10V dimmable (10% - 100%) with optional 347V - 480Vac step down transformer. Optional emergency battery backups and generator transfer device available to meet critical life safety lighting requirements. Fixture max ambient reduced for emergency battery backup and step down options.

INSTALLATION
Designed for a variety of mounting applications including surface, pendant, 45 degree wall mount and suspended. Pre-drilled holes on each side of fixture for electrical access and wiring. Hole plugged from factory with rubbed IP rated seal. 1/2" HUBs available for threaded power entry from both ends. Toolless hinged removable gear tray for quick and easy access to electrical.

WARRANTY
5 Year Warranty (Terms and Conditions apply)

OPTICS
Robust injection molded and impact resistant PMMA lens options for durability and LED glare reduction. Standard Ribbed Acrylic Frosted (RAFL), with optional Shallow Acrylic Frosted (SAFL), Shallow Acrylic Clear (SACL), Shallow Polycarbonate Frosted (SPFL) and Shallow Polycarbonate Clear (SPCL) lens options. Field removeable lens for easy access to LED boards, drivers and maintenance.

THERMAL
Ambient temperature range -40°F up to 131°F (-40°C to 55°C) on select models with cold start ambient temperature options. Fixture to be mounted at a minimum plenum height of 18" for suspended mounting. Reduced maximum ambient for surface mounting. Reference Ambient Temperature Ratings by lumen package in the Ambient Temperature Range table for more detail.

CONTROLS
Factory installed Advanced & Basic integral occupancy sensor options available. Fully control light levels for both occupied and unoccupied areas with user selectable bi-level dimming options to meet critical life safety lighting requirements. Advanced controls available for grouping capabilities and BAS operation. See controls pg for more detail (pg. 5).

CERTIFICATIONS
ETL Listed to US and Canadian safety standards. Suitable for Wet Locations. American Recovery and Reinvestment Act Funding Compliant. BAA Compliant. IP65, IP66, IP67 Rated. NSF Listed. 1500 PSI Hosedown Rated. DLC (DesignLights Consortium) Premium Qualified. Please refer to the DLC Qualified Products List at www.Designlights.org/QPL to confirm specific product qualifications.

WTZSPEC0321

WTZ

NARROW LINEAR VAPOR TIGHT

CONTROLS OPTIONS

BASIC

WLOS
Standard on/off wet location rated PIR occupancy sensor. Comes with 360 degree lens. Sensor mounted off end of fixture.

WLOSPC
Standard on/off wet location rated PIR occupancy sensor with photocell control. When installed, fixture will not activate unless 1. motion is detected and 2. light levels are below the preset level. When activated, fixture will turn on to 100% light output and will only shut off when one of the two levels listed above are met. If no motion is detected and light levels fall below preset level the fixture remains off. Sensor mounted off end of fixture.

USBD
User Selectable Bi-Level Dimming wet location rated PIR occupancy sensor. Allows the end user to manually select the unoccupied dimming level. Once motion is detected, the fixture will return to 100% light output. Sensor mounted off end of fixture.

BDxx
Factory set Bi-Level Dimming wet location rated PIR occupancy sensor. Sensor is set to dim level, as indicated in the "xx" portion of the part number, when the area is unoccupied. Example: BD20 sets the fixture to dim down to 20% lumen output when the area is unoccupied. Once motion is detected, the fixture will return to 100% light output. Sensor mounted off end of fixture.

BDxxPC
Factory set Bi-Level Dimming wet location rated PIR occupancy sensor with photocell. Sensor is set to dim level as indicated in the "xx" portion of the part number, when the area is unoccupied and will not return to 100% light output unless 1. motion is detected and 2. the light level is below the preset level. Example: BD20PC sets the fixture to dim down to 20% lumen output when the area is unoccupied and will not return to 100% light output unless the above conditions are met for both motion light level readings. Sensor mounted off end of fixture.

MWS
Standard on/off wet location rated microwave occupancy sensor. Sensor installed on LED gear tray behind lens.

MWUSBD
User Selectable Bi-Level Dimming wet location rated microwave occupancy sensor. Allows the end used to manually select the unoccupied dimming level. Once motion is detected, the fixture will return to 100% light output. Requires use of MW/RC programming tool; one needed per project. Sensor installed on LED gear tray behind lens.

ADVANCED

Philips ES/HB
EasySense wet location rated PIR occupancy sensor combines occupancy sensing, daylight harvesting and institutional tuning in one solution. Each device allows you to turn on/off occupancy and/or daylight harvesting functions as well as set the full light output, background light level, occupancy prolong time, occupancy grace fading time and occupancy time outhold time. Requires use of EasySense Pre-Programmed Control Device (ES/PCD) and Commissioning IR Blaster (ES/IR); one of each needed per project. Sensor mounted off end of fixture.

Legrand FSP-311B
FSP-311 wet location rated PIR occupancy sensor offers fully adjustable high and low dimmed light levels with optional photocell. Hold off setpoint with automatic calibration option. Adjustable time delay and cut off delay. Sensor adjustable programming via iOS or Android 'Sensor Configuration' App. Sensor mounted off end of fixture.

Enlighted SS/HRW/IL
Enlighted wet location rated PIR occupancy sensor bundled system with 5E sensor (SU-5S-HRW-IL), Control Unit (CU-4E-FM) and Cable (CBL-5E-CU4-30N). Fixtures are controlled based on occupancy and ambient light. Includes ability to group fixtures together and connect to a wireless wall switch to zone fixtures for group operation. Provided factory installed components only. Inquire for Enlighted system. Inquire with factory for customer supplied factory installed components. Contact factory for more information. Sensor mounted off end of fixture.

Enlighted SS/HRW/CL
Enlighted wet location rated PIR occupancy sensor bundled system with 5E sensor (SU-5S-HRW-CL), Control Unit (CU-4E-FM) and Cable (CBL-5E-CU4-30N). Fixtures are controlled based on occupancy and ambient light. Includes individual lighting attributes plus conection to Enlighted Energy Manager. The Energy Manager provides data analysis for all data collected by the Enlighted Smart Sensors for energy, occupancy and environment. Inquire for Enlighted system. Inquire with factory for customer supplied factory installed components. Contact factory for more information. Sensor mounted off end of fixture.

Enlighted SS/HRW/IOT
Enlighted wet location rated PIR occupancy sensor bundled system with 5E sensor (SU-5S-HRW-IOT), Control Unit (CU-4E-FM) and Cable (CBL-5E-CU4-30N). Fixtures are controlled based on occupancy and ambient light, Includes individual lighting attributes plus conection to Enlighted Energy Manager. The Energy Manager provides data analysis for all data collected by the Enlighted Smart Sensors for energy, occupancy and environment. Additionally, the IOT functionality takes the data acess and function beyond just lighting to a wide range of applications beyond the standard connected lighting controls. Inquire for Enlighted system. Inquire with factory for customer supplied factory installed components. Contact factory for more information. Sensor mounted off end of fixture.

WTZSPEC0321

WTZ

NARROW LINEAR VAPOR TIGHT

MOUNTING OPTIONS

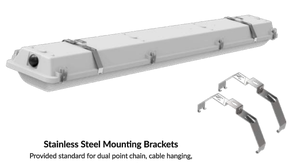

Stainless Steel Mounting Brackets
Provided standard for dual point chain, cable hanging, and surface mount.

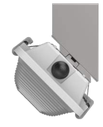

AB45DEG
45° Stainless Steel Angled Wall Mount Bracket. Two standard per set. One set required per fixture.



HB-XXX-LOOP
Includes 2 adjustable cable hangers. Available in 60", 120", 180" & 240"

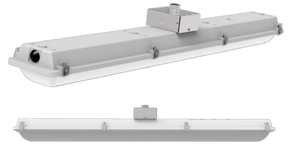

FMB
Fixture Mounting Box utilized when pendant mounting. Must be used with HUB 3/4. One needed per 4ft section.



HUB 3/4
HUB 3/4 - ¾" Conduit Hub for Single Pendant Mounting. Requires use of FMB

WTZSPEC0321

WTZ

NARROW LINEAR VAPOR TIGHT

LINE DRAWINGS

WTZ2:

Top View

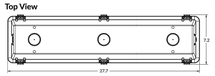

End View



LENS TYPE:
RAFL



LENS TYPE:
SAFL
SACL
SPFL
SPCL

Side View



WTZ4

Top View

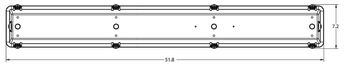

End View



LENS TYPE:
RAFL



LENS TYPE:
SAFL
SACL
SPFL
SPCL

Side View



WTZ8

Top View



Side View



End View



LENS TYPE:
RAFL



LENS TYPE:
SAFL
SACL
SPFL
SPCL

WTZSPEC0321

WTZ

NARROW LINEAR VAPOR TIGHT

PHOTOMETRIC DATA

LUMINAIRE DATA	
Part Number	WTZ2-4L-U-50-RAFL
Description	2ft Amazon Vapor Tight, 4,000 Lumens, Ribbed Frosted Acrylic Lens
Fixture Lumens (lm)	4,172 lm
Wattage (W)	80 W
Efficacy (lm/W)	164 lm/W
Mounting	Suspended
Spacing Criteria	0° = 1.30, 90° = 1.29

ZONAL LUMEN SUMMARY		
Zone	Lumens (lm)	% Fixture
0° - 40°	1,744	42%
0° - 60°	3,043	73%
0° - 90°	4,010	96%
90° - 180°	162	4%
0° - 180°	4,172	100%

CANDELA PLOT

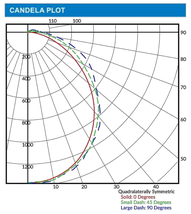

LUMINAIRE DATA	
Part Number	WTZ4-8L-U-50-RAFL
Description	4ft Amazon Vapor Tight, 8,000 Lumens, Ribbed Frosted Acrylic Lens
Fixture Lumens (lm)	8,673 lm
Wattage (W)	80 W
Efficacy (lm/W)	152 lm/W
Mounting	Suspended
Spacing Criteria	0° = 1.29, 90° = 0.77

ZONAL LUMEN SUMMARY		
Zone	Lumens (lm)	% Fixture
0° - 40°	3,626	42%
0° - 60°	6,327	73%
0° - 90°	8,338	96%
90° - 180°	336	4%
0° - 180°	8,673	100%

CANDELA PLOT

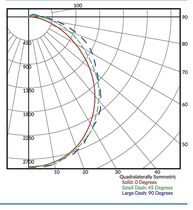

LUMINAIRE DATA	
Part Number	WTZ8-16L-U-50-RAFL
Description	8ft Amazon Vapor Tight, 16,000 Lumens, Ribbed Frosted Acrylic Lens
Fixture Lumens (lm)	16,371 lm
Wattage (W)	80 W
Efficacy (lm/W)	159 lm/W
Mounting	Suspended
Spacing Criteria	0° = 1.26, 90° = 1.26

ZONAL LUMEN SUMMARY		
Zone	Lumens (lm)	% Fixture
0° - 40°	6,845	42%
0° - 60°	11,944	73%
0° - 90°	15,737	96%
90° - 180°	634	4%
0° - 180°	16,371	100%

CANDELA PLOT

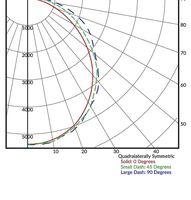

WTZSPEC0321

SYSTEM HOST

COUNTY OF SAN MATEO CALIFORNIA

800 North Humboldt Street
San Mateo, CA 94401

SYSTEM DEVELOPER

FOREFRONT POWER

100 Montgomery Street, Suite 725
San Francisco, CA 94104

GENERAL CONTRACTOR

COLLINS ELECTRICAL COMPANY INC.

1902 Channel Drive
West Sacramento, CA 95691
916-567-1100

ELECTRICAL ENGINEER

HARDIN-DAVIDSON ENGINEERING

HARDIN-DAVIDSON
356 Pollasky Avenue, Ste. 200
Clovis, CA 93612
559.323.4995

STRUCTURAL ENGINEERING AND STEEL CONSTRUCT

TEICHERT SOLAR

10620 Treena Street, Suite 140,
San Diego, CA 92131

ARCHITECT OF RECORD

MMPV design

Mariana Moncada, Architect
718 West Arbor Drive
San Diego, CA 92103
619.632.2883

ARCHITECT / ENGINEER OF RECORD

REGISTERED PROFESSIONAL ENGINEER
R. J. HARDIN
NO. 9125
ELECTRICAL
STATE OF CALIFORNIA

PROJECT:

SAN MATEO COUNTY MEDICAL CENTER

222 W 39TH AVENUE
SAN MATEO, CA 94403

NO.	REVISION	DATE

DATE: 07.21.23

SHEET TITLE:

LIGHTING FIXTURE CUT SHEETS

SHEET NO.:

E6.2

STATE OF CALIFORNIA
Outdoor Lighting
CALIFORNIA ENERGY COMMISSION

CERTIFICATE OF COMPLIANCE			NRCC-LTO-E
Project Name:	San Mateo County - Medical Center	Report Page:	(Page 1 of 7)
Project Address:	222 W 39th Avenue	Date Prepared:	6/9/2023

This document is used to demonstrate compliance with requirements in 110.9, 130.0, 130.2, 140.7, and 141.0(b)2L for outdoor lighting scopes using the prescriptive path for nonresidential and hotel/motel occupancies. It is also used to document compliance with requirements in 160.5, 170.2(e)6, 180.1(a) and 180.2(b)4Bv for outdoor lighting scopes using the prescriptive path for multifamily and mixed-use occupancies. Multifamily includes dormitory and senior living facilities.

A. GENERAL INFORMATION

01	Project Location (city)	San Mateo	04	Total Illuminated Hardscape Area (ft²)	26659
02	Climate Zone	3			
03	Outdoor Lighting Zone per Title 24 Part 1 10.114 or as designated by Authority Having Jurisdiction (AHJ):				
☐	LZ-0: Very Low - Undeveloped Parkland	☐ LZ-2: Moderate - Urban Clusters	☐ LZ-4: High - Must be reviewed by CA Energy Commission for Approval		
☐	LZ-1: Low - Rural Areas	☒ LZ-3: Moderately High - Urban Areas			
05	Occupancy Types within Project				
● All Other Occupancies					

B. PROJECT SCOPE

This table includes outdoor lighting systems that are within the scope of the permit application and are demonstrating compliance using the prescriptive path outlined in 140.7 / 170.2(e)6 or 141.0(b)2L / 180.2(b)4Bv for alterations.

My Project Consists of:

01	02	
☒ New Lighting System	Must Comply with Allowances from 140.7 / 170.2(e)6	
☐ Altered Lighting System	Is your alteration increasing the connected lighting load (Watts)?	○ Yes ○ No
03	04	05
% of Existing Luminaires Being Altered[1]	Sum Total of Luminaires Being Added or Altered	Calculation Method
☐ < 10% ☐ >= 10% and < 50% ☐ >= 50%		

Please proceed to Table F. Outdoor Lighting Fixture Schedule to define the project's luminaires.

[1] FOOTNOTES: % of Existing Luminaires Being Altered = (Sum Total of Luminaires Being Added or Altered / Existing Luminaires within the Scope of the Permit Application) x 100.

STATE OF CALIFORNIA
Outdoor Lighting
CALIFORNIA ENERGY COMMISSION

CERTIFICATE OF COMPLIANCE			NRCC-LTO-E
Project Name:	San Mateo County - Medical Center	Report Page:	(Page 2 of 7)
Project Address:	222 W 39th Avenue	Date Prepared:	6/9/2023

C. COMPLIANCE RESULTS

Results in this table are automatically calculated from data input and calculations in Tables F through N. Note: If any cell on this table says "COMPLIES with Exceptional Conditions" refer to Table D. Exceptional Conditions for guidance or see applicable Table referenced below.

Calculations of Total Allowed Lighting Power (Watts) 140.7 / 170.2(e)6 or 141.0(b)2L / 180.2(b)4Bv														Compliance Results		
01		02		03		04		05		06		07		08	09
General Hardscape Allowance 140.7(d)1 / 170.2(e)6 (See Table I)	+	Per Application 140.7(d)2 / 170.2(e)6 (See Table J)	+	Sales Frontage 140.7(d)2 (See Table K)	+	Ornamental 140.7(d)2 / 170.2(e)6 (See Table L)	+	Per Specific Area 140.7(d)2 / 170.2(e)6 (See Table M)	OR	Existing Power Allowance 141.0(b)2L / 180.2(b)4Bv (See Table N)	=	**Total Allowed** (Watts)	≥	**Total Actual** (Watts)	**07 must be >= 08**
810	+	---	+	---	+	---	+	---	OR	---	=	810	≥	609	COMPLIES
Shielding Compliance (See Table G for Details)															N/A
Controls Compliance (See Table H for Details)															COMPLIES

D. EXCEPTIONAL CONDITIONS

This table is auto-filled with uneditable comments because of selections made or data entered in tables throughout the form.

E. ADDITIONAL REMARKS

This table includes remarks made by the permit applicant to the Authority Having Jurisdiction.

Registration Number: | Generated Date/Time: | Documentation Software: EnergyPro
CA Building Energy Efficiency Standards - 2022 Nonresidential Compliance | Report Version: 2022.0.000 Schema Version: rev 20220101 | Compliance ID: EnergyPro-7514-0623-0142 Report Generated: 2023-06-09 11:08:16

STATE OF CALIFORNIA
Outdoor Lighting
CALIFORNIA ENERGY COMMISSION

CERTIFICATE OF COMPLIANCE			NRCC-LTO-E
Project Name:	San Mateo County - Medical Center	Report Page:	(Page 3 of 7)
Project Address:	222 W 39th Avenue	Date Prepared:	6/9/2023

F. OUTDOOR LIGHTING FIXTURE SCHEDULE

For new or altered lighting systems demonstrating compliance with 140.7 / 170.2(e)6 all new luminaires being installed and any existing luminaires remaining or being moved within the spaces covered by the permit application are included in the Table below. For altered lighting systems using the Existing Power method per 141.0(b)2L only new luminaires being installed and replacement luminaires being installed as part of the project scope are included (ie, existing luminaires remaining or existing luminaires being moved are not included). Outdoor lighting attached to multifamily buildings and controlled from the inside of a dwelling unit are included in Table H. and are not included here. All other multifamily outdoor lighting is included here.

Designed Wattage:

01	02		03	04	05	06	07	08	09	10	
Name or Item Tag	Complete Luminaire Description		Watts per luminaire[1, 2]	How is Wattage determined	Total Number Luminaires[2]	Luminaire Status[3]	Excluded per 140.7(a) / 170.2(e)6A	Design Watts	Cutoff Req. > 6,200 initial lumen output 130.2(b) / 160.5(c)[4]	Field Inspector	
										Pass	Fail
A	29W LED	☐ Linear	29	Mfr. Spec	21	New	☐	609	NA: < 6200 lumens	☐	☐
							Total Design Watts:	609			

* NOTES: Selections with a * require a note in the space below explaining how compliance is achieved.
EX: Luminaire is lighting a statue; EXCEPTION 2 to 130.2(b)

[1] FOOTNOTES: Authority Having Jurisdiction may ask for Luminaire cut sheets to confirm wattage used for compliance per 130.0(c) / 160.5(b)
[2] For linear luminaires, wattage should be indicated as W/lf instead of Watts/luminaire. Total linear feet should be indicated in column O5 instead of number of luminaires.
[3] Select "New" for new luminaires in a new outdoor lighting project, or for added luminaires in an alteration. Select "Altered" for replacement luminaires in an alteration. Select "Existing to Remain" for existing luminaires within the project scope that are not being altered and are remaining. Select "Existing Reinstalled" for existing luminaires which are being removed and reinstalled as part of the project scope.
[4] Compliance with mandatory shielding requirements is required for luminaires with initial lumen output >= 6,200 unless exempted by 130.2(b)/ 160.5(c)

G. SHIELDING REQUIREMENTS (BUG)

This section does not apply to this project.

Registration Number: | Generated Date/Time: | Documentation Software: EnergyPro
CA Building Energy Efficiency Standards - 2022 Nonresidential Compliance | Report Version: 2022.0.000 Schema Version: rev 20220101 | Compliance ID: EnergyPro-7514-0623-0142 Report Generated: 2023-06-09 11:08:16

STATE OF CALIFORNIA
Outdoor Lighting
CALIFORNIA ENERGY COMMISSION

CERTIFICATE OF COMPLIANCE			NRCC-LTO-E
Project Name:	San Mateo County - Medical Center	Report Page:	(Page 4 of 7)
Project Address:	222 W 39th Avenue	Date Prepared:	6/9/2023

H. OUTDOOR LIGHTING CONTROLS

This table demonstrates compliance with controls requirements for all new or altered luminaires installed as part of the permit application. For alteration projects, luminaires which are existing to remain (ie untouched) and luminaires which are removed and reinstalled (wiring only) do not need to be included in this table even if they are within the spaces covered by the permit application.
Outdoor lighting for nonresidential buildings, parking garages and common service areas in multifamily buildings must be documented separately from outdoor lighting attached to multifamily buildings and controlled from the inside of a dwelling unit

Mandatory Controls for Nonresidential Occupancies, Parking Garages & Common Areas in Multifamily Buildings

01	02	03	04	05	
Area Description	Shut-Off 130.2(c)1 / 160.5(c)	Auto-Schedule 130.2(c)2 / 160.5(c)	Motion Sensor 130.2(c)3 / 160.5(c)	Field Inspector	
				Pass	Fail
Exterior Lights	Astronomical Timer	Provided	Provided	☐	☐

[1] FOOTNOTE: Text has been abbreviated, please refer to Table 160.5-A to confirm compliance with the specific light source technologies listed.
[2] Authority having Jurisdiction may ask for cutsheets or other documentation to confirm compliance of light source.
[3] Recessed luminaires marked for use in fire-rated installations, and recessed luminaires installed in non-insulated ceilings are excepted from ii and iii.

Registration Number: | Generated Date/Time: | Documentation Software: EnergyPro
CA Building Energy Efficiency Standards - 2022 Nonresidential Compliance | Report Version: 2022.0.000 Schema Version: rev 20220101 | Compliance ID: EnergyPro-7514-0623-0142 Report Generated: 2023-06-09 11:08:16

STATE OF CALIFORNIA
Outdoor Lighting
CALIFORNIA ENERGY COMMISSION

CERTIFICATE OF COMPLIANCE			NRCC-LTO-E
Project Name:	San Mateo County - Medical Center	Report Page:	(Page 5 of 7)
Project Address:	222 W 39th Avenue	Date Prepared:	6/9/2023

I. LIGHTING POWER ALLOWANCE (per 140.7 / 170.2(e))

This table includes areas using allowance calculations per 140.7 / 170.2(e). General Hardscape Allowance is per Table 140.7-A/Table 170.2-R while "Use it or lose it" Allowances are per Table 140.7-B /Table 170.2-S. Indicate which allowances are being used to expand sections for user input. Luminaires that qualify for one of the "Use it or lose it" allowances shall not qualify for another "Use it or lose it" allowance.
Outdoor lighting attached to multifamily buildings and controlled from the inside of a dwelling unit are included in Table H. and are not included here. All other multifamily outdoor lighting is included here.

01					
☒ General Hardscape Allowance Table I (below)	"Use it or lose it" Allowance (select all that apply) (select all that apply)				
	☐ Per Application Table J	☐ Sales Frontage Table K	☐ Ornamental Table L	☐ Per Specific Area Table M	

Calculated General Hardscape Lighting Power Allowance per Table 140.7-A for Nonresidential & Hotel/Motel

02	03	04	05	06	07	08	09
Area Description	Area Wattage Allowance (AWA)			Linear Wattage Allowance (LWA)			Total General AWA + LWA (Watts)
	Illuminated Area (ft²)	Allowed Density (W/ft²)	Area Allowance (Watts)	Perimeter Length (lf)	Allowed Density (W/lf)	Linear Allowance (Watts)	
Solar Canopies	26659	0.021	559.8	0	0.2	0	560
Initial Wattage Allowance for Entire Site (Watts):							250
Instances of Initial Wattage Allowance (LZ 0 only)[1]							
Total General Hardscape Allowance (Watts):							810

J. LIGHTING ALLOWANCE: PER APPLICATION

This section does not apply to this project.

K. LIGHTING ALLOWANCE: SALES FRONTAGE

This section does not apply to this project.

L. LIGHTING ALLOWANCE: ORNAMENTAL

This section does not apply to this project.

Registration Number: | Generated Date/Time: | Documentation Software: EnergyPro
CA Building Energy Efficiency Standards - 2022 Nonresidential Compliance | Report Version: 2022.0.000 Schema Version: rev 20220101 | Compliance ID: EnergyPro-7514-0623-0142 Report Generated: 2023-06-09 11:08:16

STATE OF CALIFORNIA
Outdoor Lighting
CALIFORNIA ENERGY COMMISSION

CERTIFICATE OF COMPLIANCE			NRCC-LTO-E
Project Name:	San Mateo County - Medical Center	Report Page:	(Page 6 of 7)
Project Address:	222 W 39th Avenue	Date Prepared:	6/9/2023

M. LIGHTING ALLOWANCE: PER SPECIFIC AREA

This section does not apply to this project.

N. EXISTING CONDITIONS POWER ALLOWANCE (alterations only)

This section does not apply to this project.

O. DECLARATION OF REQUIRED CERTIFICATES OF INSTALLATION

Form/Title
NRCI-LTO-E - Must be submitted for all buildings

P. DECLARATION OF REQUIRED CERTIFICATES OF ACCEPTANCE

Form/Title	Systems/Spaces To Be Field Verified
NRCA-LTO-02-A - Must be submitted for all outdoor lighting controls except for alterations where controls are added to <= 20 luminaires.	Exterior Lights;

Registration Number: | Generated Date/Time: | Documentation Software: EnergyPro
CA Building Energy Efficiency Standards - 2022 Nonresidential Compliance | Report Version: 2022.0.000 Schema Version: rev 20220101 | Compliance ID: EnergyPro-7514-0623-0142 Report Generated: 2023-06-09 11:08:16

STATE OF CALIFORNIA
Outdoor Lighting
CALIFORNIA ENERGY COMMISSION

CERTIFICATE OF COMPLIANCE			NRCC-LTO-E
Project Name:	San Mateo County - Medical Center	Report Page:	(Page 7 of 7)
Project Address:	222 W 39th Avenue	Date Prepared:	6/9/2023

DOCUMENTATION AUTHOR'S DECLARATION STATEMENT

I certify that this Certificate of Compliance documentation is accurate and complete.

Documentation Author Name: Richard J. Hardin	Documentation Author Signature:
Company: Hardin-Davidson Engineering	Signature Date: 2023-06-09
Address: 356 Pollasky Ave	CEA/ HERS Certification Identification (if applicable): E-9125
City/State/Zip: Clovis CA 93612	Phone: 559.323.4995

RESPONSIBLE PERSON'S DECLARATION STATEMENT

I certify the following under penalty of perjury, under the laws of the State of California:

1. The information provided on this Certificate of Compliance is true and correct.
2. I am eligible under Division 3 of the Business and Professions Code to accept responsibility for the building design or system design identified on this Certificate of Compliance (responsible designer)
3. The energy features and performance specifications, materials, components, and manufactured devices for the building design or system design identified on this Certificate of Compliance conform to the requirements of Title 24, Part 1 and Part 6 of the California Code of Regulations.
4. The building design features or system design features identified on this Certificate of Compliance are consistent with the information provided on other applicable compliance documents, worksheets, calculations, plans and specifications submitted to the enforcement agency for approval with this building permit application.
5. I will ensure that a completed signed copy of this Certificate of Compliance shall be made available with the building permit(s) issued for the building, and made available to the enforcement agency for all applicable inspections. I understand that a completed signed copy of this Certificate of Compliance is required to be included with the documentation the builder provides to the building owner at occupancy.

Responsible Designer Name: Richard J. Hardin	Responsible Designer Signature:
Company: Hardin Davidson Engineering	Date Signed: 2023-06-09
Address: 356 Pollasky Ave, Suite 200	License: E9125
City/State/Zip: Clovis CA 93612	Phone: 559.323.4995

Registration Number: | Generated Date/Time: | Documentation Software: EnergyPro
CA Building Energy Efficiency Standards - 2022 Nonresidential Compliance | Report Version: 2022.0.000 Schema Version: rev 20220101 | Compliance ID: EnergyPro-7514-0623-0142 Report Generated: 2023-06-09 11:08:16

SYSTEM HOST
800 North Humboldt Street
San Mateo, CA 94401

SYSTEM DEVELOPER
FOREFRONT POWER
100 Montgomery Street, Suite 725
San Francisco, CA 94104

GENERAL CONTRACTOR
COLLINS ELECTRICAL COMPANY INC.
1902 Channel Drive
West Sacramento, CA 95691
916-567-1100

ELECTRICAL ENGINEER
HARDIN-DAVIDSON ENGINEERING
HARDIN-DAVIDSON
356 Pollasky Avenue, Ste. 200
Clovis, CA 93612
559.323.4995

STRUCTURAL ENGINEERING AND STEEL CONSTRUCT
TEICHERT SOLAR
10620 Treena Street, Suite 140,
San Diego, CA 92131

ARCHITECT OF RECORD
M M P V d e s i g n
Mariana Moncada, Architect
718 West Arbor Drive
San Diego, CA 92103
619.632.2883

ARCHITECT / ENGINEER OF RECORD
REGISTERED PROFESSIONAL ENGINEER R. J. HARDIN NO. 9125 ELECTRICAL STATE OF CALIFORNIA

PROJECT:
SAN MATEO COUNTY MEDICAL CENTER

222 W 39TH AVENUE
SAN MATEO, CA 94403

NO.	REVISION	DATE

DATE: 07.21.23

SHEET TITLE:
OUTDOOR LIGHTING TITLE 24 COMPLIANCE REPORT

SHEET NO.:
E7.0

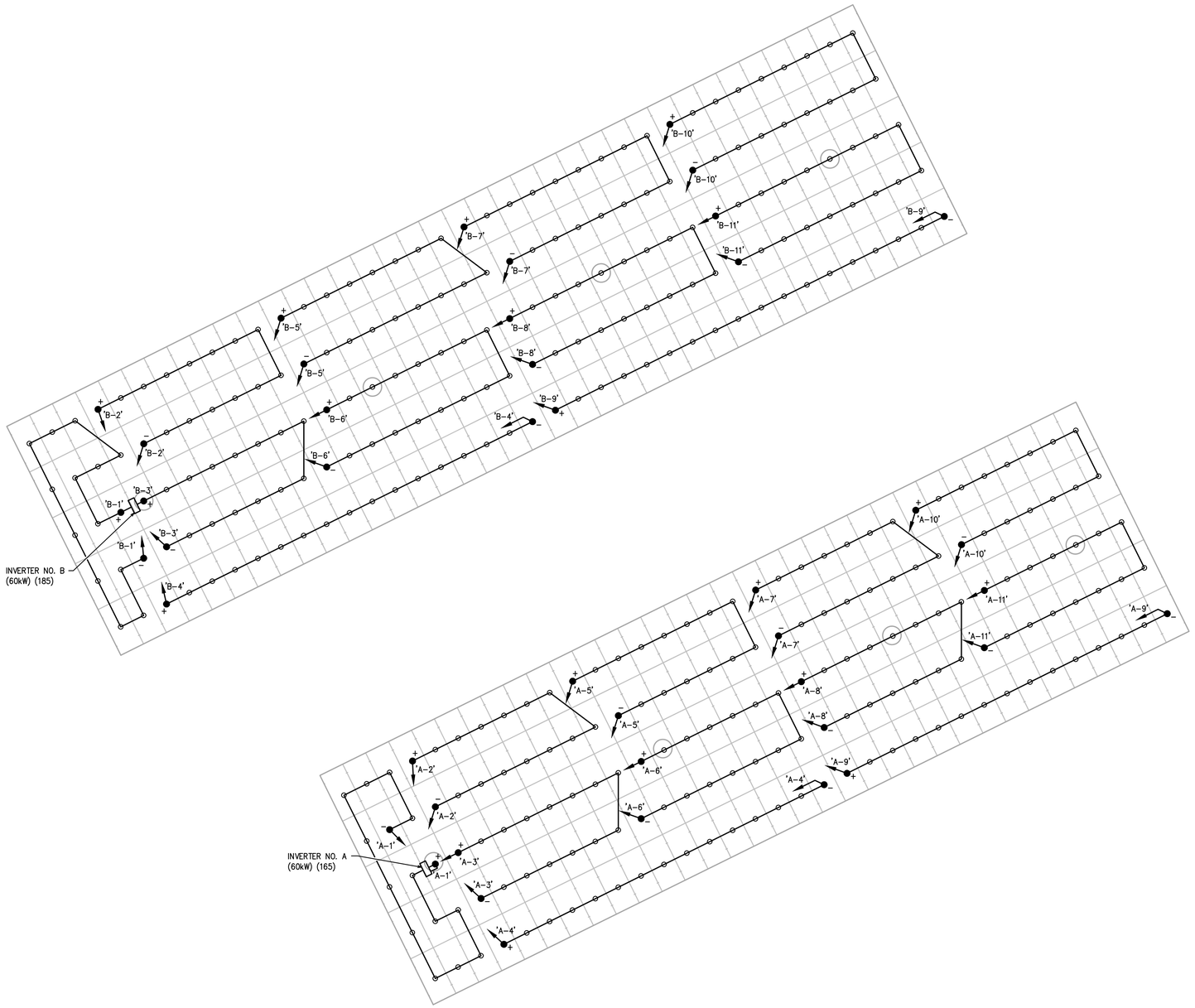

PV ARRAY STRING CABLING PLAN

SCALE: 1/8"=1'-0"

NORTH

SYSTEM HOST

800 North Humboldt Street
San Mateo, CA 94401

SYSTEM DEVELOPER

FOREFRONT POWER

100 Montgomery Street, Suite 725
San Francisco, CA 94104

GENERAL CONTRACTOR

COLLINS ELECTRICAL COMPANY INC.

1902 Channel Drive
West Sacramento, CA 95691
916-567-1100

ELECTRICAL ENGINEER

HARDIN-DAVIDSON ENGINEERING

HARDIN-DAVIDSON
356 Pollasky Avenue, Ste. 200
Clovis, CA 93612
559.323.4995

STRUCTURAL ENGINEERING AND STEEL CONSTRUCT

TEICHERT SOLAR

10620 Treena Street, Suite 140,
San Diego, CA 92131

ARCHITECT OF RECORD

M M **P V** d e s i g n

Mariana Moncada, Architect
718 West Arbor Drive
San Diego, CA 92103
619.632.2883

ARCHITECT / ENGINEER OF RECORD

REGISTERED PROFESSIONAL ENGINEER
R. J. HARDIN
NO. 9125
ELECTRICAL
STATE OF CALIFORNIA

PROJECT:

SAN MATEO COUNTY MEDICAL CENTER

222 W 39TH AVENUE
SAN MATEO, CA 94403

NO.	REVISION	DATE

DATE: 07.21.23

SHEET TITLE:

PV ARRAY ELECTRICAL STRING CABLING PLAN

SHEET NO.:

E8.0

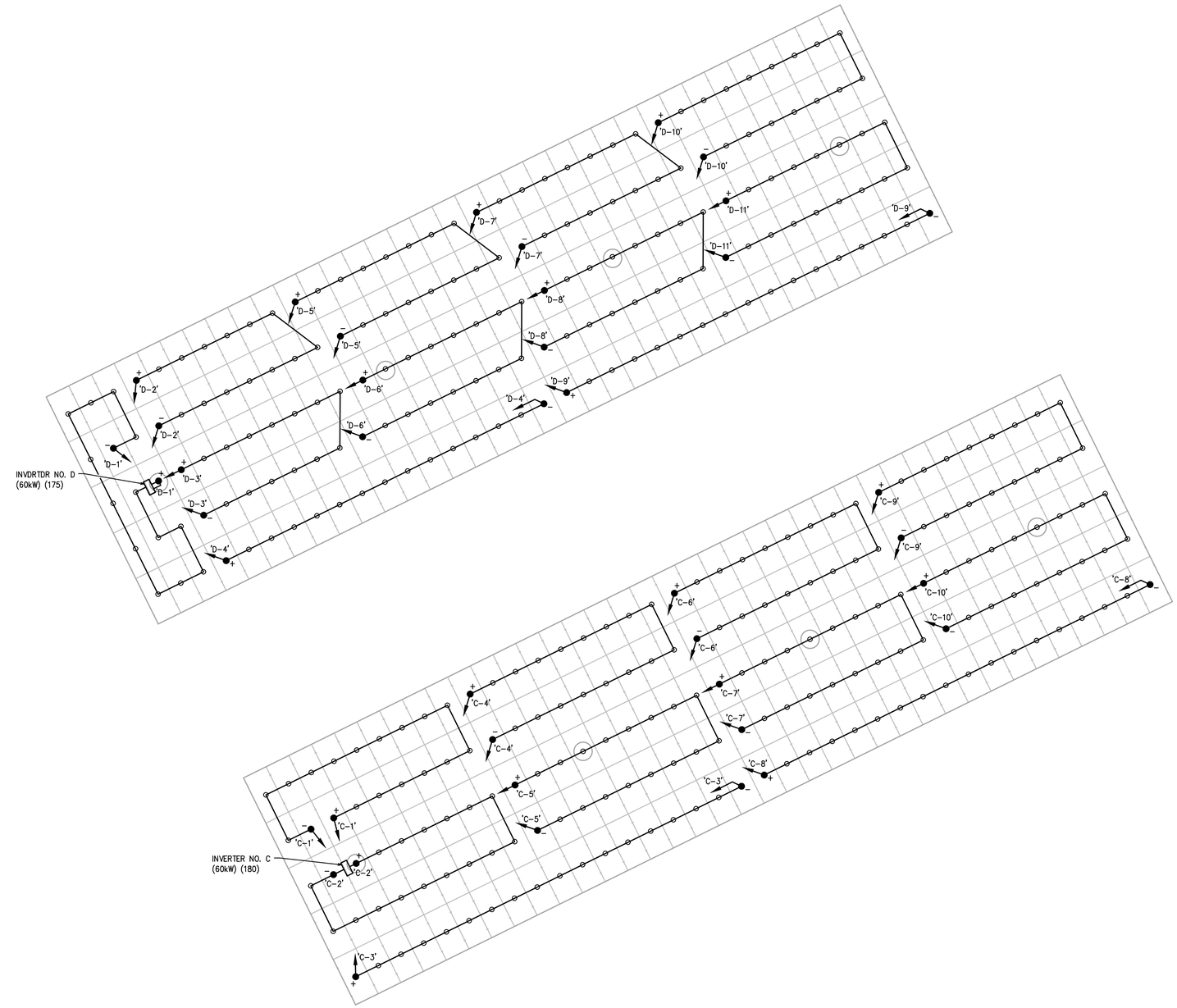

PV ARRAY STRING CABLING PLAN

SCALE: 1/8"=1'-0"

NORTH

SYSTEM HOST

COUNTY OF SAN MATEO CALIFORNIA

800 North Humboldt Street
San Mateo, CA 94401

SYSTEM DEVELOPER

FOREFRONT POWER

100 Montgomery Street, Suite 725
San Francisco, CA 94104

GENERAL CONTRACTOR

COLLINS ELECTRICAL COMPANY INC.

1902 Channel Drive
West Sacramento, CA 95691
916-567-1100

ELECTRICAL ENGINEER

HARDIN-DAVIDSON ENGINEERING

HARDIN-DAVIDSON
356 Pollasky Avenue, Ste. 200
Clovis, CA 93612
559.323.4995

STRUCTURAL ENGINEERING AND STEEL CONSTRUCT

TEICHERT SOLAR

10620 Treena Street, Suite 140,
San Diego, CA 92131

ARCHITECT OF RECORD

M M **P V** d e s i g n

Mariana Moncada, Architect
718 West Arbor Drive
San Diego, CA 92103
619.632.2883

ARCHITECT / ENGINEER OF RECORD

REGISTERED PROFESSIONAL ENGINEER
R.J.HARDIN
NO. 9125
ELECTRICAL
STATE OF CALIFORNIA

PROJECT:

SAN MATEO COUNTY MEDICAL CENTER

222 W 39TH AVENUE
SAN MATEO, CA 94403

NO.	REVISION	DATE

DATE: 07.21.23

SHEET TITLE:

PV ARRAY
ELECTRICAL STRING
CABLING PLAN

SHEET NO.:

E8.1

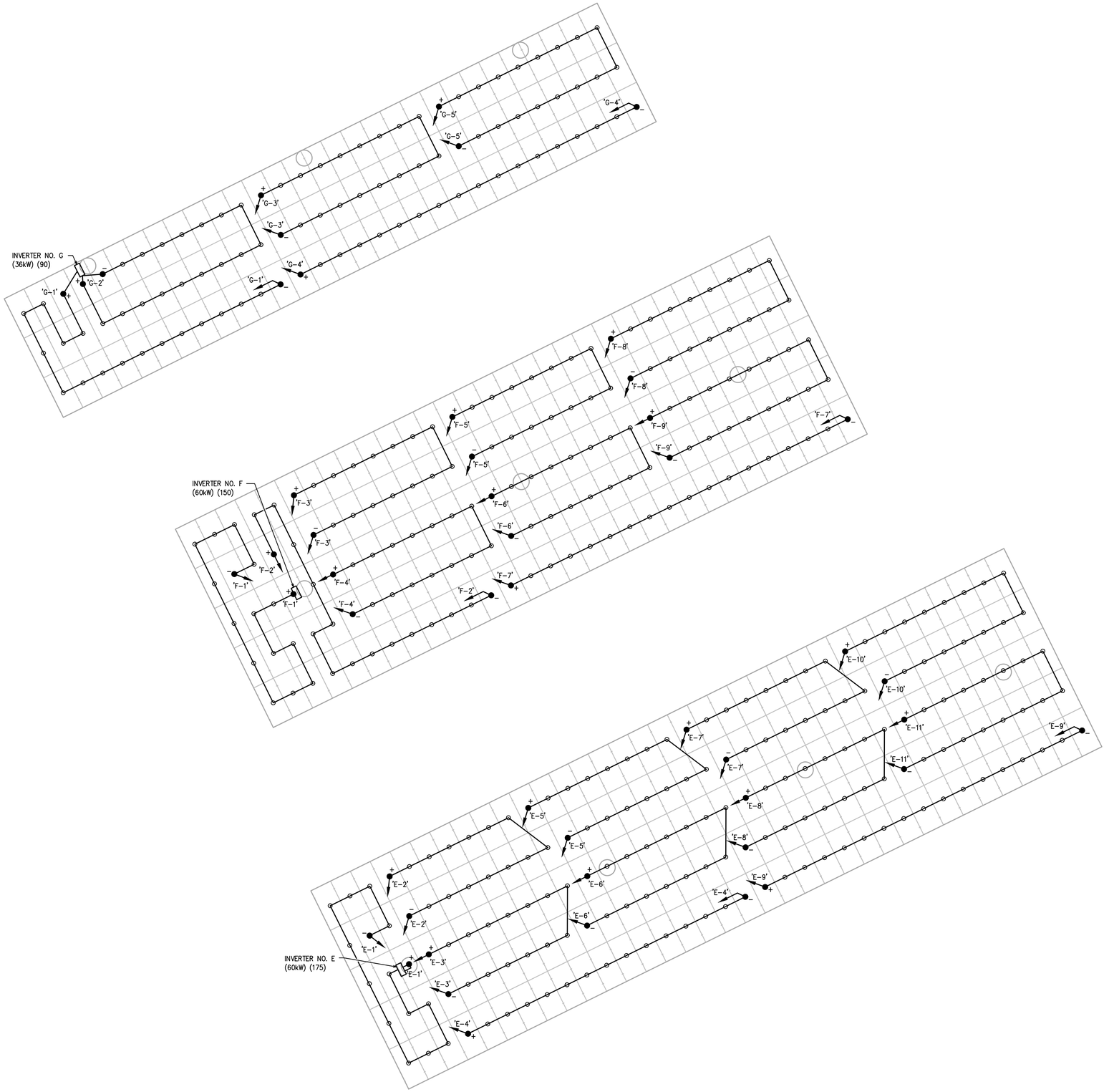

PV ARRAY STRING CABLING PLAN

SCALE: 1/8"=1'-0"

NORTH

SYSTEM HOST

COUNTY OF SAN MATEO CALIFORNIA

800 North Humboldt Street
San Mateo, CA 94401

SYSTEM DEVELOPER

FOREFRONT POWER

100 Montgomery Street, Suite 725
San Francisco, CA 94104

GENERAL CONTRACTOR

COLLINS ELECTRICAL COMPANY INC.

1902 Channel Drive
West Sacramento, CA 95691
916-567-1100

ELECTRICAL ENGINEER

HARDIN-DAVIDSON ENGINEERING

HARDIN-DAVIDSON
356 Pollasky Avenue, Ste. 200
Clovis, CA 93612
559.323.4995

STRUCTURAL ENGINEERING AND STEEL CONSTRUCT

TEICHERT SOLAR

10620 Treena Street, Suite 140,
San Diego, CA 92131

ARCHITECT OF RECORD

M M **P V** d e s i g n

Mariana Moncada, Architect
718 West Arbor Drive
San Diego, CA 92103
619.632.2883

ARCHITECT / ENGINEER OF RECORD

REGISTERED PROFESSIONAL ENGINEER
R. J. HARDIN
NO. 9125
ELECTRICAL
STATE OF CALIFORNIA

PROJECT:

SAN MATEO COUNTY MEDICAL CENTER

222 W 39TH AVENUE
SAN MATEO, CA 94403

NO.	REVISION	DATE

DATE: 07.21.23

SHEET TITLE:

PV ARRAY
ELECTRICAL STRING
CABLING PLAN

SHEET NO.:

E8.2



PV ARRAY STRING CABLING PLAN

SCALE: 1/8"=1'-0"

SYSTEM HOST

800 North Humboldt Street
San Mateo, CA 94401

SYSTEM DEVELOPER

FOREFRONT POWER

100 Montgomery Street, Suite 725
San Francisco, CA 94104

GENERAL CONTRACTOR

COLLINS ELECTRICAL COMPANY INC.

1902 Channel Drive
West Sacramento, CA 95691
916-567-1100

ELECTRICAL ENGINEER

HARDIN-DAVIDSON ENGINEERING

HARDIN-DAVIDSON
356 Pollasky Avenue, Ste. 200
Clovis, CA 93612
559.323.4995

STRUCTURAL ENGINEERING AND STEEL CONSTRUCT

TEICHERT SOLAR

10620 Treena Street, Suite 140,
San Diego, CA 92131

ARCHITECT OF RECORD

M M **P V** d e s i g n

Mariana Moncada, Architect
718 West Arbor Drive
San Diego, CA 92103
619.632.2883

ARCHITECT / ENGINEER OF RECORD

REGISTERED PROFESSIONAL ENGINEER
R. J. HARDIN
NO. 9125
ELECTRICAL
STATE OF CALIFORNIA

PROJECT:

SAN MATEO COUNTY MEDICAL CENTER

222 W 39TH AVENUE
SAN MATEO, CA 94403

NO.	REVISION	DATE

DATE: 07.21.23

SHEET TITLE:

PV ARRAY
ELECTRICAL STRING
CABLING PLAN

SHEET NO.:

E8.3



PV ARRAY STRING CABLING PLAN

SCALE: 1/8"=1'-0"

NORTH

SYSTEM HOST

800 North Humboldt Street
San Mateo, CA 94401

SYSTEM DEVELOPER

FOREFRONT POWER
100 Montgomery Street, Suite 725
San Francisco, CA 94104

GENERAL CONTRACTOR

COLLINS ELECTRICAL COMPANY INC.
1902 Channel Drive
West Sacramento, CA 95691
916-567-1100

ELECTRICAL ENGINEER

HARDIN-DAVIDSON ENGINEERING
HARDIN-DAVIDSON
356 Pollasky Avenue, Ste. 200
Clovis, CA 93612
559.323.4995

STRUCTURAL ENGINEERING AND STEEL CONSTRUCT

TEICHERT SOLAR
10620 Treena Street, Suite 140,
San Diego, CA 92131

ARCHITECT OF RECORD

M M P V d e s i g n
Mariana Moncada, Architect
718 West Arbor Drive
San Diego, CA 92103
619.632.2883

ARCHITECT / ENGINEER OF RECORD

REGISTERED PROFESSIONAL ENGINEER
R. J. HARDIN
NO. 9125
ELECTRICAL
STATE OF CALIFORNIA

PROJECT:

SAN MATEO COUNTY MEDICAL CENTER

222 W 39TH AVENUE
SAN MATEO, CA 94403

NO.	REVISION	DATE

DATE: 07.21.23

SHEET TITLE:

PV ARRAY ELECTRICAL STRING CABLING PLAN

SHEET NO.:

E8.4

GENERAL STRUCTURAL NOTES

DESIGN CRITERIA

BUILDING CODE: 2022 CALIFORNIA BUILDING CODE, REFERRED TO AS "THE CODE"
GOVERNING JURISDICTION: CITY OF SAN MATEO, CA
OCCUPANCY TYPE: S-2

ROOF LIVE LOADS:
DISTRIBUTED = 12 PSF *
POINT LOAD = 300 LBS **

* NON-CONCURRENT W/ PV PANEL DEAD LOAD & WIND LOAD
** CONCURRENT W/ PV PANEL DEAD

SNOW LOADS:
ZERO

WIND ANALYSIS: DIRECTIONAL PROCEDURE PER ASCE 7, CHAPTER 27
BASIC WIND SPEED, V = 91 MPH
WIND EXPOSURE = CATEGORY B
RISK CATEGORY = II
GUST EFFECT FACTOR, G = 0.85
INTERNAL PRESSURE COEFFICIENT, GCpi = ±0

SEISMIC CRITERIA:
SITE CLASSIFICATION = C
RISK CATEGORY = II
SEISMIC DESIGN CATEGORY = D
SEISMIC ANALYSIS: ASCE 7-16, CHAPTER 12
SEISMIC FORCE-RESISTING SYSTEM = STEEL ORDINARY CANTILEVER COLUMN
RESPONSE MODIFICATION COEFFICIENT, R = 1.25
SYSTEM OVERSTRENGTH FACTOR, Ωo = 1.25
DEFLECTION AMPLIFICATION FACTOR, Cd = 1.25
SEISMIC IMPORTANCE FACTOR, IE = 1.0
REDUNDANCY FACTOR, ρ = 1.0
Ss= 1.989g, Sds = 0.326g
S1 = 0.935g, Sd1 = 0.810g
SEISMIC BASE SHEAR.....Cs = 0.2608W

GENERAL

1. THE CONTRACTOR SHALL VERIFY ALL DIMENSIONS PRIOR TO STARTING CONSTRUCTION. DO NOT SCALE THE DRAWINGS. THE ENGINEER SHALL BE NOTIFIED OF ANY DISCREPANCIES OR INCONSISTENCIES. SUBMIT CLARIFICATION REQUEST PRIOR TO PROCEEDING WITH WORK.
2. ALL DRAWINGS ARE CONSIDERED TO BE A PART OF THE CONTRACT DOCUMENTS. THE CONTRACTOR SHALL BE RESPONSIBLE FOR THE REVIEW AND COORDINATION OF ALL DRAWINGS PRIOR TO THE START OF CONSTRUCTION. ANY DISCREPANCIES THAT OCCUR SHALL BE BROUGHT TO THE ATTENTION OF THE ENGINEER PRIOR TO START OF CONSTRUCTION SO THAT A CLARIFICATION CAN BE ISSUED. ANY DEVIATION FROM THE APPROVED SET OF CONTRACT DOCUMENTS SHALL ONLY BE MADE AFTER WRITTEN APPROVAL BY THE ENGINEER OF RECORD. ANY WORK PERFORMED IN CONFLICT WITH THE CONTRACT DOCUMENTS OR ANY CODE REQUIREMENTS SHALL BE CORRECTED BY THE CONTRACTOR AT THEIR OWN EXPENSE.
3. THE STRUCTURES IN THESE CONTRACT DOCUMENTS ARE PROPRIETARY TO TEICHERT ENERGY & UTILITIES GROUP, INC. DBA TEICHERT SOLAR. THESE STRUCTURES MAY NOT GO OUT TO BID AND MUST BE BUILT BY TEICHERT SOLAR.
4. NOTES AND DETAILS ON DRAWINGS SHALL TAKE PRECEDENCE OVER GENERAL NOTES AND TYPICAL DETAILS. WHERE NO DETAILS ARE GIVEN, CONSTRUCTION SHALL BE AS SHOWN FOR SIMILAR WORK. UNLESS NOTED OTHERWISE, DETAILS IN STRUCTURAL DRAWINGS ARE TYPICAL AS INDICATED BY CUTS, REFERENCES OR TITLES.
5. ALL WORK SHALL CONFORM TO THE MINIMUM STANDARDS OF THE FOLLOWING LOCAL BUILDING CODE, AND ANY OTHER REGULATING AGENCIES WHICH HAVE AUTHORITY OVER ANY PORTION OF THE WORK AND THOSE CODES AND STANDARDS LISTED IN THESE NOTES AND SPECIFICATIONS.
6. THE CONTRACT STRUCTURAL DRAWINGS AND SPECIFICATIONS REPRESENT THE FINISHED STRUCTURE. THEY DO NOT INDICATE THE METHOD OF CONSTRUCTION. THE CONTRACTOR SHALL PROVIDE ALL MEASURES NECESSARY TO PROTECT THE STRUCTURE DURING CONSTRUCTION. SUCH MEASURES SHALL INCLUDE, BUT NOT BE LIMITED TO, BRACING, SHORING FOR LOADS DUE TO CONSTRUCTION EQUIPMENT, ETC. OBSERVATION VISITS TO THE SITE BY THE STRUCTURAL ENGINEER SHALL NOT INCLUDE INSPECTION OF THE ABOVE ITEMS.
7. ALL REFERENCED STANDARDS (i.e. ACI, AISC, ASTM, ETC.) SHOWN IN THESE DOCUMENTS SHALL BE PER THE LATEST ADOPTED EDITION AS LISTED IN CHAPTER 35 OF THE CODE.
8. CONTRACTOR TO PROVIDE A LIST OF ALL PROPOSED SUBSTITUTIONS, WITH APPLICABLE MANUFACTURER'S ICC/IAPMO REPORTS, TO ARCHITECT, ENGINEER OF RECORD AND GOVERNING JURISDICTION FOR REVIEW AND APPROVAL BEFORE FABRICATION.

POST-INSTALLED CONCRETE ANCHORS

1. POST-INSTALLED ANCHORAGE SHALL BE AS DETAILED ON THE PLANS. SUBSTITUTION OF PRODUCTS SPECIFICALLY DETAILED IN THESE DRAWINGS SHALL NOT BE ALLOWED WITHOUT WRITTEN APPROVAL FROM THE STRUCTURAL ENGINEER OF RECORD.
2. SPECIAL INSPECTION IS REQUIRED FOR ALL POST-INSTALLED ANCHORS, U.N.O.
3. WHERE ANCHOR TYPE IS NOT NOTED OR AN ALTERNATE BRAND IS PREFERRED, THE FOLLOWING PRODUCTS ARE ACCEPTABLE TO BE SUBMITTED FOR A SUBSTITUTION REQUEST:

   EXPANSION ANCHORS
   a. HILTI KWIK BOLT TZ (ICC ESR-1917)
   b. SIMPSON STRONG-BOLT-2 (ICC ESR-3037)
   c. POWERS POWER-STUD +SD2 (ICC ESR-2502)
   d. ALTERNATE APPROVED BY THE SEOR

4. ALL CONCRETE ANCHORS WHICH ARE EXPOSED TO THE WEATHER SHALL BE STAINLESS STEEL OR HOT DIP GALVANIZED.

FOUNDATIONS

1. FOUNDATION DESIGN BASED ON THE FOLLOWING GEOTECHNICAL REPORT:
   COMPANY: CRAWFORD & ASSOCIATES
   DATE: APRIL 10, 2020
   REPORT NUMBER: 20-607.2
2. DRILLED PIERS ARE DESIGNED BASED ON THE FOLLOWING INFORMATION:
   ALLOWABLE LATERAL BEARING PRESSURE = 4,000 PSF*
   ALLOWABLE SKIN FRICTION = 300 / 500 PSF*

   * A 1/3 INCREASE MAY BE APPLIED WHEN SHORT TERM LOADING
3. DE-WATERING OF EXCAVATIONS FROM EITHER SURFACE WATER, GROUND WATER, OR SEEPAGE SHOULD BE PERFORMED, IF REQUIRED.
4. FOUNDATIONS SHALL BE PLACED AND ESTIMATED ACCORDING TO DEPTHS SHOWN ON DRAWINGS. SHOULD SOIL ENCOUNTERED AT THESE DEPTHS NOT BE APPROVED BY THE INSPECTOR OR SOILS ENGINEER, FOUNDATION ELEVATIONS WILL BE ALTERED.
5. FOOTING BACKFILL AND UTILITY TRENCH BACKFILL SHALL BE MECHANICALLY COMPACTED IN LAYERS IN ACCORDANCE WITH THE SOILS REPORT OR BACKFILLED WITH 2-SACK SAND CEMENT SLURRY AND APPROVED BY THE SPECIAL INSPECTOR. SOILS REPORT SHALL TAKE PRECEDENT WHEN RECOMMENDATION GIVEN.
6. CONTRACTOR SHALL INVESTIGATE SITE DURING CLEARING AND EARTHWORK OPERATIONS FOR FILLED EXCAVATIONS OR BURIED STRUCTURES, SUCH AS CESSPOOLS, CISTERNS, FOUNDATIONS, ETC. IF ANY SUCH STRUCTURES ARE FOUND, STRUCTURAL ENGINEER SHALL BE NOTIFIED IMMEDIATELY.
7. SOIL REMOVAL AND RECOMPACTION SHALL BE PER THE SOILS REPORT AND APPROVED CONTRACT DOCUMENTS.
8. THE DRILLED PIERS MUST BE INSPECTED BY THE SOILS ENGINEER PRIOR TO PLACING CONCRETE AND REINFORCING STEEL. ADJUST SHAFT LENGTHS UNDER DIRECTION OF THE SOILS ENGINEER AND THE OWNER'S REPRESENTATIVE BASED ON SOIL CONDITIONS AT TIME OF DRILLING.
9. PRECAUTIONS SHOULD BE TAKEN DURING THE INSTALLATION OF PIERS TO MINIMIZE THE POSSIBILITY OF CAVING. PIERS SPACED CLOSER 3 PIER DIAMETERS SHOULD BE DRILLED AND FILLED ALTERNATELY, ALLOWING THE CONCRETE TO SET AT LEAST EIGHT HOURS BEFORE DRILLING AN ADJACENT HOLE.
10. PIER EXCAVATIONS SHOULD BE FILLED WITH CONCRETE WITHIN 72 HOURS OR AS NOTED IN THE SOILS REPORT AFTER DRILLING AND INSPECTION, WHICHEVER IS SOONER.
11. KEEP EXCAVATIONS FREE OF WATER BEFORE PLACING CONCRETE UNLESS OTHERWISE APPROVED BY THE SOILS ENGINEER. IF UNABLE TO SEAL OFF WATER FLOW, PER THE APPROVAL OF THE SOILS ENGINEER, ALLOW WATER LEVEL TO ATTAIN ITS NORMAL LEVEL AND PLACE CONCRETE BY THE TREMIE METHOD OR OTHER APPROVED METHOD.
12. PLACE REINFORCING STEEL IN ONE CONTINUOUS UNIT AND ACCURATELY HOLD SECURELY IN FINAL POSITION USING CHAIRS OR SPACERS DURING CONCRETE PLACEMENT.
13. AN UNREINFORCED HEIGHT OF 18 INCHES AT THE BOTTOM OF THE SHAFT IS ACCEPTABLE.
14. CONSTRUCTION SHALL COMPLY WITH THE REQUIREMENTS OF ACI 336.3R, LATEST EDITION.

CONCRETE

1. ALL CONCRETE CONSTRUCTION SHALL CONFORM WITH THE CODE AND WITH THE PROVISIONS OF ACI 318 AND ACI 301.
2. CONCRETE MIXES SHALL BE DESIGNED BY A QUALIFIED TESTING LABORATORY AND APPROVED BY THE STRUCTURAL ENGINEER.
   a. MIX DESIGN METHODS (TEST HISTORY OR TRIAL BATCH METHOD) PER THE CODE SHALL BE USED TO PROPORTION CONCRETE. SUBMIT MIX DESIGN METHOD DATA
   b. MIX DESIGNS SHALL SATISFY EITHER THE SHRINKAGE CRITERIA OR THE W/C RATIO AND TOTAL WATER CRITERIA.
3. SCHEDULE OF STRUCTURAL CONCRETE PERFORMANCE REQUIREMENTS:

MINIMUM CONCRETE PROPERTIES			
ELEMENT	f'c @ 28 DAYS [PSI]	MAX W/C	MAX DENSITY [PCF]
30" DIAM. PIER FOUNDATIONS	5,000	0.50	150
24" DIAM. PIER FOUNDATIONS	3,000	0.50	150
EQUIPMENT PADS & MISC.	3,000	0.50	150

4. PORTLAND CEMENT SHALL CONFORM TO ASTM C-150 TYPE II
5. AGGREGATE FOR HARDROCK CONCRETE SHALL CONFORM TO ALL REQUIREMENTS AND TESTS OFASTM C33 AND PROJECT SPECIFICATIONS. EXCEPTIONS MAY BE USED ONLY WITH PERMISSION OF THE STRUCTURAL ENGINEER.
6. CONCRETE MIXING OPERATION, ETC. SHALL CONFORM TO ASTM C94.
7. PLACEMENT OF CONCRETE SHALL CONFORM TO ACI 301 AND PROJECT SPECIFICATIONS. CLEAN AND ROUGHEN TO MIN. ¼" AMPLITUDE ALL CONCRETE SURFACES AGAINST WHICH NEW CONCRETE IS TO BE PLACED.
8. ALL REINFORCING BARS, ANCHOR BOLTS, AND OTHER CONCRETE INSERTS SHALL BE WELL SECURED IN POSITION PRIOR TO PLACING CONCRETE.
9. PIPES OR CONDUITS LARGER THAN 4" DIAMETER SHALL NOT BE EMBEDDED IN STRUCTURAL CONCRETE EXCEPT WHERE SPECIFICALLY PERMITTED OR APPROVED BY STRUCTURAL ENGINEER. PIPES OR CONDUITS SHALL NOT DISPLACE OR INTERRUPT REINFORCING BARS. SPACE THE PIPES OR CONDUITS SUCH THAT PROPER CONCRETE PLACEMENT AND CONSOLIDATION IS ACHIEVED.
10. PROVIDE MIN. ¾" CHAMFER ON ALL EXPOSED CORNERS.
11. THE STEEL STRUCTURES MAY BE INSTALLED 48 HOURS AFTER THE FOUNDATIONS HAVE BEEN CAST OR AFTER CONCRETE REACHES A MINIMUM COMPRESSIVE STRENGTH OF 1,500-PSI,WHICHEVER COMES FIRST. BREAK TESTS NOT REQUIRED IF WAITING UNTIL 48 HOURS TO ERECT STEEL.

REINFORCING STEEL

1. REINFORCING BARS SHALL CONFORM TO THE REQUIREMENTS OF CHAPTER 19 OF THE CODE, ASTM A615 (A706 WHERE NOTED ON PLANS), GRADE 60 U.N.O.
2. BARS SHALL BE CLEAN OF RUST, GREASE, OR OTHER MATERIALS LIKELY TO IMPAIR BOND. ALL REINFORCING BAR BENDS SHALL BE MADE COLD.
3. REINFORCING BAR SPLICES SHALL, IN CONCRETE, CONFORM TO THE PROVISIONS OF ACI 318. LAP ALL HORIZONTAL BARS AT CORNERS AND INTERSECTIONS.
4. BARS IN SLABS SHALL BE SECURELY SUPPORTED ON WELL-CURED CONCRETE BLOCKS OR APPROVED METAL CHAIRS, PRIOR TO PLACING CONCRETE.
5. REINFORCING STEEL SHALL BE DETAILED IN ACCORDANCE WITH ACI 315.
6. COMPLETE AND DETAILED REINFORCING PLACEMENT DRAWINGS SHALL BE PREPARED AND SUBMITTED FOR REVIEW BY THE STRUCTURAL ENGINEER PRIOR TO FABRICATION IN ACCORDANCE WITH SPECIFICATIONS AND APPLICABLE CODES. THE APPROVED DRAWINGS SHALL BE AVAILABLE ON THE JOB SITE PRIOR TO PLACING OF CONCRETE.
7. REBAR SPACINGS GIVEN ARE MAXIMUM ON CENTER WHETHER STATED AS "O.C." OR NOT. UNLESS A SPECIFIED LENGTH IS GIVEN, ALL REBAR IS CONTINUOUS WHETHER STATED AS "CONT." OR NOT.
8. MECHANICAL BAR SPLICES (COUPLERS) SHALL BE USED WHERE SPECIFIED ON PLANS. THEY MAY ALSO BE USED AT THE CONTRACTOR'S OPTION IN LIEU OF LAP SPLICES AND WHERE REINFORCING IS SHOWN CONTINUOUS THROUGH CONSTRUCTION JOINTS. UNLESS NOTED OTHERWISE, ALL MECHANICAL BAR SPLICES SHALL BE "TYPE 2" AS DEFINED BY ACI 318.
9. COUPLERS SHALL BE AND BE LENTON A2 SERIES MECHANICAL SPLICES (IAPMO ER-0129), OR EQUIVALENT, AND INSTALLED PER THE MANUFACTURER'S RECOMMENDATIONS.
9. CONTINUOUS INSPECTION OF CONCRETE SHALL INCLUDE INSPECTION DURING INSTALLATION OF REINFORCING STEEL. INSPECTION SHALL BE SCHEDULED SO THAT PLACEMENT OF REINFORCING STEEL, CONDUIT, SLEEVES, AND EMBEDDED ITEMS, MAY BE CORRECTED PRIOR TO THE SCHEDULED POUR
10. CONCRETE PROTECTION FOR REINFORCEMENT:
    a. CAST-IN-PLACE CONCRETE. THE FOLLOWING MINIMUM CONCRETE COVER SHALL BE PROVIDED FOR REINFORCEMENT:

MINIMUM CONCRETE COVER		
ELEMENT	COVER	TOLERANCE (+/-)
PERMANENTLY CAST AGAINST OR PERMANENTLY EXPOSED TO EARTH	3"	⅜"
EXPOSED TO EARTH OR WEATHER		
a) #6 THROUGH #18 BAR	2"	⅜"
b) #5 BAR OR SMALLER	1½"	⅜"
NOT EXPOSED TO WEATHER OR CAST AGAINST GROUND	¾"	½"

SUBMITTALS

1. THE STRUCTURAL SHOP DRAWING REVIEW IS INTENDED TO HELP THE ENGINEER VERIFY THE DESIGN CONCEPT. IT IS THE CONTRACTOR'S RESPONSIBILITY TO CHECK THEIR OWN SHOP DRAWINGS.
2. THE STRUCTURAL SHOP DRAWINGS WILL BE RETURNED FOR RESUBMITTAL IF A CURSORY REVIEW SHOWS MAJOR ERRORS WHICH SHOULD HAVE BEEN FOUND BY THE CONTRACTOR'S CHECKING.
3. THE FOLLOWING SHOP DRAWINGS ARE NOT REQUIRED FOR SUBMITTAL FOR STRUCTURAL REVIEW:
   a. SHORING AND BRACING.
   b. UNSPLICED REBAR AT SLAB-ON-GRADE AND SPREAD FOOTINGS.
   c. FORMWORK.
   d. STRUCTURAL STEEL MILL REPORTS.
4. THE FOLLOWING SHOP DRAWINGS (AND CALCULATIONS WHEN APPLICABLE) ARE REQUIRED FOR SUBMITTAL FOR STRUCTURAL REVIEW:
   a. CONCRETE MIX DESIGNS, INCLUDING STRENGTH TEST RESULTS
   b. REINFORCING STEEL (EXCEPT WHERE NOTED BY NOTE 3 ABOVE)
   c. STRUCTURAL STEEL
   d. ANCHOR ROD CUT SHEET WITH DIAMETER, LENGTH, AND MATERIAL STRENGTH
   e. WELDING PROCEDURE SPECIFICATIONS
5. ANY SUBMITTAL OF A DETAIL SHEET WITH ADDED INFORMATION NOT SHOWN ON PLANS SHALL BE ACCOMPANIED BY LOCATION PLAN IDENTIFYING THE MEMBERS INVOLVED AND CLOUDING AROUND ADDED INFORMATION.
6. THE SHOP DRAWINGS SHALL REFERENCE THE DATA OF THE DESIGN USED TO PRODUCE THE SUBMITTAL.
7. CONTRACTOR/SUBCONTRACTOR TO PROVIDE DIGITAL SET OF SHOP DRAWINGS FOR REVIEW BY THE STRUCTURAL ENGINEER. DIGITAL SET WILL BE RETURNED TO THE CONTRACTOR FOR DISTRIBUTION.

COLD FORMED STEEL

1. ALL COLD-FORMED METAL FRAMING CONSTRUCTION SHALL BE IN ACCORDANCE WITH AISI S100 "SPECIFICATIONS FOR DESIGN OF COLD-FORMED STEEL STRUCTURAL MEMBERS".
2. ALL COLD-FORMED STEEL SHALL CONFORM TO THE FOLLOWING (U.N.O.):

43 MIL / 18GA AND LIGHTER	ASTM A1003, GR 33 OR ASTM 653, GR 33
54 MIL / 16 GA AND HEVIER	ASTM A1003, GR 55 OR ASTM 653, GR 55

3. ALL COLD-FORMED STEEL SHALL HAVE A MINIMUM COATING PROTECTION G90.
4. WELDING IS NOT PERMITTED UNLESS SPECIFICALLY APPROVED BY THE SEOR.
5. ALL APPROVED WELDING SHALL BE PERFORMED BY WELDERS CERTIFIED FOR ALL APPROPRIATE DIRECTIONS COMPLYING WITH AWS D1.3. WELDING RODS SHALL CONFORM TO THE FOLLOWING:

43 MIL / 18GA AND LIGHTER	E60XX
54 MIL / 16 GA AND HEVIER	E70XX OR E6013
COLD FORMED TO STRUCTURAL STEEL	E70XX LOW HYDROGEN

6. WIRE TYING OF FRAMING COMPONENTS SHALL NOT BE PERMITTED.
7. TEMPORARY BRACING REQUIREMENTS ARE THE RESPONSIBILITY OF THE CONTRACTOR.
8. ALL SCREWS SHALL BE FULLY DRIVEN AND PROTRUDE THE LARGER OF 3 THREADS OR 1/4" THROUGH THE LAST MATERIAL JOINED. THERE SHALL BE NO SPACE BETWEEN JOINING MEMBERS AT THE SCREW LOCATION.
9. ALL FIELD CUTTING OF MEMBERS SHALL BE BY SAWING OR SHEARING. TORCH OR PLASMA CUTTING OF MEMBERS SHALL NOT BE PERMITTED.
10. ALL FRAMING COMPONENTS SHALL BE CUT SQUARELY FOR ATTACHMENT TO PERPENDICULAR MEMBERS OR AS REQUIRED ON AN ANGULAR FIT AGAINST ABUTTING MEMBERS. MEMBERS SHALL BE HELD POSITIVELY IN PLACE UNTIL PROPERLY FASTENED.
11. SPLICING OF PURLINS OR OTHER LOAD CARRYING MEMBERS SHALL NOT BE PERMITTED UNLESS SPECIFICALLY APPROVED BY THE ENGINEER OF RECORD.
12. WHEN CLIP ANGLES WITH SCREW CONNECTIONS ARE USED TO ATTACH A COMPONENT TO THE PRIMARY STRUCTURE, THE CLIP ANGLE SHALL BE FASTENED TO THE PRIMARY STRUCTURE FIRST, THEN THE COMPONENT SHALL BE BROUGHT TO BEAR ON THE STRUCTURE AND FASTENED TO THE CLIP ANGLE.
13. MEMBERS SHALL BE IDENTIFIED PER SECTION 2202A.1 OF 2022 CBC PART 2, VOL. 2.
14. ALL EXTERIOR SCREWS SHALL BE ELCO DRIL-FLEX (ICC ESR-3332) OR ITW BUILDEX TEKS SELECT (ICC ESR-3223) UNLESS APPROVED BY THE SEOR.

STRUCTURAL INSPECTION AND TESTING

THE FOLLOWING ELEMENTS OF CONSTRUCTION SHALL REQUIRE SPECIAL INSPECTION PER CHAPTER 17A OF THE CODE. U.N.O.

SPECIAL INSPECTIONS AND TESTING SHALL BE PROVIDED BY AN INSPECTION AGENCY, EMPLOYED BY THE OWNER, AND QUALIFIED BY THE BUILDING OFFICIAL TO INSPECT THE PARTICULAR TYPE OF CONSTRUCTION. TESTS AND INSPECTIONS, AS REQUIRED BY SECTIONS 110.3 & 1705A OF THE 2022 CBC W/ CALIFORNIA AMENDMENTS, SHALL BE PERFORMED DURING CONSTRUCTION ON THE TYPES OF WORK LISTED BELOW:

TESTING AND INSPECTION		
	INSPECTIONS	TESTING
STEEL CONSTRUCTION	1705A.2	1705A.13
CONCRETE CONSTRUCTION	1705A.3	1705A.3
SOILS	1705A.6	1705A.6
CAST IN-PLACE DEEP FOUNDATIONS	1705A.8	1705A.8

1. THE SPECIAL INSPECTIONS IDENTIFIED ON PLANS ARE, IN ADDITION TO, AND NOT A SUBSTITUTE FOR, THOSE INSPECTIONS REQUIRED TO BE PERFORMED BY THE GOVERNING JURISDICTION. SPECIALLY INSPECTED WORK WHICH IS INSTALLED OR COVERED WITHOUT THE APPROVAL OF AN INSPECTOR FROM THE GOVERNING JURISDICTION IS SUBJECT TO REMOVAL OR EXPOSURE.
2. FOR CONTINUOUS INSPECTION, WHEN WORK IN MORE THAN ONE CATEGORY OF WORK REQUIRING SPECIAL INSPECTION IS TO BE PERFORMED SIMULTANEOUSLY, OR THE GEOGRAPHIC LOCATION OF THE WORK IS SUCH THAT IT CANNOT BE CONTINUOUSLY OBSERVED IN ACCORDANCE WITH THE PROVISIONS OF THE CODE, IT IS THE AGENT'S RESPONSIBILITY TO EMPLOY A SUFFICIENT NUMBER OF INSPECTORS TO ASSURE THAT ALL WORK IS INSPECTED IN ACCORDANCE WITH THOSE PROVISIONS.
3. THE SPECIAL INSPECTORS MUST BE CERTIFIED BY THE GOVERNING JURISDICTION IN THE CATEGORY OF WORK REQUIRED TO HAVE SPECIAL INSPECTION.
   EXCEPTIONS:
   a. SOILS INSPECTIONS BY THE SOILS ENGINEER OF RECORD OR PROJECT INSPECTOR
   b. WHEN WAIVED BY THE GOVERNING JURISDICTION
5. IT IS THE RESPONSIBILITY OF THE CONTRACTOR TO INFORM THE OWNER'S REPRESENTATIVE, SPECIAL INSPECTOR OR INSPECTION AGENCY AT LEAST TWO WORKING DAYS PRIOR TO PERFORMING ANY WORK THAT REQUIRES SPECIAL INSPECTION. ALL WORK PERFORMED WITHOUT REQUIRED SPECIAL INSPECTION IS SUBJECT TO REMOVAL.
6. PROVIDE SPECIAL INSPECTION FOR CONNECTIONS BOLTED WITH A325 AND A490 BOLTS. INSPECTIONS SHALL BE DONE PER APPROVED NATIONALLY RECOGNIZED STANDARDS AND THE REQUIREMENTS OF THE CODE AND THE GOVERNING JURISDICTION. WHILE THE WORK IS IN PROGRESS, THE SPECIAL INSPECTOR SHALL DETERMINE THE BOLTS, NUTS, WASHERS AND PAINT; BOLTED PARTS; AND INSTALLATION AND TIGHTENING MEET THE STANDARDS REQUIREMENTS.
7. THE SPECIAL INSPECTOR FOR HIGH STRENGTH BOLTED CONNECTIONS SHALL:
   a. OBSERVE THE CALIBRATION PROCEDURES WHEN SUCH PROCEDURES ARE REQUIRED BY THE PLANS OR SPECIFICATIONS.
   b. MONITOR THE INSTALLATION OF BOLTS TO DETERMINE THAT ALL PLIES OF CONNECTED MATERIALS HAVE BEEN DRAWN TOGETHER.
   c. MONITOR THAT THE SELECTED PROCEDURE IS PROPERLY USED TO TIGHTEN ALL BOLTS.
8. IF DEEMED NECESSARY, THE SPECIAL INSPECTOR SHALL PROVIDE PROGRESS REPORTS AND A FINAL REPORT TO THE STRUCTURAL ENGINEER.
9. THE SPECIAL INSPECTOR SHALL ENSURE THAT ALL DEFICIENCIES NOTED BY THE STRUCTURAL ENGINEER IN STRUCTURAL OBSERVATION REPORTS ARE CORRECTED. SUCH COMPLIANCE SHALL BE REFERENCED IN SPECIAL INSPECTOR REPORT.
10. THE CONSTRUCTION MATERIALS TESTING LABORATORY MUST BE APPROVED BY THE GOVERNING JURISDICTION, FOR TESTING OF MATERIALS, SYSTEMS, COMPONENTS AND, EQUIPMENTS.
11. PERIODIC INSPECTION SHALL OCCUR FREQUENTLY ENOUGH TO INSPECT ALL OF THE INSTALLED ITEMS AND TO PERIODICALLY WITNESS THE INSTALLATION OF THE ITEMS.

STRUCTURAL STEEL

1. STRUCTURAL STEEL SHALL BE DETAILED, FABRICATED, AND ERECTED IN ACCORDANCE WITH AISC 360 AND AISC 303.
2. ALL STRUCTURAL STEEL SHALL CONFORM TO THE ASTM DESIGNATION AS INDICATED BELOW (U.N.O.):

MINIMUM MATERIAL PROPERTIES	
ELEMENT	ASTM
BASE PLATES & CAP PLATES	A572, GR 50
ALL OTHER PLATES	A36, GR 36 OR DUAL GRADE
WF MATERIAL	A992, GR 50
HSS MATERIAL	A500, GR C
STRUCTURAL PIPES	A53, GR B
HIGH STRENGTH BOLTS	F3125 GR A325
MACHINE BOLTS	A307
ANCHOR BOLTS	F1554, GR 105

3. THE STRUCTURAL STEEL FABRICATOR SHALL FURNISH SHOP DRAWINGS OF ALL STEEL FOR STRUCTURAL ENGINEER'S REVIEW BEFORE FABRICATION.
4. HOLES IN STEEL SHALL BE 1/16" LARGER DIAMETER THAN NOMINAL SIZE OF BOLT USED, EXCEPT AS NOTED. COLUMN BASE PLATE HOLES MAY BE OVERSIZED PER AISC MANUAL OR AS NOTED.
5. ALL STRUCTURAL STEEL SURFACES THAT ARE ENCASED IN CONCRETE, MASONRY, OR SPRAY ON FIREPROOFING, OR ARE ENCASED BY BUILDING FINISH, SHALL BE LEFT UNPAINTED.
6. ALL STRUCTURAL STEEL AND MISCELLANEOUS METAL EXPOSED TO THE WEATHER SHALL BE HOT DIP GALVANIZED OR PAINTED AFTER FABRICATION, U.N.O.
7. GALVANIZING AT FIELD WELDS AND DAMAGE SHALL BE REPAIRED WITH A GALVANIZING REPAIR PAINT ACCORDING TO ASTM A780.
8. TIGHTEN HIGH STRENGTH BOLTS TO "SNUG-TIGHT" CONDITION PER AISC SPECIFICATION FOR STRUCTURAL JOINTS, U.N.O.
9. PROVIDE BEVELED WASHERS PER ANSI B18.23.1 AS REQUIRED ON SLOPED SURFACES.
21. GROUT OTHER SHALL BE NON-SHRINK, NON-METALLIC GROUT, MEETING ASTM C-1107, MIXED AND INSTALLED PER MANUFACTURER'S SPECIFICATIONS.
22. TIGHTEN ANCHOR BOLTS TO "SNUG TIGHT" CONDITION PER AISC SPECIFICATIONS, U.N.O.
23. WELDING:
24. ALL WELDS SHALL BE IN CONFORMITY WITH THE PROJECT SPECIFICATIONS AND AWS D1.1, SEE SPECIAL INSPECTION SECTION FOR WELDING INSPECTION REQUIREMENTS.
    a. ALL WELDING IS TO BE DONE BY CERTIFIED WELDERS USING E70XX ELECTRODES (U.N.O.).
    b. WELD LENGTHS CALLED FOR ON PLANS ARE THE NET EFFECTIVE LENGTH REQUIRED. WHERE FILLET WELD SYMBOL IS GIVEN WITHOUT INDICATION OF SIZE, USE MINIMUM SIZE WELDS AS SPECIFIED IN AISC 360.
    c. WELDS TERMINATING AT ENDS OR SIDES, WHERE PRACTICAL, SHALL BE RETURNED CONTINUOUSLY AROUND CORNERS A DISTANCE 2 TIMES THE NOMINAL SIZE OF THE WELD PER AISC 360 SECTION J2.2B, U.N.O.
    d. ALL FULL-PENETRATION FIELD WELDS SHALL BE ULTRASONICALLY TESTED.
    e. ALL TWO-SIDED FILLET WELDS SHOWN SHALL BE WELDED WITH THE SAME (GIVEN) WELD SIZE ON BOTH SIDES.
    f. ALL UNSIZED GROOVE OR BUTT WELDS SHOWN SHALL BE COMPLETE PENETRATION.
    g. ALL PROVISIONS OF AWS SHALL BE OBSERVED INCLUDING REQUIREMENTS FOR BACK-UP PLATES AND WELD TRANSITIONS WHETHER OR NOT THEY ARE SPECIFICALLY SHOWN.
    h. A WRITTEN WELDING PROCEDURE SPECIFICATION SHALL BE SUBMITTED TO THE TESTING LABORATORY. IT SHALL INCLUDE ALL WELDING PROCEDURES TO BE USED AS DESCRIBED IN AWS, CHAPTER 4.
    i. WHERE FIELD WELDING IS INDICATED, THE FIELD DESIGNATION IS GIVEN AS A RECOMMENDATION ONLY.

SHEET INDEX	
S100	GENERAL STRUCTURAL NOTES
S200	FRAMING PLAN & SCHEDULE
S210	FRAMING PLAN & SCHEDULE
S300	SECTION - 5X
S310	SECTION - 3X
S400	FOUNDATION & ANCHORAGE DETAILS
S500	STEEL DETAILS

SYSTEM HOST
800 North Humboldt Street
San Mateo, CA 94401

SYSTEM DEVELOPER
FOREFRONT POWER
100 Montgomery Street, Suite 725
San Francisco, CA 94104

GENERAL CONTRACTOR
COLLINS ELECTRICAL COMPANY INC.
1902 Channel Drive
West Sacramento, CA 95691
916-567-1100

ELECTRICAL ENGINEER
HARDIN-DAVIDSON ENGINEERING
HARDIN-DAVIDSON
356 Pollasky Avenue, Ste. 200
Clovis, CA 93612
559.323.4995

STRUCTURAL ENGINEERING AND STEEL CONSTRUCT
TEICHERT SOLAR
10620 Treena Street, Suite 140,
San Diego, CA 92131

ARCHITECT OF RECORD
M M P V d e s i g n
Mariana Moncada, Architect
718 West Arbor Drive
San Diego, CA 92103
619.632.2883

ARCHITECT / ENGINEER OF RECORD

PROJECT:
SAN MATEO COUNTY MEDICAL CENTER

222 W 39TH AVENUE
SAN MATEO, CA 94403

NO.	REVISION	DATE

DATE: 07.21.23

SHEET TITLE:
GENERAL STRUCTURAL NOTES

SHEET NO.:
S100

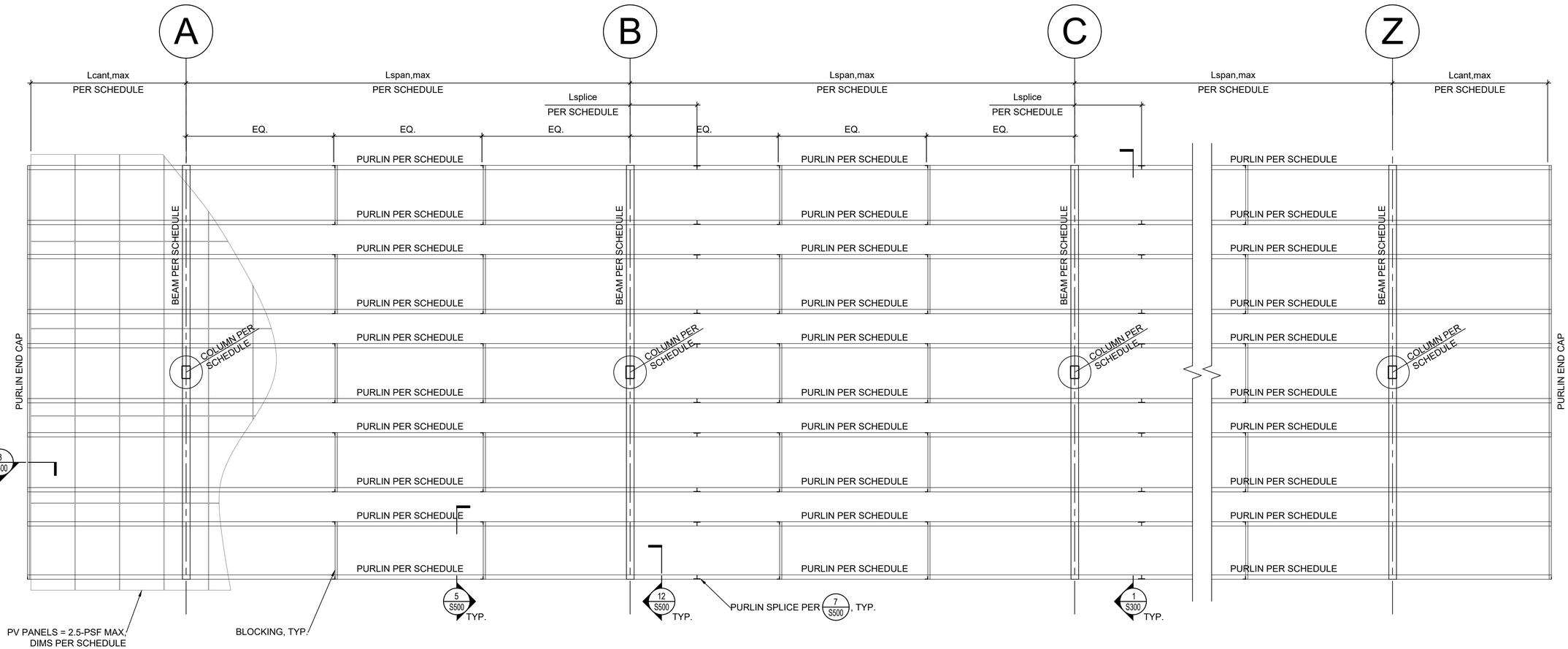

1 FRAMING PLAN

SCALE: ¼" = 1'-0"

MEMBER & DIMENSIONAL SCHEDULE												
ARRAY	ARRAY SIZE	# OF COLUMNS	COLUMN	BEAM	PURLIN	PANEL LENGTH	PANEL WIDTH	MAX SPAN LENGTH, Lspan	MAX CANT. LENGTH, Lcant	SPLICE LENGTH, Lsplice	MAX. COLUMN LENGTH	MIN. CLEARANCE
A	5x33	4	HSS12x8x½	W14X38	12X4X14GA	82.4"	40.9"	34'-6"	8'-7 1/4"	5'-1 13/16"	18'-0"	12'-0"
B	5x37	4	HSS12x8x½	W14X38	12X4X14GA	82.4"	40.9"	34'-6"	12'-0 5/8"	5'-1 13/16"	18'-0"	12'-0"
C	5x36	4	HSS12x8x½	W14X38	12X4X14GA	82.4"	40.9"	34'-6"	12'-0 5/8"	5'-1 13/16"	16'-0"	12'-0"
D, E	5x35	4	HSS12x8x½	W14X38	12X4X14GA	82.4"	40.9"	34'-6"	8'-7 1/4"	5'-1 13/16"	16'-0"	12'-0"
F	5x30	3	HSS12x8x½	W14X38	12X4X14GA	82.4"	40.9"	37'-9"	13'-11 3/4"	6'-10 9/16"	16'-0"	12'-0"

2 SCHEDULE

NO SCALE

SYSTEM HOST

800 North Humboldt Street
San Mateo, CA 94401

SYSTEM DEVELOPER

FOREFRONT POWER

100 Montgomery Street, Suite 725
San Francisco, CA 94104

GENERAL CONTRACTOR

COLLINS ELECTRICAL COMPANY INC.

1902 Channel Drive
West Sacramento, CA 95691
916-567-1100

ELECTRICAL ENGINEER

HARDIN-DAVIDSON ENGINEERING

HARDIN-DAVIDSON
356 Pollasky Avenue, Ste. 200
Clovis, CA 93612
559.323.4995

STRUCTURAL ENGINEERING AND STEEL CONSTRUCT

TEICHERT SOLAR

10620 Treena Street, Suite 140,
San Diego, CA 92131

ARCHITECT OF RECORD

M M P V d e s i g n

Mariana Moncada, Architect
718 West Arbor Drive
San Diego, CA 92103
619.632.2883

ARCHITECT / ENGINEER OF RECORD

PROJECT:

SAN MATEO COUNTY MEDICAL CENTER

222 W 39TH AVENUE
SAN MATEO, CA 94403

NO.	REVISION	DATE

DATE: 07.21.23

SHEET TITLE:

FRAMING PLAN & SCHEDULE

SHEET NO.:

S200

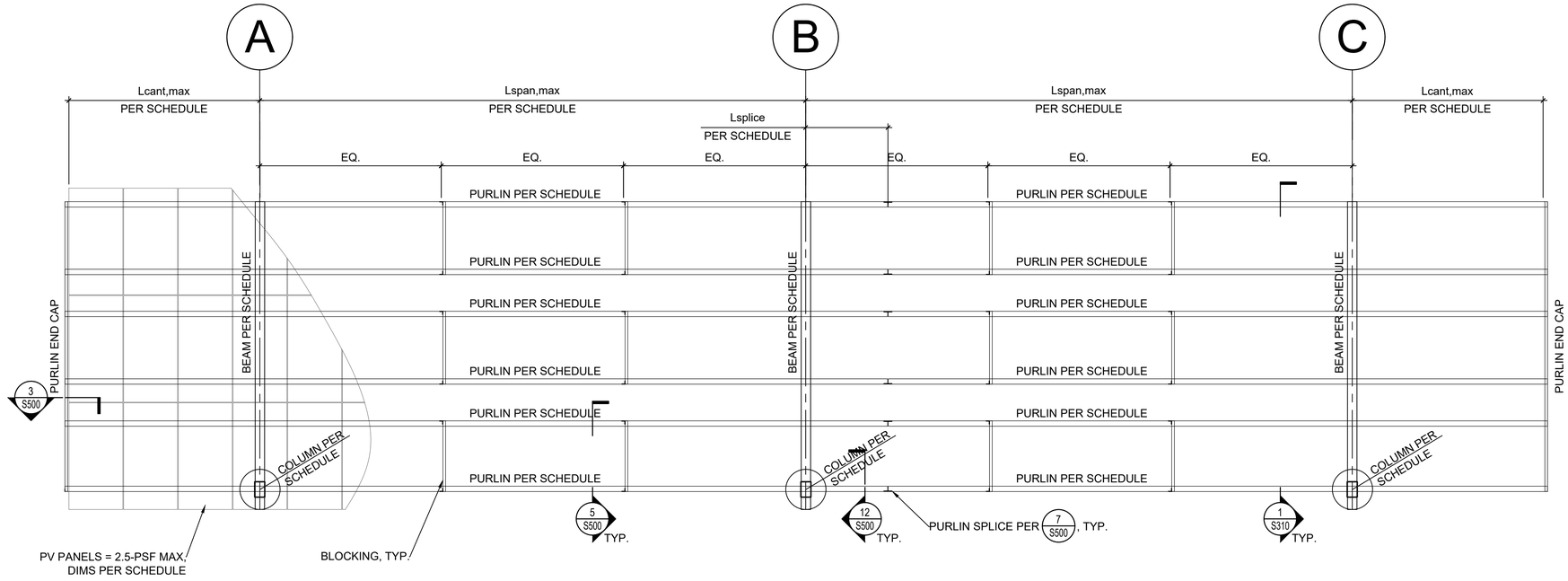

1 FRAMING PLAN

SCALE: ¼" = 1'-0"

MEMBER & DIMENSIONAL SCHEDULE												
ARRAY	ARRAY SIZE	# OF COLUMNS	COLUMN	BEAM	PURLIN	PANEL LENGTH	PANEL WIDTH	MAX SPAN LENGTH, Lspan	MAX CANT. LENGTH, Lcant	SPLICE LENGTH, Lsplice	MAX. COLUMN LENGTH	MIN. CLEARANCE
G	3x30	3	HSS12x8x½	W14X38	12X4X14GA	82.4"	40.9"	37'-9"	13'-11 3/4"	6'-10 9/16"	16'-0"	12'-0"

2 SCHEDULE

NO SCALE

SYSTEM HOST

800 North Humboldt Street
San Mateo, CA 94401

SYSTEM DEVELOPER

FOREFRONT POWER

100 Montgomery Street, Suite 725
San Francisco, CA 94104

GENERAL CONTRACTOR

COLLINS ELECTRICAL COMPANY INC.

1902 Channel Drive
West Sacramento, CA 95691
916-567-1100

ELECTRICAL ENGINEER

HARDIN-DAVIDSON
356 Pollasky Avenue, Ste. 200
Clovis, CA 93612
559.323.4995

STRUCTURAL ENGINEERING AND STEEL CONSTRUCT

TEICHERT SOLAR
10620 Treena Street, Suite 140,
San Diego, CA 92131

ARCHITECT OF RECORD

M M P V d e s i g n

Mariana Moncada, Architect
718 West Arbor Drive
San Diego, CA 92103
619.632.2883

ARCHITECT / ENGINEER OF RECORD

PROJECT:

SAN MATEO COUNTY MEDICAL CENTER

222 W 39TH AVENUE
SAN MATEO, CA 94403

NO.	REVISION	DATE

DATE: 07.21.23

SHEET TITLE:

FRAMING PLAN & SCHEDULE

SHEET NO.:

S210

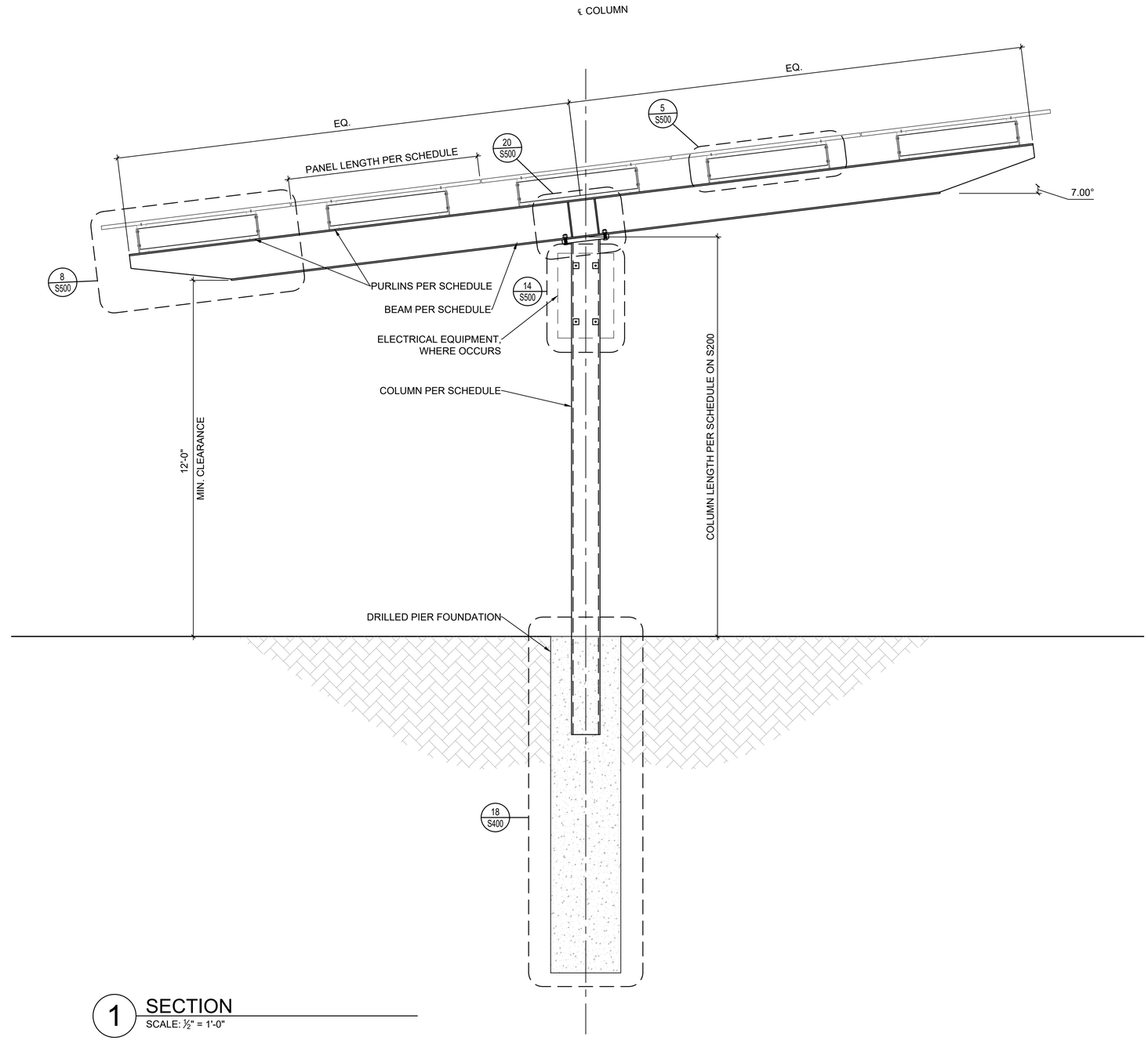

1 SECTION
SCALE: ½" = 1'-0"

SYSTEM HOST

800 North Humboldt Street
San Mateo, CA 94401

SYSTEM DEVELOPER

FOREFRONT POWER

100 Montgomery Street, Suite 725
San Francisco, CA 94104

GENERAL CONTRACTOR

COLLINS ELECTRICAL COMPANY INC.

1902 Channel Drive
West Sacramento, CA 95691
916-567-1100

ELECTRICAL ENGINEER

HARDIN-DAVIDSON ENGINEERING

HARDIN-DAVIDSON
356 Pollasky Avenue, Ste. 200
Clovis, CA 93612
559.323.4995

STRUCTURAL ENGINEERING AND STEEL CONSTRUCT

TEICHERT SOLAR

10620 Treena Street, Suite 140,
San Diego, CA 92131

ARCHITECT OF RECORD

M M P V d e s i g n

Mariana Moncada, Architect
718 West Arbor Drive
San Diego, CA 92103
619.632.2883

ARCHITECT / ENGINEER OF RECORD

PROJECT:

SAN MATEO COUNTY MEDICAL CENTER

222 W 39TH AVENUE
SAN MATEO, CA 94403

NO.	REVISION	DATE

DATE: 07.21.23

SHEET TITLE:

SECTION - 5X

SHEET NO.:

S300

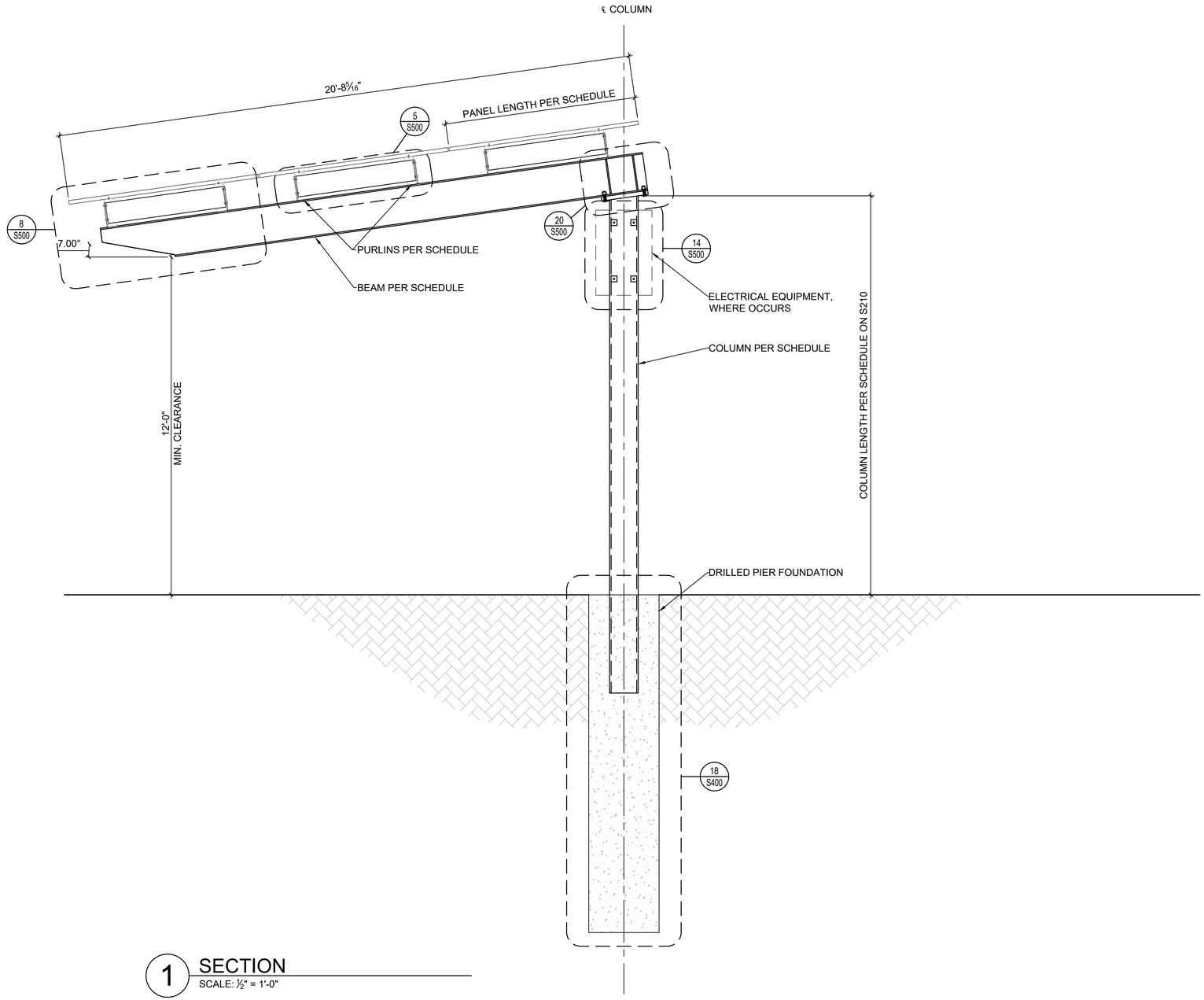

1 SECTION
SCALE: ½" = 1'-0"

SYSTEM HOST

800 North Humboldt Street
San Mateo, CA 94401

SYSTEM DEVELOPER

FOREFRONT POWER
100 Montgomery Street, Suite 725
San Francisco, CA 94104

GENERAL CONTRACTOR

COLLINS ELECTRICAL COMPANY INC.
1902 Channel Drive
West Sacramento, CA 95691
916-567-1100

ELECTRICAL ENGINEER

HARDIN-DAVIDSON ENGINEERING
HARDIN-DAVIDSON
356 Pollasky Avenue, Ste. 200
Clovis, CA 93612
559.323.4995

STRUCTURAL ENGINEERING AND STEEL CONSTRUCT

TEICHERT SOLAR
10620 Treena Street, Suite 140,
San Diego, CA 92131

ARCHITECT OF RECORD

M M P V d e s i g n

Mariana Moncada, Architect
718 West Arbor Drive
San Diego, CA 92103
619.632.2883

ARCHITECT / ENGINEER OF RECORD

PROJECT:

SAN MATEO COUNTY MEDICAL CENTER

222 W 39TH AVENUE
SAN MATEO, CA 94403

NO.	REVISION	DATE

DATE: 07.21.23

SHEET TITLE:

SECTION - 3X

SHEET NO.:

S310

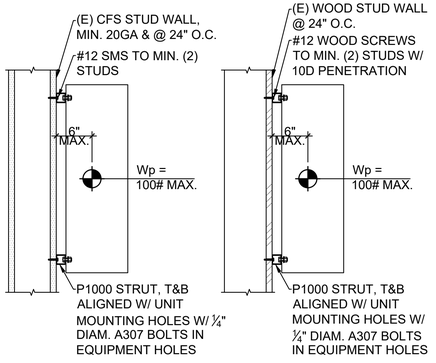

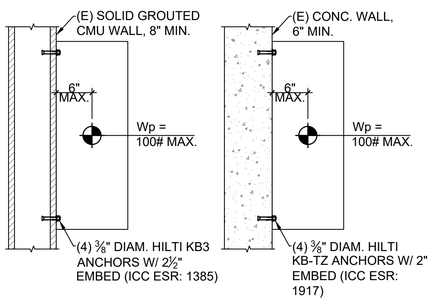

12 WALL MOUNTED EQUIPMENT
SCALE: ½" = 1'-0"

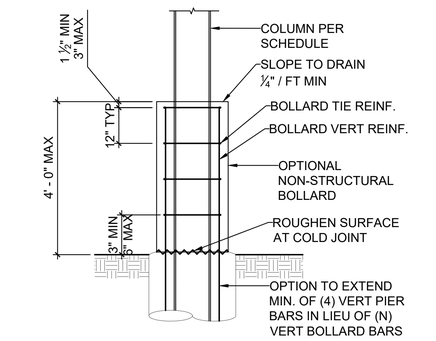

17 BOLLARD - EMBEDDED CLMN.
SCALE: ½" = 1'-0"

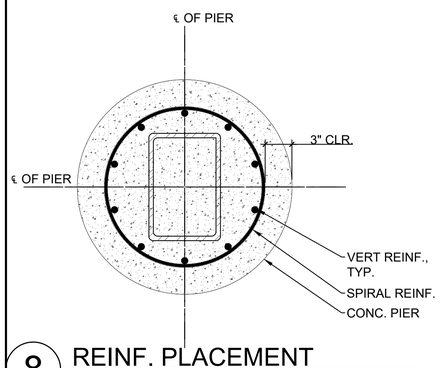

8 REINF. PLACEMENT
SCALE: 3" = 1'-0"

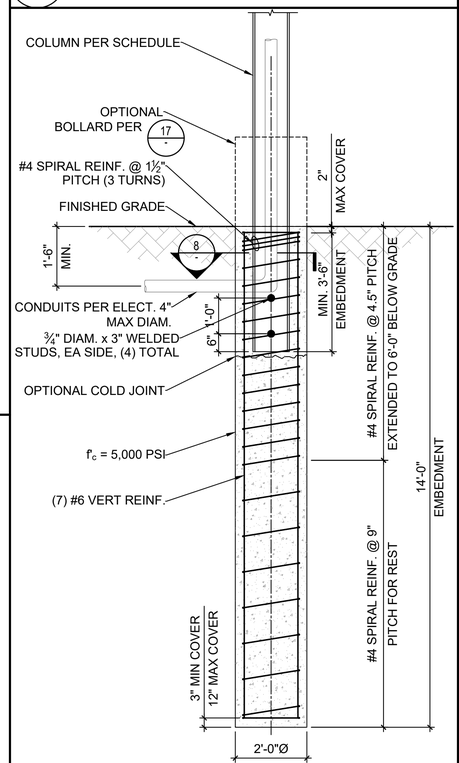

18 PIER FOUNDATION
SCALE: ½" = 1'-0"

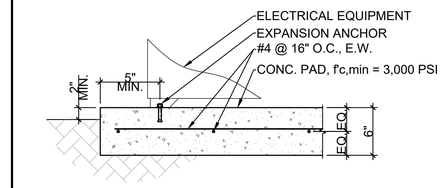

9 EQUIPMENT PAD
SCALE: 1" = 1'-0"

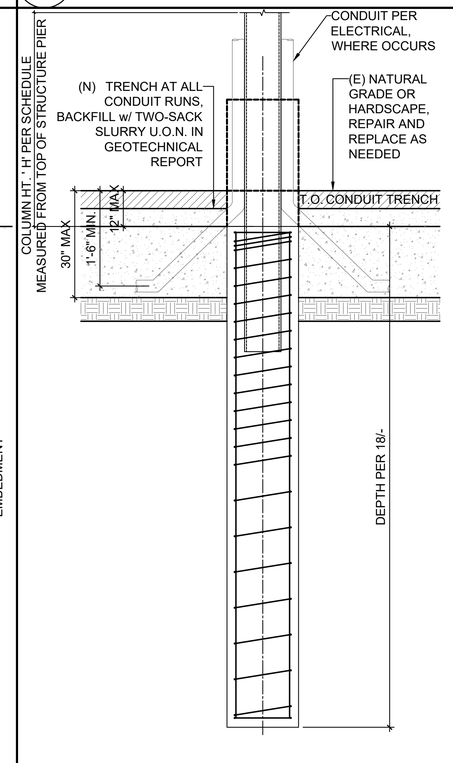

19 CONDUIT ROUTING
SCALE: ½" = 1'-0"

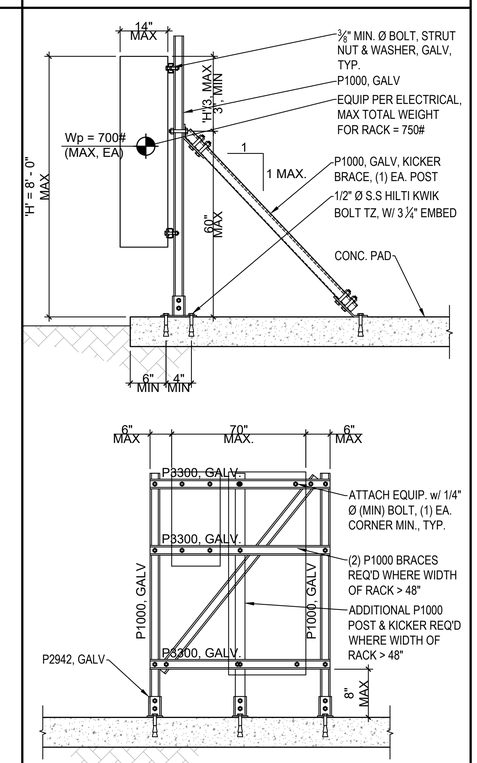

20 EQUIPMENT RACK
SCALE: 1" = 1'-0"

SYSTEM HOST

COUNTY OF SAN MATEO CALIFORNIA

800 North Humboldt Street
San Mateo, CA 94401

SYSTEM DEVELOPER

FOREFRONT POWER

100 Montgomery Street, Suite 725
San Francisco, CA 94104

GENERAL CONTRACTOR

COLLINS ELECTRICAL COMPANY INC.

1902 Channel Drive
West Sacramento, CA 95691
916-567-1100

ELECTRICAL ENGINEER

HARDIN-DAVIDSON ENGINEERING

HARDIN-DAVIDSON
356 Pollasky Avenue, Ste. 200
Clovis, CA 93612
559.323.4995

STRUCTURAL ENGINEERING AND STEEL CONSTRUCT

TEICHERT SOLAR

10620 Treena Street, Suite 140,
San Diego, CA 92131

ARCHITECT OF RECORD

M M P V d e s i g n

Mariana Moncada, Architect
718 West Arbor Drive
San Diego, CA 92103
619.632.2883

ARCHITECT / ENGINEER OF RECORD

PROJECT:

SAN MATEO COUNTY MEDICAL CENTER

222 W 39TH AVENUE
SAN MATEO, CA 94403

NO.	REVISION	DATE

DATE:

07.21.23

SHEET TITLE:

FOUNDATION & ANCHORAGE DETAILS

SHEET NO.:

S400

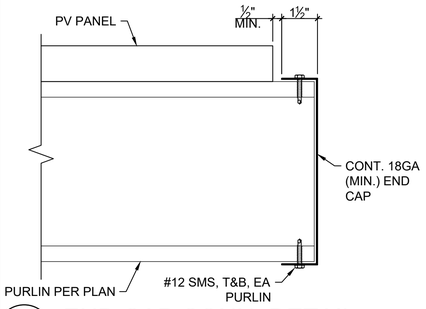

3 END CAP CONN. DETAIL
SCALE: 3" = 1'-0"

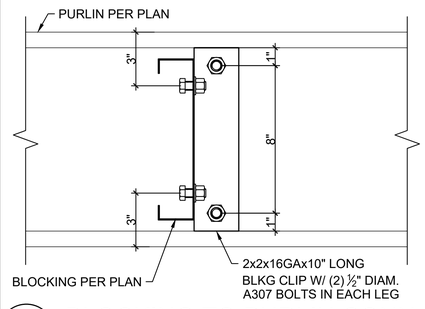

4 BLOCKING TO PURLIN CONN.
SCALE: 3" = 1'-0"

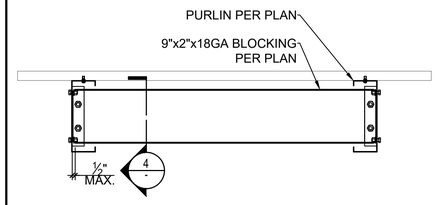

5 PURLIN BLOCKING
SCALE: ½" = 1'-0"

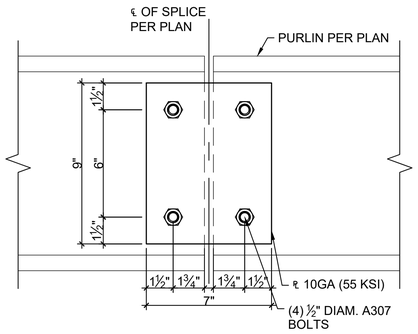

7 PURLIN SPLICE
SCALE: 3" = 1'-0"

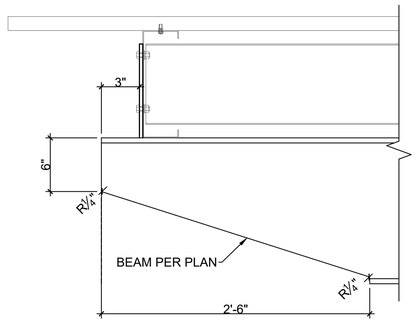

8 BEAM END DETAIL
SCALE: 1½" = 1'-0"

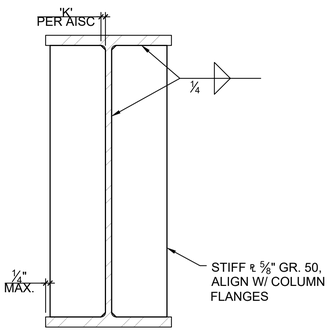

10 STIFFENER PLATE
SCALE: 3" = 1'-0"

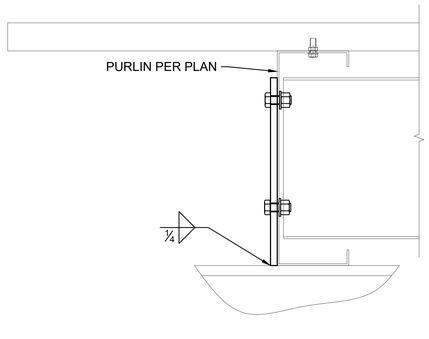

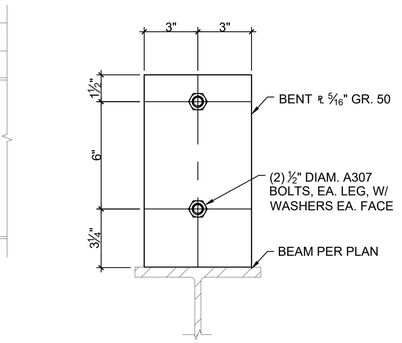

12 BEAM TO PURLIN CONN.
SCALE: 3" = 1'-0"

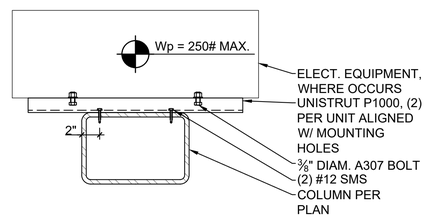

14 EQUIPMENT MOUNTING
SCALE: 1½" = 1'-0"

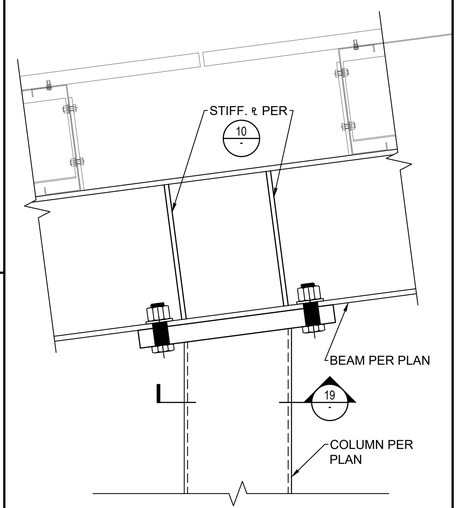

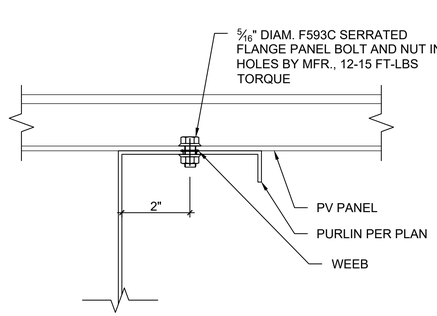

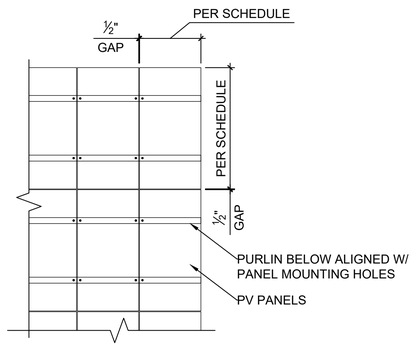

17 PV PANEL ATTACHMENT
SCALE: 6" = 1'-0"

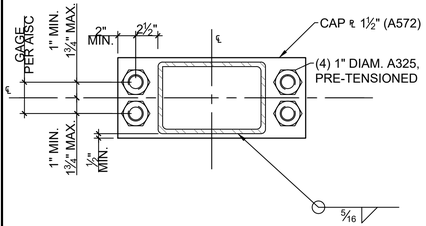

19 CAP PLATE
SCALE: 1½" = 1'-0"

20 BEAM TO COLUMN CONN.
SCALE: 1½" = 1'-0"

SYSTEM HOST

800 North Humboldt Street
San Mateo, CA 94401

SYSTEM DEVELOPER

FOREFRONT POWER

100 Montgomery Street, Suite 725
San Francisco, CA 94104

GENERAL CONTRACTOR

COLLINS ELECTRICAL COMPANY INC.

1902 Channel Drive
West Sacramento, CA 95691
916-567-1100

ELECTRICAL ENGINEER

HARDIN-DAVIDSON ENGINEERING

HARDIN-DAVIDSON
356 Pollasky Avenue, Ste. 200
Clovis, CA 93612
559.323.4995

STRUCTURAL ENGINEERING AND STEEL CONSTRUCT

TEICHERT SOLAR

10620 Treena Street, Suite 140,
San Diego, CA 92131

ARCHITECT OF RECORD

M M P V d e s i g n

Mariana Moncada, Architect
718 West Arbor Drive
San Diego, CA 92103
619.632.2883

ARCHITECT / ENGINEER OF RECORD

PROJECT:

SAN MATEO COUNTY MEDICAL CENTER

222 W 39TH AVENUE
SAN MATEO, CA 94403

NO.	REVISION	DATE

DATE: 07.21.23

SHEET TITLE:

STEEL DETAILS

SHEET NO.:

S500

Site Design Criteria - Flat Roof PV System Basis of Design	
Roof Live Load (psf)	20(see footnote 1)
Ground Snow Pg (psf)	0
Flat Roof Snow Pf (psf)	0
Snow Importance Factor (Is)	1.1
Wind Design Data	
Basic Wind Speed (mph)	98
Risk Category	III
Wind Exposure	B
Earthquake Design Data	
Risk Category	III
Importance Factor (Ie)	1.25
Component Importance Factor (Ip)	1.0
Mapped Acceleration Parameter (Ss)	1.936
Mapped Acceleration Parameter(S1)	0.796
Seismic Site Class	D
Design Spectral Acceleration Parameter (Sds)	1.549
Design Spectral Acceleration Parameter (Sd1)	0.902
Seismic Design Category (SDC)	E
Basic seismic-force-resisting system(s)	roof anchors
Base Design Shear = Fp x W	0.74 W
Response Modification Factor (R)	2.5
Analysis Procedure	ASCE 7 sec. 13.3/4
Design Code (with local amendments)	2022 CBC
-	ASCE 7 - 16
ALTERNATE DESIGN METHOD	
-	SEAOC PV2

1. Roof Live Load only applicable to areas not covered by PV modules. Reference SEAOC Design Guidelines

GENERAL NOTES:

1. ALL SITE, PROJECT, AND BUILDING DETAILS ARE PROVIDED BY CUSTOMER OR GENERATED VIA SATELLITE IMAGERY FROM INFORMATION PROVIDED BY CUSTOMER. PANELCLAW IS NOT RESPONSIBLE FOR SITE INACCURACIES THAT COULD LEAD TO CHANGES TO THESE DRAWING DETAILS AND ARRAY LAYOUT CONFIGURATIONS. ALL INFORMATION CONTAINED WITHIN THESE DOCUMENTS ARE TO BE FIELD VERIFIED BY CUSTOMER AND INSTALLER. ANY CHANGES OR MODIFICATIONS TO THESE DOCUMENTS, CONTAINED INFORMATION, OR FINAL ARRAY AND MOUNTING SYSTEM INSTALLATIONS MUST BE SUBMITTED TO PANELCLAW AND OTHER PROJECT AUTHORITIES FOR APPROVAL.
2. REFER TO AND FOLLOW THE APPROPRIATE PANELCLAW INSTALLATION MANUALS AND PROCEDURES DURING THE INSTALLATION PROCESS. NOT FOLLOWING SUCH PROCEDURES AND METHODS COULD RESULT IN DAMAGE TO THE COMPONENTS OR MAY VOID THE PRODUCT WARRANTY.
3. ARRAY SETBACKS: ALL ARRAYS ARE REQUIRED TO BE SETBACK 4-FEET FROM ALL ROOF EDGES UNLESS OTHERWISE SPECIFIED AND CALLED OUT ON THE ARRAY DIAGRAMS ON THIS PAGE OR ON ADDITIONAL ARRAY BALLAST PAGES
4. REFER TO THE SPECIFIC ARRAY BALLAST SHEETS FOR BALLASTING REQUIREMENTS BASED ON THE PROVIDED SITE INFORMATION
5. SYSTEM PSF INCLUDES ALL PANELCLAW RACKING COMPONENTS, MECHANICAL ATTACHMENTS (IF APPLICABLE), PV MODULE AND BALLAST BLOCKS. FOR MAXIMUM SYSTEM POINT LOAD SUMMARY (PLS), REFER TO CALCULATIONS.
6. PANELCLAW AND/OR PANELCLAW CONSULTING ENGINEERS ARE NOT RESPONSIBLE FOR DETERMINING THE ADEQUACY OF THE STRUCTURE TO SUPPORT LOADS IMPOSED BY THE ARRAY AND MOUNTING SYSTEM. SUPPORT STRUCTURE TO BE CHECKED BY OTHERS
7. ALWAYS ALLOW 6" CLEARANCE BETWEEN NEIGHBORING SUBARRAYS, 6" BETWEEN SUBARRAYS AND ALL FIXED ROOF OBJECTS AND 4' BETWEEN SUBARRAYS AND ROOF EDGES. REFER TO LOCAL FIRE CODES AND ELECTRICAL CODES FOR ADDITIONAL REQUIREMENTS WHICH MAY GOVERN DESIGN. SUBARRAYS THAT USE A SEISMIC ANALYSIS METHOD OF DELTA MPV PER SEAOC OR ASCE 7-16 HAVE THEIR OWN CLEARANCE REQUIREMENTS. REFER TO THE BALLAST LAYOUT SHEETS WITHIN THIS DOCUMENT FOR DETAILS.
8. BALLAST BLOCK DIMENSIONS MUST CONFORM TO THE FOLLOWING SPECIFICATIONS: 3-3/4" THICK MAX., 7-5/8" ± 1/8" WIDTH, 15-5/8" ± 1/8" LENGTH.
9. IF AN ARRAY CLEARANCES TABLE APPEARS BELOW ON THIS PAGE, THE DESIGN UTILIZES THIRD PARTY SEISMIC NON-LINEAR RESPONSE ANALYSIS TO ESTIMATE MAXIMUM ARRAY SEISMIC DISPLACEMENT. THE PREDICTED MOVEMENT IS ONLY AN ESTIMATE. PANELCLAW IS NOT RESPONSIBLE OR LIABLE FOR ANY DAMAGES OR COSTS ASSOCIATED WITH PV ARRAY MOVEMENT INCLUDING MOVEMENT IN EXCESS OF THE CLEARANCES NOTED IN THIS DOCUMENT OR ANY REQUIREMENT TO REPOSITION THE ARRAYS IF MOVEMENT OCCURS.
10. DEFLECTORS MUST BE INSTALLED WHEN WINDS ARE EXPECTED TO EXCEED APPROX. 25% OF WIND SPEED DOCUMENTED IN SITE DESIGN CRITERIA TABLE. DEFLECTORS ARE REQUIRED ON ALL MODULES UNLESS OTHERWISE NOTED ON BALLAST LAYOUT PAGES.

SHEET INDEX

NO.	DESCRIPTION
PC-1	COVER SHEET
PC-2	PROJECT SUMMARY
PC-3	ARRAY SITE MAP
PC-4	TYPICAL ARRAY DIMENSIONS
PC-5	ASSEMBLIES
PC-6	RACKING COMPONENTS
PC-7	BALLAST LEGEND
PC-8 TO PC-9	BALLAST LAYOUT - 1 TO 2
PC-10	MECHANICAL ATTACHMENT DETAIL

NOT APPROVED FOR CONSTRUCTION

STAMP:

PANELCLAW®

RACKING CONSTRUCTION SET

1600 OSGOOD ST. SUITE 2023
NORTH ANDOVER, MA 01845
TEL: 978.688.4900
www.panelclaw.com

© PANELCLAW, INC
ALL INFORMATION CONTAINED WITHIN THIS DOCUMENT IS PROPERTY OF PANELCLAW, INC. THE PURPOSE OF THIS DOCUMENT IS TO FACILITATE THE INSTALLATION OF PANELCLAW SOLAR PHOTOVOLTAIC MOUNTING SYSTEMS. DO NOT COPY OR DISTRIBUTE WITHOUT PERMISSION.

REV	DESCRIPTION	PREP	CHECK	DATE
0	Initial Ballast Map Layout	DH		2023-06-19

SCALE:
0" 1/2" 1" 2"
ORIGINAL SIZE 36"X24"
SHEET SIZE ARCH "D"

PREPARED FOR:
Collins Electrical Company

PROJECT:
San Mateo Medical Center

LOCATION:
222 W 39th Ave, San Mateo, CA 94403, USA

SHEET TITLE:
COVER SHEET

REVISION: 0

SHEET: PC-1

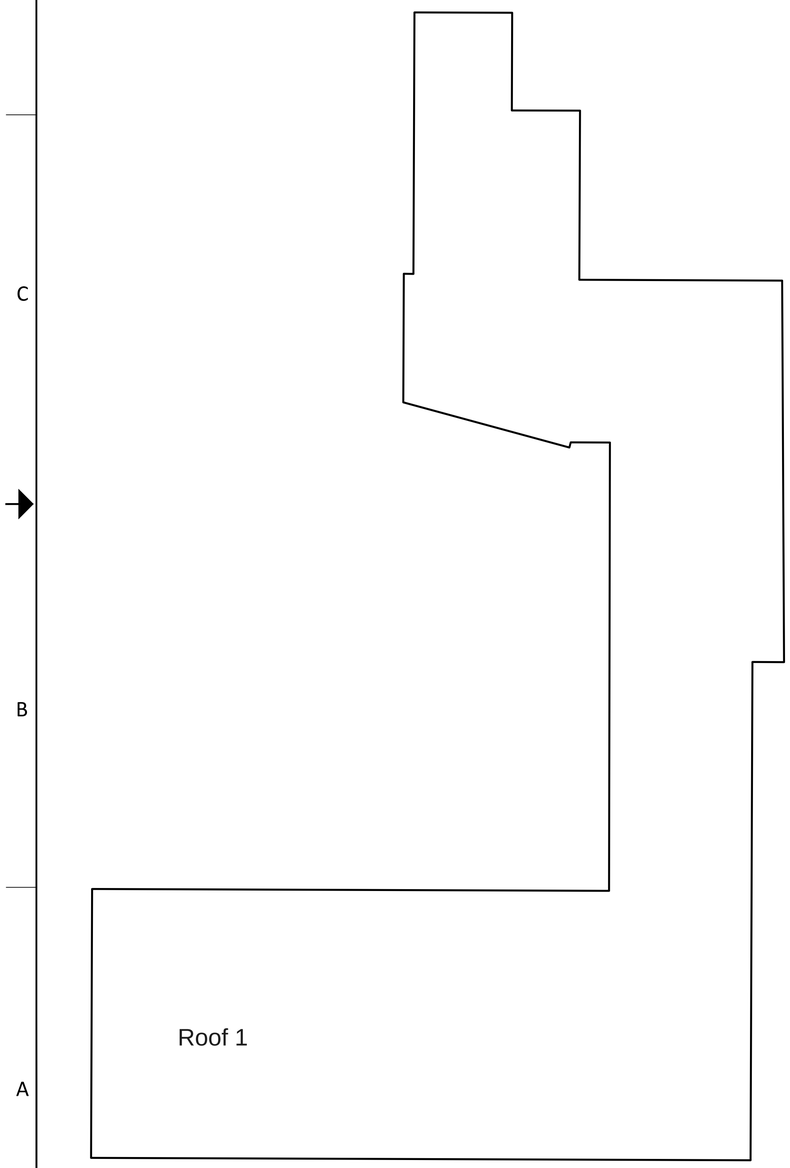

SITE MAP

SCALE: NTS

A
PC-2

PROJECT SUMMARY	
MODULE TYPE	LONGI SOLAR LR4-72HPH-455M
MODULE DIMENSIONS (IN.)	82.44 X 40.87 X 1.38
NUMBER OF MODULES	281
MODULE WATTAGE (W STC)	455
SYSTEM SIZE (kW STC)	127.855
SYSTEM WEIGHT (LB)	36138
SYSTEM AREA (SQ FT.)	8740
AGGREGATE SYSTEM LOAD (PSF)	4.14
NUMBER OF ARRAYS	2
ARRAY TILT (DEG)	9.82

clawFR 10 Degree - 35 cm		
PROJECT PART QUANTITY		
ITEM	PART NUMBER	QTY
Base	500050203	616
BASE, 03, CFR		
Module Connector	500050702	562
MODULE CONNECTOR, 1070, 10D, CFR		
Rail	2000695	752
RAIL, CFR		
Cam	5000500	562
CAM, 10D, CFR		
Cam Claw	2000673	562
CAM CLAW, CFR		
Deflector	200088703	281
DEFLECTOR, 10D, 2100, CFR		
Bolt	2000697	2829
BLT, HEX FLG, TRI, M6X16, GR8.8, PATCH		
Base Pad	2000678	0
PAD, BASE, CFR		
CONCRETE MASONRY UNIT	N/A	509
BLOCK, CONCRETE, 32.6 LB. - Xin x 8in x 16in NOMINAL, PARTNER SUPPLIED, SEE INSTALLATION MANUAL		

MECHANICAL ATTACHMENT PART QUANTITY		
MA Hardware Kit	5000423	12
HW KIT, MA STRUT, 2500, CFR		
MA Strut	2000830	115
MA STRUT, CFR		
Mechanical Attachment	TBD	115
To Be Determined (Facet)		
TOTAL MECHANICAL ATTACHMENT COUNT		115

NOT APPROVED FOR CONSTRUCTION

STAMP:

PANELCLAW®

RACKING CONSTRUCTION SET

1600 OSGOOD ST. SUITE 2023
NORTH ANDOVER, MA 01845
TEL: 978.688.4900
www.panelclaw.com

© PANELCLAW, INC
ALL INFORMATION CONTAINED WITHIN THIS DOCUMENT IS PROPERTY OF PANELCLAW, INC. THE PURPOSE OF THIS DOCUMENT IS TO FACILITATE THE INSTALLATION OF PANELCLAW SOLAR PHOTOVOLTAIC MOUNTING SYSTEMS. DO NOT COPY OR DISTRIBUTE WITHOUT PERMISSION.

REV	DESCRIPTION	DATE	PREP	CHECK
0	Initial Ballast Map Layout	2023-06-19	DH	

SCALE:

0" 1/2" 1" 2"

ORIGINAL SIZE 36"X24"
SHEET SIZE ARCH "D"

PREPARED FOR:

Collins Electrical Company

PROJECT:

San Mateo Medical Center

LOCATION:

222 W 39th Ave, San Mateo, CA 94403, USA

SHEET TITLE:

PROJECT SUMMARY

REVISION: 0

SHEET: PC-2

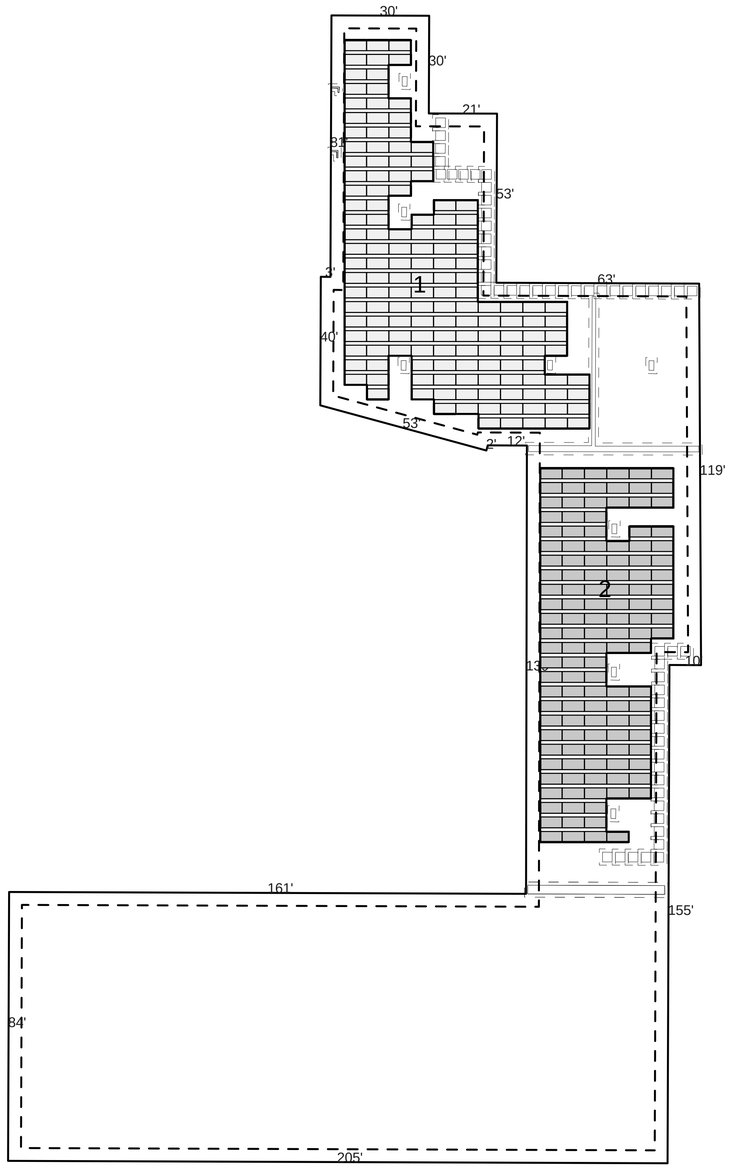

ARRAY SITE MAP

SCALE: NTS

A
PC- 3

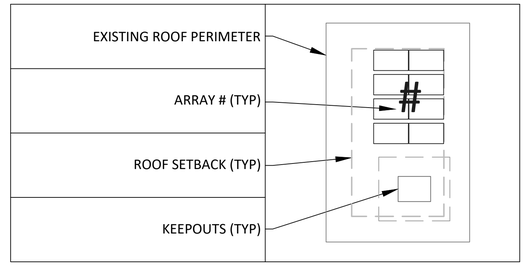

ROOF NAME	ROOF SETBACK (FT.)	ROOF HEIGHT (FT)	PARAPET HEIGHT (FT)	ROOF TILT (DEG)
Roof 1	4.00	45.00	4.5	1

KEEPOUT NAME	KEEPOUT CLEARANCE (FT.)	KEEPOUT HEIGHT (IN.)
Group 1	1	24
Group 2	1	72
Group 3	1	12

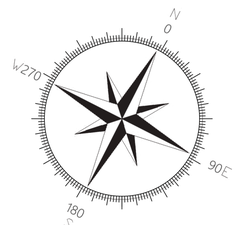

NOTES:

1. ALL DIMENSIONS SHOWN ARE BASED UPON INFORMATION PROVIDED TO PANELCLAW. FIELD VERIFY ALL DIMENSIONS PRIOR TO CONSTRUCTION OF THE SOLAR ARRAY. NOTIFY PANELCLAW OF ANY DISCREPANCIES.

NOT APPROVED FOR CONSTRUCTION

STAMP:

PANELCLAW®

RACKING CONSTRUCTION SET

1600 OSGOOD ST. SUITE 2023
NORTH ANDOVER, MA 01845
TEL: 978.688.4900
www.panelclaw.com

© PANELCLAW, INC
ALL INFORMATION CONTAINED WITHIN THIS DOCUMENT IS PROPERTY OF PANELCLAW, INC. THE PURPOSE OF THIS DOCUMENT IS TO FACILITATE THE INSTALLATION OF PANELCLAW SOLAR PHOTOVOLTAIC MOUNTING SYSTEMS. DO NOT COPY OR DISTRIBUTE WITHOUT PERMISSION.

REV	DESCRIPTION	PREP	CHECK	DATE
0	Initial Ballast Map Layout	DH		2023-06-19

SCALE:

0" 1/2" 1" 2"

ORIGINAL SIZE 36"X24"
SHEET SIZE ARCH "D"

PREPARED FOR:

Collins Electrical Company

PROJECT:

San Mateo Medical Center

LOCATION:

222 W 39th Ave, San Mateo, CA 94403, USA

SHEET TITLE:

ARRAY SITE MAP

REVISION: 0

SHEET: PC-3

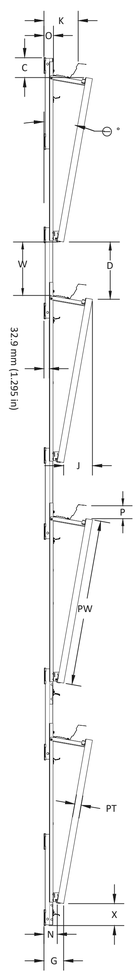

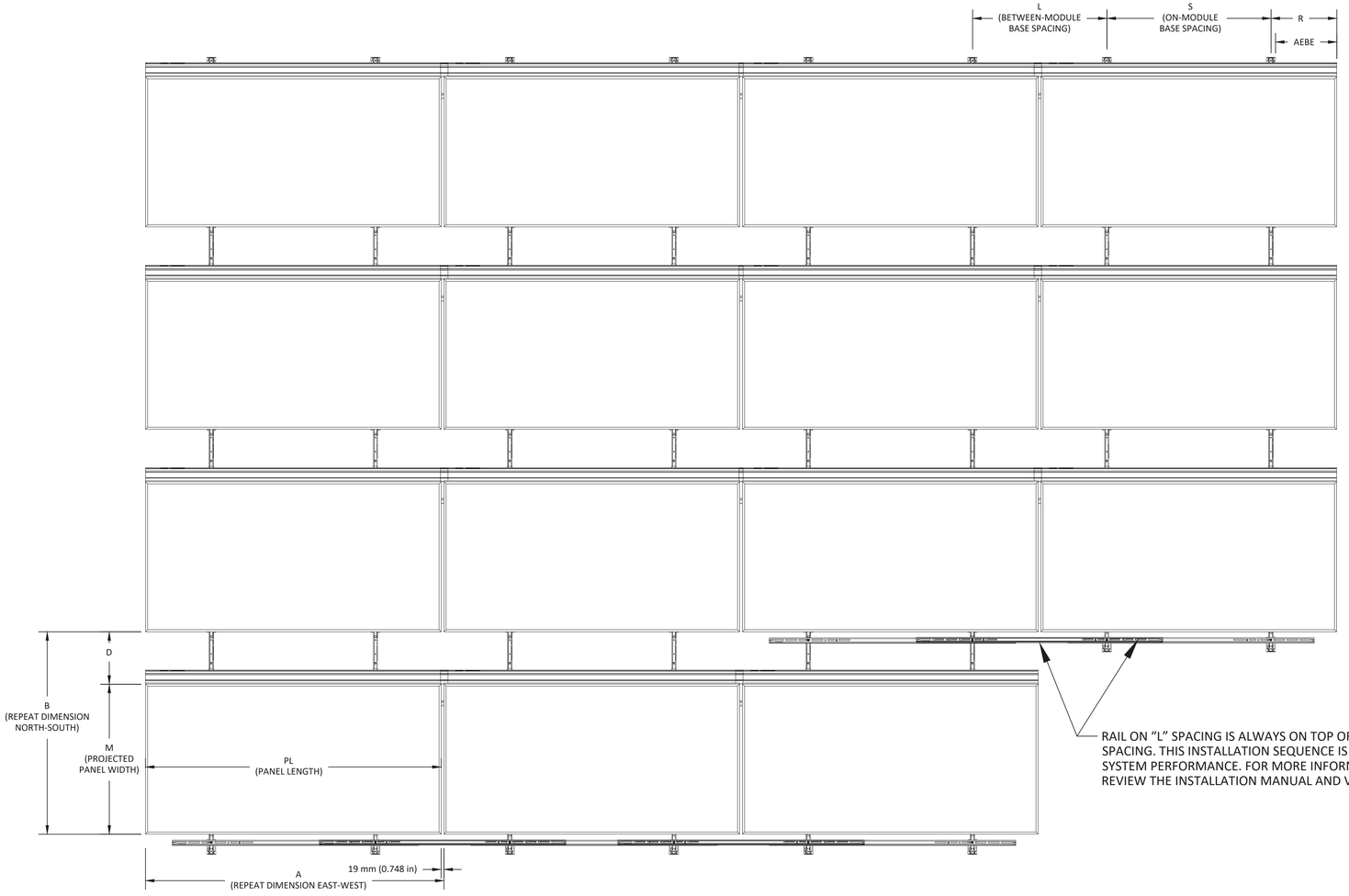

RAIL ON "L" SPACING IS ALWAYS ON TOP OF RAIL ON "S" SPACING. THIS INSTALLATION SEQUENCE IS CRITICAL TO SYSTEM PERFORMANCE. FOR MORE INFORMATION REVIEW THE INSTALLATION MANUAL AND VIDEOS.

ARRAY CROSS SECTION VIEW — A — PC-4

SCALE: NTS

ARRAY TOP VIEW — B — PC-4

SCALE: NTS

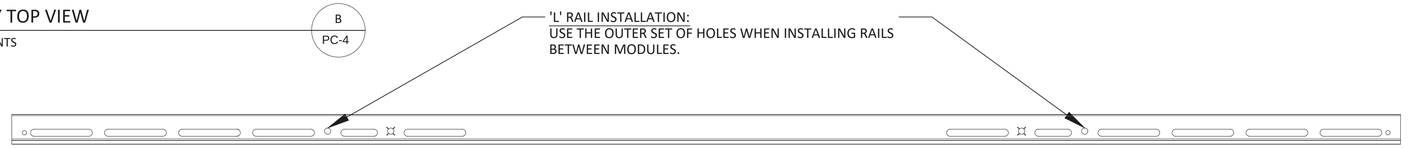

RAIL DETAIL — C — PC-4

SCALE: NTS

INSTALLATION MEASUREMENTS					
		AEBE	S	L	CAM SPACING*
UNITS	mm	410	1213	900	46
	inches	16 3/16	47 3/4	35 7/16	1 13/16
*CAM SPACING SHOWN ON ASSEMBLIES PAGE.					

MODULE DIMENSIONS				
		PL	PW	PT
UNITS	mm	2094	1038	35
	inches	82.44	40.87	1.38

INSTALLED ARRAY DIMENSIONS																		
		A	B	C	D	G	J	K	M	N	O	P	R	W	X	Theta (DEG)	D/J (#:1)	G.C.R.*
UNITS	mm	2113	1377	123	354	116	177	211	1023	82	61	87	440	338	136	9.82	2.00	0.75
	inches	83.19	54.20	4.84	13.93	4.57	6.97	8.30	40.27	3.21	2.39	3.42	17 5/16	13.31	5.35	9.82	2.00	0.75

* G.C.R = (PW) / B

NOT APPROVED FOR CONSTRUCTION

STAMP:

PANELCLAW®

RACKING CONSTRUCTION SET

1600 OSGOOD ST. SUITE 2023
NORTH ANDOVER, MA 01845
TEL: 978.688.4900
www.panelclaw.com

© PANELCLAW, INC
ALL INFORMATION CONTAINED WITHIN THIS DOCUMENT IS PROPERTY OF PANELCLAW, INC. THE PURPOSE OF THIS DOCUMENT IS TO FACILITATE THE INSTALLATION OF PANELCLAW SOLAR PHOTOVOLTAIC MOUNTING SYSTEMS. DO NOT COPY OR DISTRIBUTE WITHOUT PERMISSION.

REV	DESCRIPTION	PREP	CHECK	DATE
0	Initial Ballast Map Layout	DH		2023-06-19

SCALE:

0" 1/2" 1" 2"

ORIGINAL SIZE 36"X24"
SHEET SIZE ARCH "D"

PREPARED FOR:

Collins Electrical Company

PROJECT:

San Mateo Medical Center

LOCATION:

222 W 39th Ave, San Mateo, CA 94403, USA

SHEET TITLE:

TYPICAL ARRAY DIMENSIONS

REVISION: 0

SHEET: PC-4

		CAM SPACING
UNITS	mm	46
	inches	1 13/16

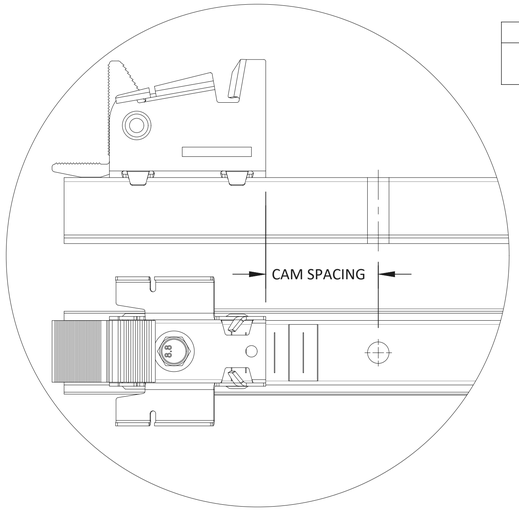

CAM SPACING DETAIL — A PC-5

SCALE: NTS

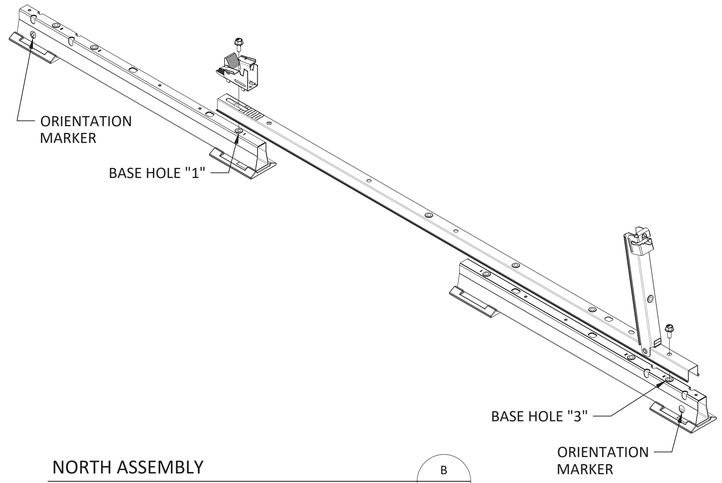

NORTH ASSEMBLY — B PC-5

SCALE: NTS

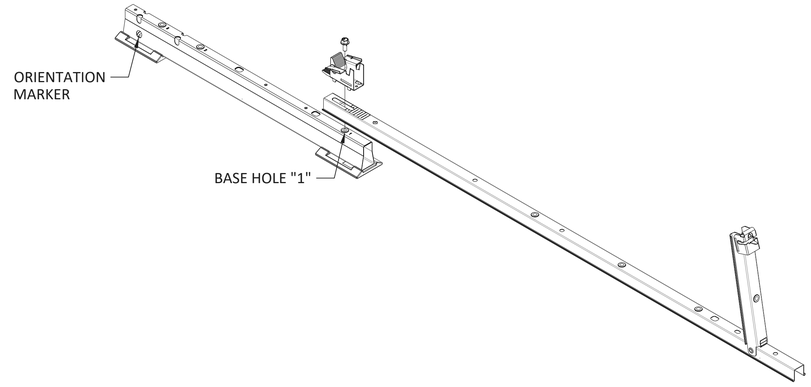

MIDDLE ASSEMBLY — C PC-5

SCALE: NTS

STANDARD ASSEMBLY QUANTITY	
NORTH ASSEMBLY	52
SOUTH ASSEMBLY	52
MIDDLE ASSEMBLY	456
NORTH SOUTH ASSEMBLY	2
NOTE: ASSEMBLIES IN THIS TABLE USE THE STANDARD 2-PAD BASE	

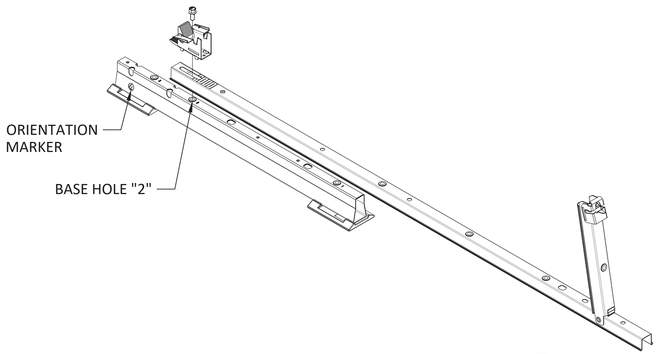

SOUTH ASSEMBLY — D PC-5

SCALE: NTS

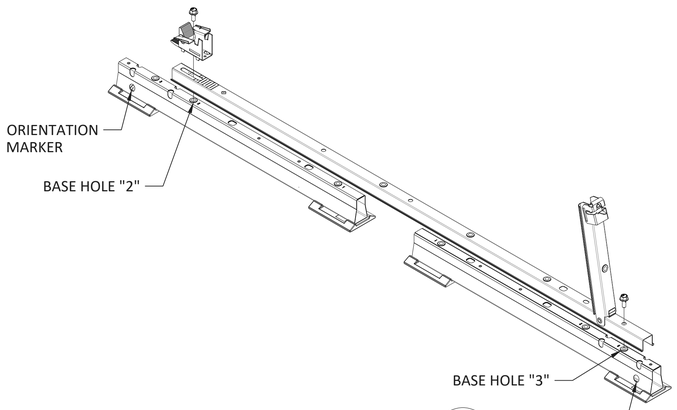

NORTH SOUTH ASSEMBLY — E PC-5

SCALE: NTS

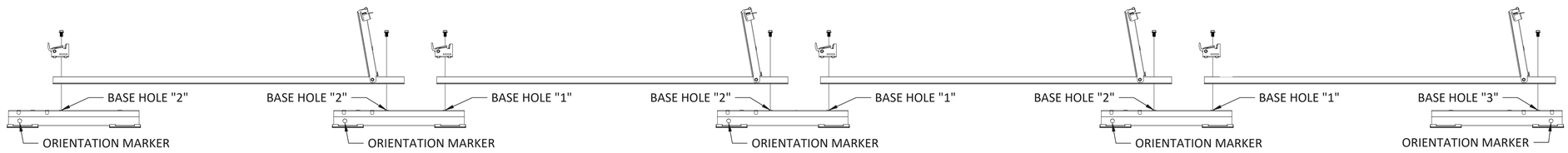

EXAMPLE ARRAY CONSTRUCTION — F PC-5

SCALE: NTS

NOT APPROVED FOR CONSTRUCTION

STAMP:

PANELCLAW®

RACKING CONSTRUCTION SET

1600 OSGOOD ST. SUITE 2023
NORTH ANDOVER, MA 01845
TEL: 978.688.4900
www.panelclaw.com

© PANELCLAW, INC
ALL INFORMATION CONTAINED WITHIN THIS DOCUMENT IS PROPERTY OF PANELCLAW, INC. THE PURPOSE OF THIS DOCUMENT IS TO FACILITATE THE INSTALLATION OF PANELCLAW SOLAR PHOTOVOLTAIC MOUNTING SYSTEMS. DO NOT COPY OR DISTRIBUTE WITHOUT PERMISSION.

REV	DESCRIPTION	PREP	CHECK	DATE
0	Initial Ballast Map Layout	DH		2023-06-19

SCALE: 0" 1/2" 1" 2"

ORIGINAL SIZE 36"X24"
SHEET SIZE ARCH "D"

PREPARED FOR:

Collins Electrical Company

PROJECT:

San Mateo Medical Center

LOCATION:

222 W 39th Ave, San Mateo, CA 94403, USA

SHEET TITLE:

ASSEMBLIES

REVISION: 0

SHEET: PC-5

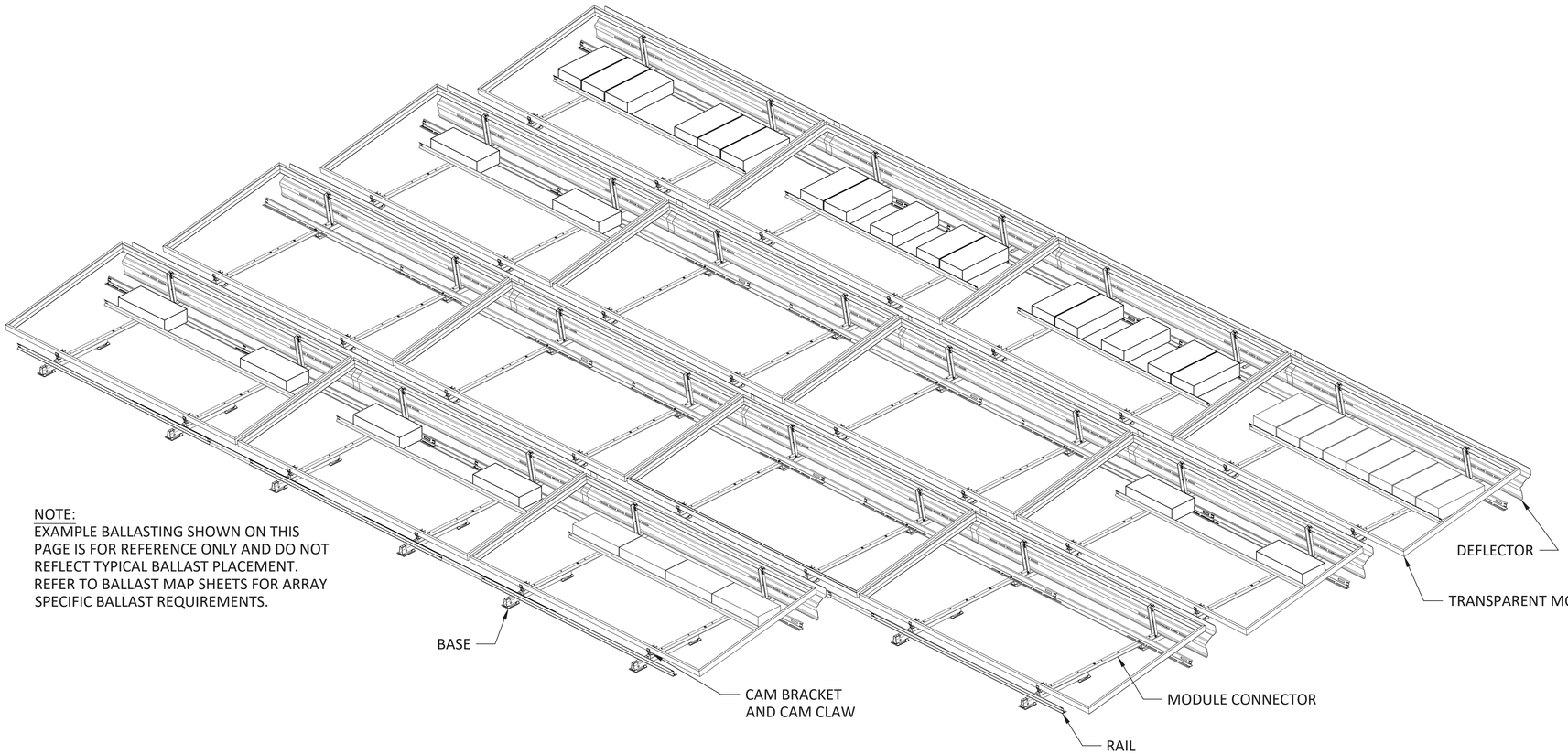

NOTE:
EXAMPLE BALLASTING SHOWN ON THIS PAGE IS FOR REFERENCE ONLY AND DO NOT REFLECT TYPICAL BALLAST PLACEMENT. REFER TO BALLAST MAP SHEETS FOR ARRAY SPECIFIC BALLAST REQUIREMENTS.

EXAMPLE RAIL AND BLOCK CONFIGURATION (A, PC-6)
SCALE: NTS



CAM CLAW (B, PC-6)
SCALE: NTS

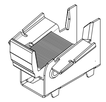

CAM BRACKET (C, PC-6)
SCALE: NTS

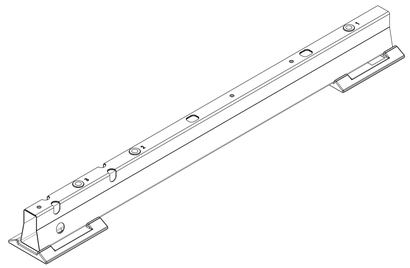

BASE (D, PC-6)
SCALE: NTS

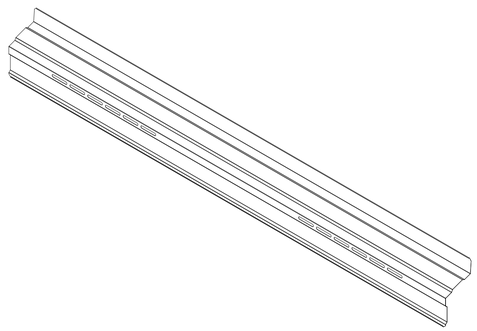

DEFLECTOR (G, PC-6)
SCALE: NTS

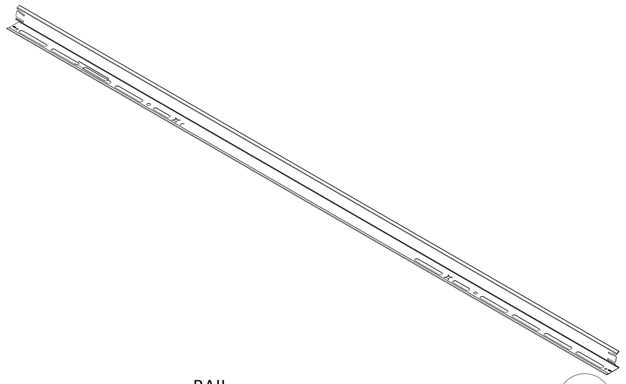

RAIL (F, PC-6)
SCALE: NTS

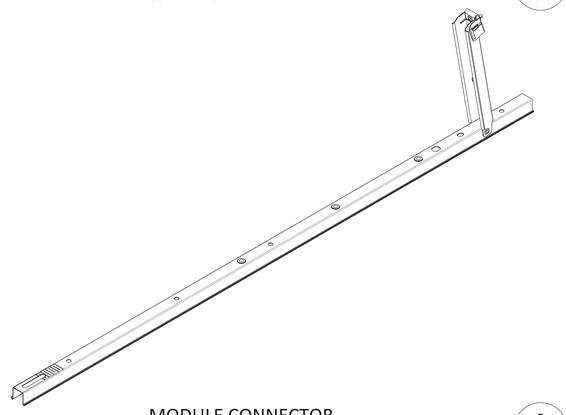

MODULE CONNECTOR (E, PC-6)
SCALE: NTS

NOT APPROVED FOR CONSTRUCTION

STAMP:

PANELCLAW®

RACKING CONSTRUCTION SET

1600 OSGOOD ST. SUITE 2023
NORTH ANDOVER, MA 01845
TEL: 978.688.4900
www.panelclaw.com

© PANELCLAW, INC
ALL INFORMATION CONTAINED WITHIN THIS DOCUMENT IS PROPERTY OF PANELCLAW, INC. THE PURPOSE OF THIS DOCUMENT IS TO FACILITATE THE INSTALLATION OF PANELCLAW SOLAR PHOTOVOLTAIC MOUNTING SYSTEMS. DO NOT COPY OR DISTRIBUTE WITHOUT PERMISSION.

REV	DESCRIPTION	PREP	CHECK	DATE
0	Initial Ballast Map Layout	DH		2023-06-19

SCALE:
0" 1/2" 1" 2"
ORIGINAL SIZE 36"X24"
SHEET SIZE ARCH "D"

PREPARED FOR:
Collins Electrical Company

PROJECT:
San Mateo Medical Center

LOCATION:
222 W 39th Ave, San Mateo, CA 94403, USA

SHEET TITLE:
RACKING COMPONENTS

REVISION: 0

SHEET: PC-6

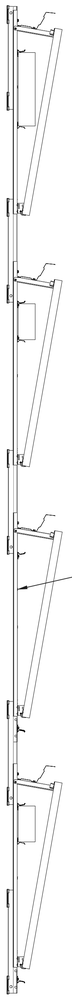

BALLAST QUANTITY:
"#"=QUANTITY OF BALLAST BLOCK INSTALLED CENTERED UNDER MODULE

IF NO BALLAST QUANTITY SHOWN, DO NOT PLACE BALLAST

SEE INSTALLATION MANUAL FOR NOTES ON INSTALLING MORE THAN FOUR BALLAST BLOCKS PER MODULE

DO NOT INSTALL ADDITIONAL RAIL TO HOLD BALLAST ON MODULES WITH NO BALLAST SHOWN.

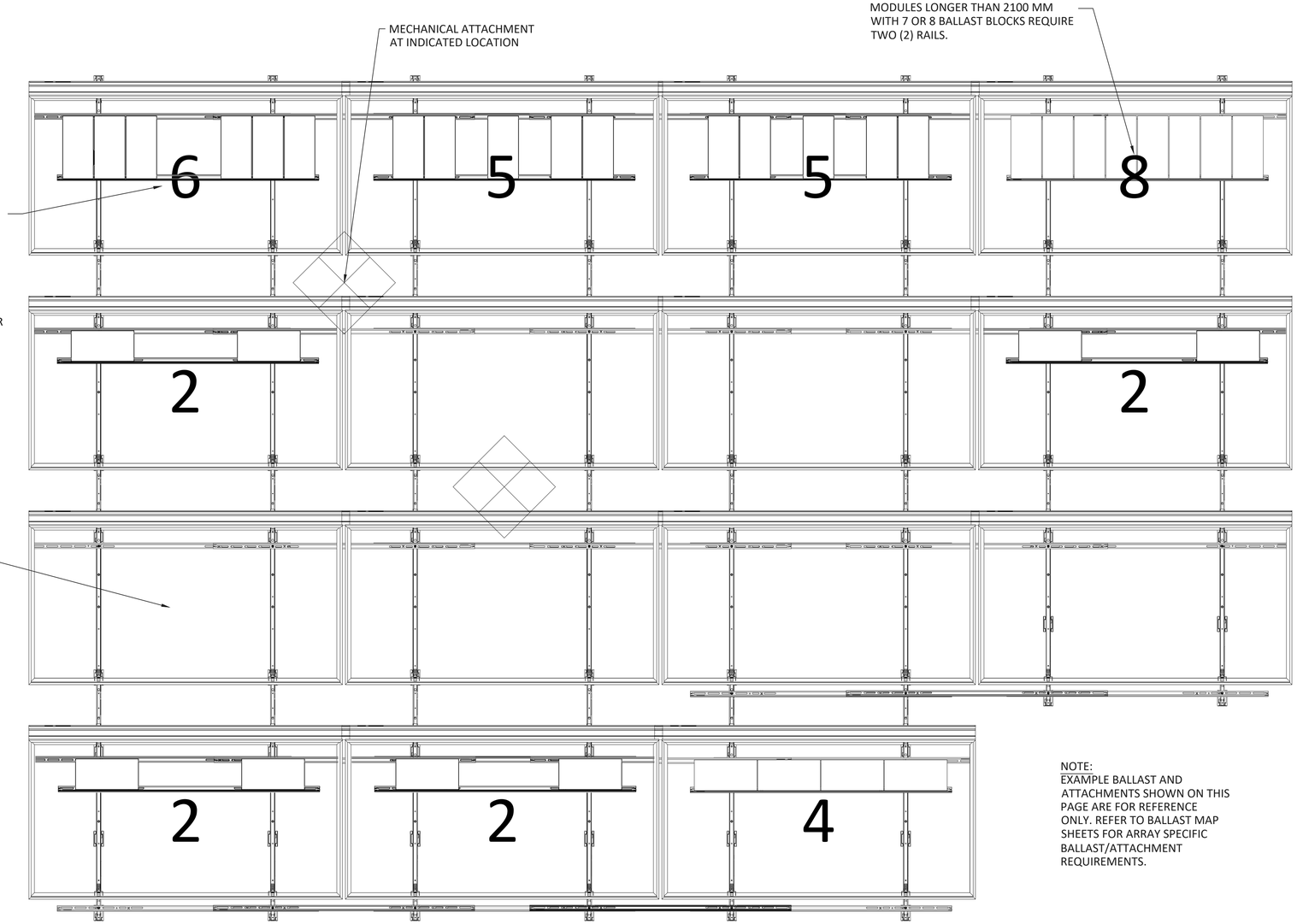

NOTE:
EXAMPLE BALLAST AND ATTACHMENTS SHOWN ON THIS PAGE ARE FOR REFERENCE ONLY. REFER TO BALLAST MAP SHEETS FOR ARRAY SPECIFIC BALLAST/ATTACHMENT REQUIREMENTS.

ARRAY CROSS SECTION VIEW
SCALE: NTS
A PC-7

ARRAY TOP VIEW
SCALE: NTS
B PC-7

NOT APPROVED FOR CONSTRUCTION

STAMP:

PANELCLAW®

RACKING CONSTRUCTION SET

1600 OSGOOD ST. SUITE 2023
NORTH ANDOVER, MA 01845
TEL: 978.688.4900
www.panelclaw.com

© PANELCLAW, INC
ALL INFORMATION CONTAINED WITHIN THIS DOCUMENT IS PROPERTY OF PANELCLAW, INC. THE PURPOSE OF THIS DOCUMENT IS TO FACILITATE THE INSTALLATION OF PANELCLAW SOLAR PHOTOVOLTAIC MOUNTING SYSTEMS. DO NOT COPY OR DISTRIBUTE WITHOUT PERMISSION.

REV	DESCRIPTION	PREP	CHECK	DATE
0	Initial Ballast Map Layout	DH		2023-06-19

SCALE:
0" 1/2" 1" 2"
ORIGINAL SIZE 36"X24"
SHEET SIZE ARCH "D"

PREPARED FOR:
Collins Electrical Company

PROJECT:
San Mateo Medical Center

LOCATION:
222 W 39th Ave, San Mateo, CA 94403, USA

SHEET TITLE:
BALLAST LEGEND

REVISION: 0
SHEET: PC-7

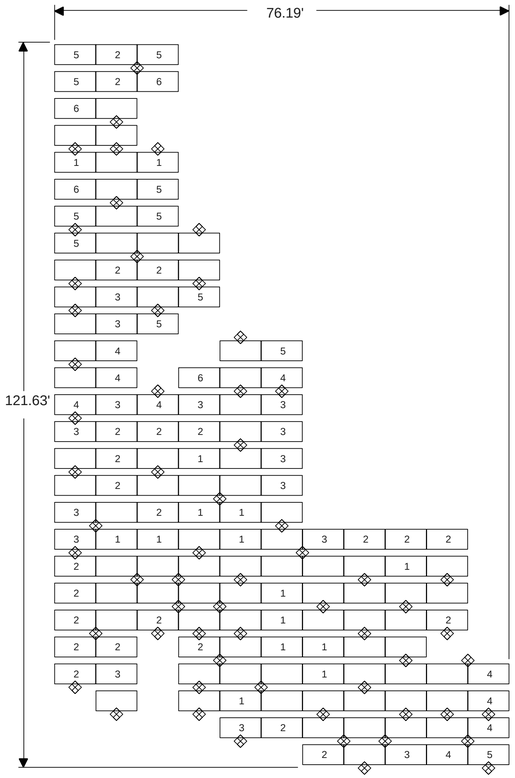

ARRAY 1.1	
ROOF INFORMATION	
ROOF HEIGHT (FT)	45.00
PARAPET HEIGHT (FT)	4.5
ROOF TILT (DEG)	1
ROOF TYPE	TPO
SPECIFICATIONS	
NUMBER OF MODULES	152
MODULE POWER (W)	455
ARRAY OUTPUT (Kw)	69.16
ARRAY AZIMUTH	153
PART QUANTITIES	
ITEM	QTY
Base	334
Module Connector	304
Rail	389
Cam	304
Cam Claw	304
Deflector	152
Base Pad	0
Ballast Block	223
Mechanical Attachment	62
LOADING DETAILS	
SINGLE MODULE WT (LB)	51.8
SINGLE CMU WT (LB)	32.6
TOTAL ARRAY WT (LB)	17810
ARRAY AREA (SQ. FT)	4727
ARRAY LOAD (PSF)	3.77

ASSEMBLY QUANTITIES	
ASSEMBLY	**QTY**
NORTH ASSEMBLY	30
SOUTH ASSEMBLY	30
MIDDLE ASSEMBLY	244
NORTH SOUTH ASSEMBLY	0

BALLAST LAYOUT - 1.1

SCALE: 1/12" = 1'-0"

A
PC-8

NOT APPROVED FOR CONSTRUCTION

STAMP:

PANELCLAW®

RACKING CONSTRUCTION SET

1600 OSGOOD ST. SUITE 2023
NORTH ANDOVER, MA 01845
TEL: 978.688.4900
www.panelclaw.com

© PANELCLAW, INC
ALL INFORMATION CONTAINED WITHIN THIS DOCUMENT IS PROPERTY OF PANELCLAW, INC. THE PURPOSE OF THIS DOCUMENT IS TO FACILITATE THE INSTALLATION OF PANELCLAW SOLAR PHOTOVOLTAIC MOUNTING SYSTEMS. DO NOT COPY OR DISTRIBUTE WITHOUT PERMISSION.

REV	DESCRIPTION	DATE	PREP	CHECK
0	Initial Ballast Map Layout	2023-06-19	DH	

SCALE:
0" 1/2" 1" 2"
ORIGINAL SIZE 36"X24"
SHEET SIZE ARCH "D"

PREPARED FOR:
Collins Electrical Company

PROJECT:
San Mateo Medical Center

LOCATION:
222 W 39th Ave, San Mateo, CA 94403, USA

SHEET TITLE:
BALLAST LAYOUT - 1.1

REVISION: 0

SHEET: PC-8

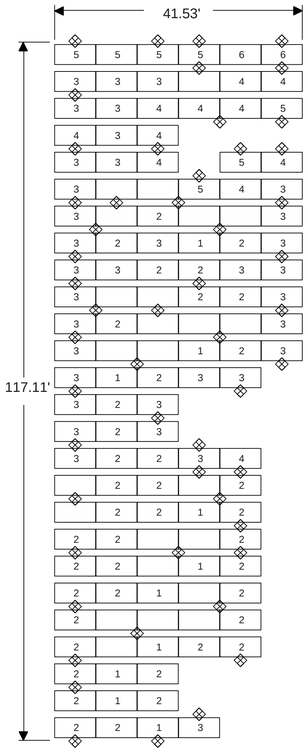

ARRAY 1.2	
ROOF INFORMATION	
ROOF HEIGHT (FT)	45.00
PARAPET HEIGHT (FT)	4.5
ROOF TILT (DEG)	1
ROOF TYPE	TPO
SPECIFICATIONS	
NUMBER OF MODULES	129
MODULE POWER (W)	455
ARRAY OUTPUT (Kw)	58.695
ARRAY AZIMUTH	153
PART QUANTITIES	
ITEM	QTY
Base	282
Module Connector	258
Rail	363
Cam	258
Cam Claw	258
Deflector	129
Base Pad	0
Ballast Block	286
Mechanical Attachment	53
LOADING DETAILS	
SINGLE MODULE WT (LB)	51.8
SINGLE CMU WT (LB)	32.6
TOTAL ARRAY WT (LB)	18328
ARRAY AREA (SQ. FT)	4013
ARRAY LOAD (PSF)	4.57

ASSEMBLY QUANTITIES	
ASSEMBLY	QTY
NORTH ASSEMBLY	22
SOUTH ASSEMBLY	22
MIDDLE ASSEMBLY	212
NORTH SOUTH ASSEMBLY	2

BALLAST LAYOUT - 1.2

SCALE: 1/12" = 1'-0"

A / PC-9

NOT APPROVED FOR CONSTRUCTION

STAMP:

PANELCLAW®

RACKING CONSTRUCTION SET

1600 OSGOOD ST. SUITE 2023
NORTH ANDOVER, MA 01845
TEL: 978.688.4900
www.panelclaw.com

© PANELCLAW, INC
ALL INFORMATION CONTAINED WITHIN THIS DOCUMENT IS PROPERTY OF PANELCLAW, INC. THE PURPOSE OF THIS DOCUMENT IS TO FACILITATE THE INSTALLATION OF PANELCLAW SOLAR PHOTOVOLTAIC MOUNTING SYSTEMS. DO NOT COPY OR DISTRIBUTE WITHOUT PERMISSION.

REV	DESCRIPTION	DATE	PREP	CHECK
0	Initial Ballast Map Layout	2023-06-19	DH	

SCALE: 0" 1/2" 1" 2"

ORIGINAL SIZE 36"X24"
SHEET SIZE ARCH "D"

PREPARED FOR:

Collins Electrical Company

PROJECT:

San Mateo Medical Center

LOCATION:

222 W 39th Ave, San Mateo, CA 94403, USA

SHEET TITLE:

BALLAST LAYOUT - 1.2

REVISION: 0

SHEET: PC-9

NOTE:
THIS DETAIL IS GENERIC IN NATURE AND IS INTENDED ONLY TO SHOW TYPICAL MECHANICAL ATTACHMENT ASSEMBLY LOCATIONS. REFER TO INDIVIDUAL ARRAY LAYOUTS FOR REQUIRED LOCATIONS.

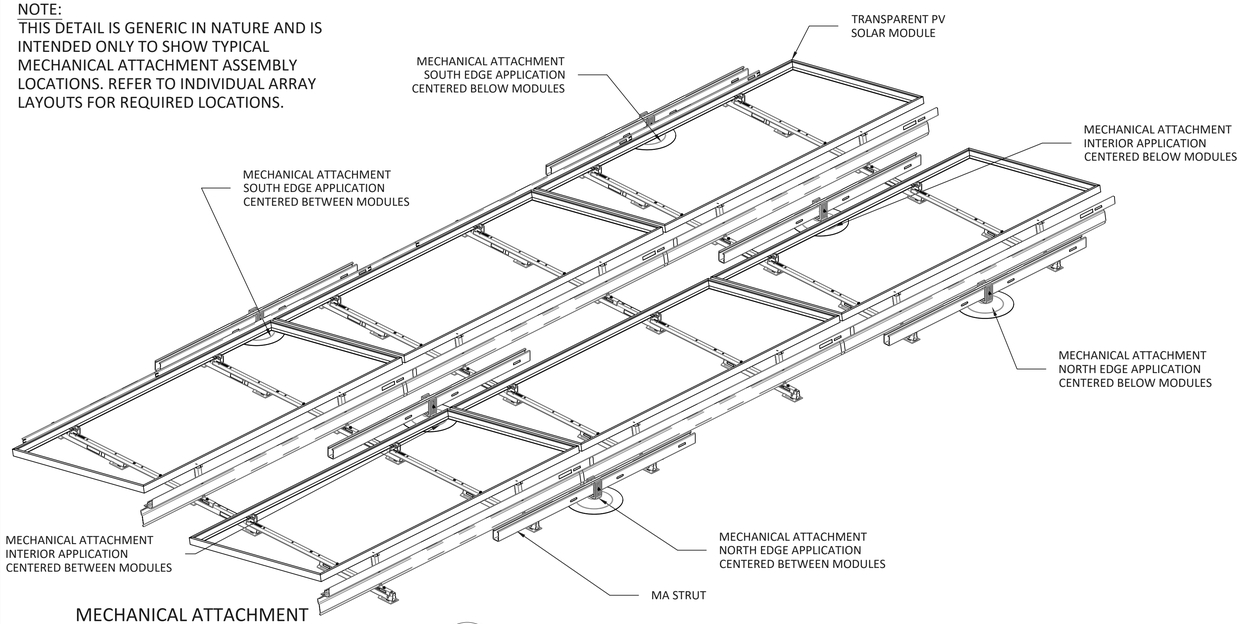

MECHANICAL ATTACHMENT LOCATION DETAIL — A — PC-10

SCALE: N.T.S.

SUSTAINABLE TECHNOLOGIES FACET
MECHANICAL ATTACHMENT:
MANUFACTURED BY OTHERS

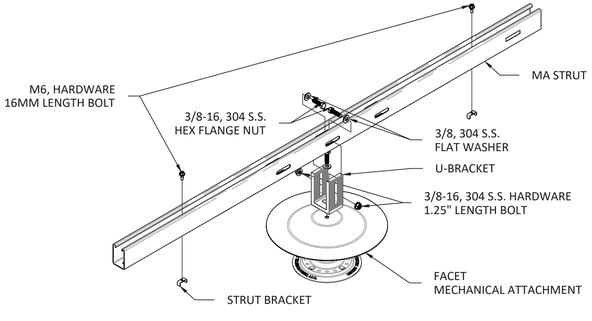

MECHANICAL ATTACHMENT DETAIL — B — PC-10

SCALE: N.T.S.

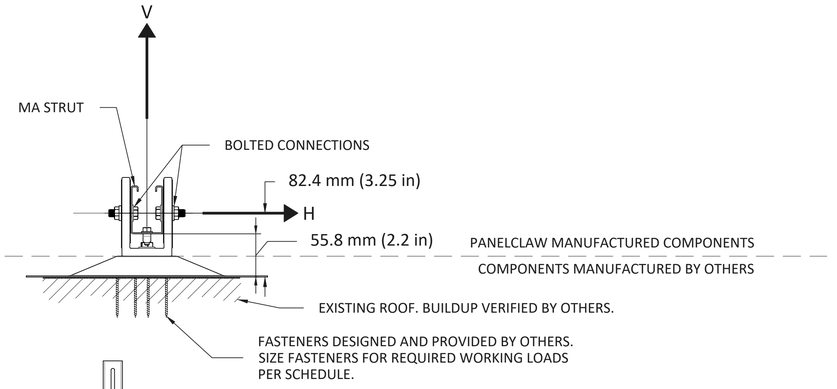

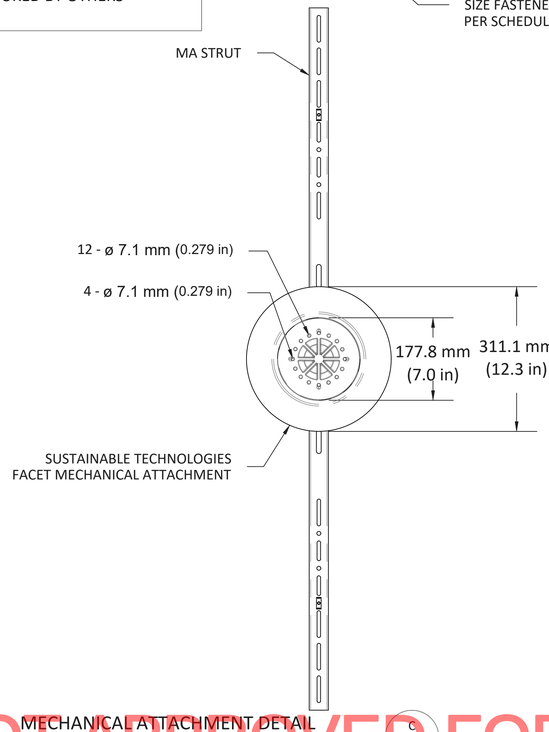

MECHANICAL ATTACHMENT		
WORST-CASE SERVICE LOAD (LB)		
HORIZONTAL (H)		VERTICAL (V)
WIND	SEISMIC	WIND
0	180	326
MAXIMUM ALLOWABLE LOAD (LB)		
HORIZONTAL (H)		VERTICAL (V)
200		525

1. HORIZONTAL LOAD H MAY ACT IN ANY DIRECTION
2. WORKING LOADS = ALLOWABLE LOADS (i.e. NON-FACTORED)

NOTE: MECHANICAL ATTACHMENT COMPONENT DIMENSIONS ARE PROVIDED FOR REFERENCE ONLY AND SHOULD BE VERIFIED WITH ATTACHMENT MANUFACTURER PRIOR TO FASTENER DESIGN.

MECHANICAL ATTACHMENT DETAIL — C — PC-10

SCALE: N.T.S.

NOT APPROVED FOR CONSTRUCTION

STAMP:

PANELCLAW®

RACKING CONSTRUCTION SET

1600 OSGOOD ST. SUITE 2023
NORTH ANDOVER, MA 01845
TEL: 978.688.4900
www.panelclaw.com

© PANELCLAW, INC
ALL INFORMATION CONTAINED WITHIN THIS DOCUMENT IS PROPERTY OF PANELCLAW, INC. THE PURPOSE OF THIS DOCUMENT IS TO FACILITATE THE INSTALLATION OF PANELCLAW SOLAR PHOTOVOLTAIC MOUNTING SYSTEMS. DO NOT COPY OR DISTRIBUTE WITHOUT PERMISSION.

REV	DESCRIPTION	DH	PREP	CHECK	DATE
0	Initial Ballast Map Layout				2023-06-19

SCALE: 0" 1/2" 1" 2"
ORIGINAL SIZE 36"X24"
SHEET SIZE ARCH "D"

PREPARED FOR:
Collins Electrical Company

PROJECT:
San Mateo Medical Center

LOCATION:
222 W 39th Ave, San Mateo, CA 94403, USA

SHEET TITLE:
MECHANICAL ATTACHMENT DETAIL

REVISION: 0

SHEET: PC-10